AC1615S Technical catalog

# Tmax T generation
# Molded case circuit breakers

Power and productivity
for a better world™

# Table of contents
## Tmax

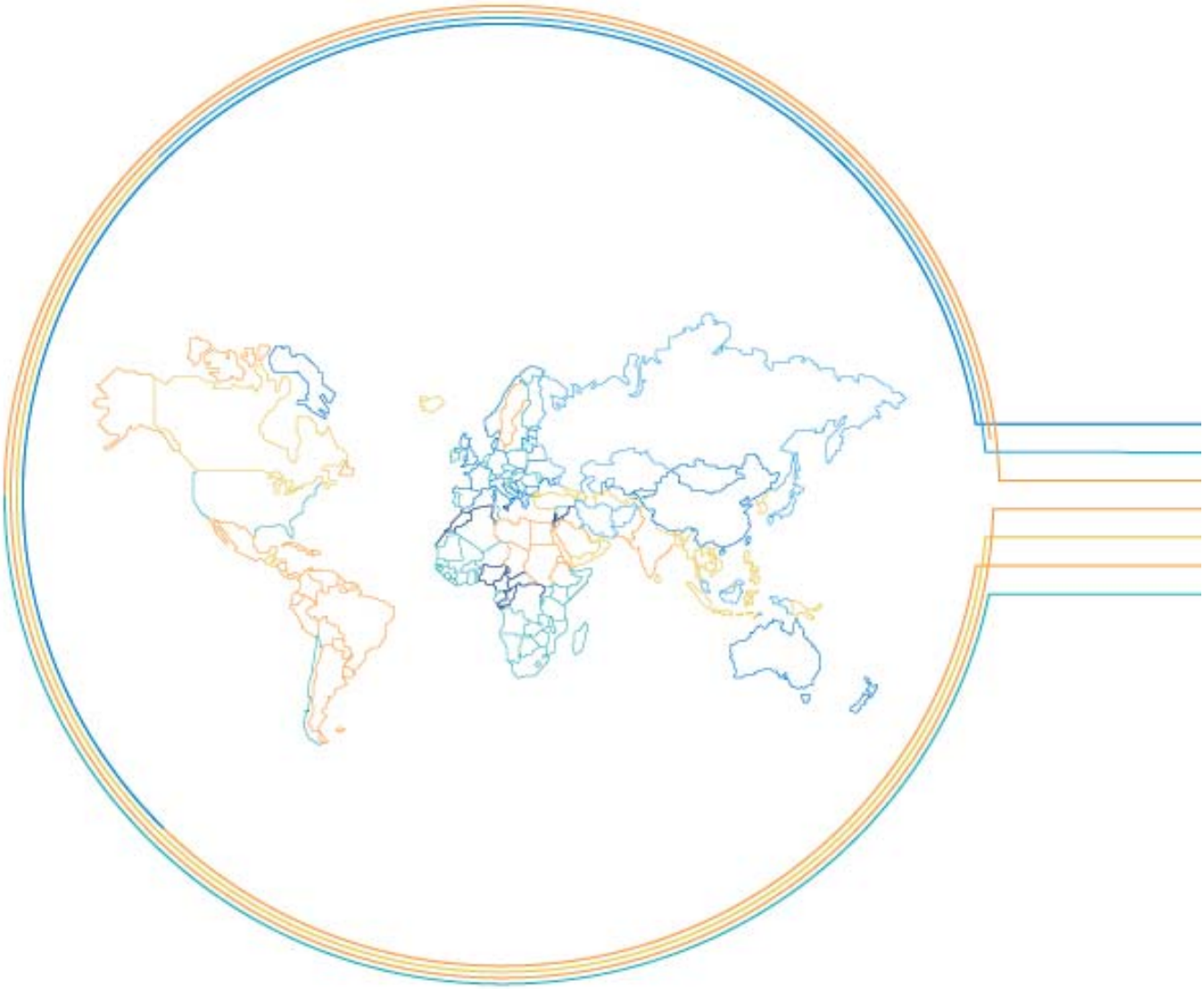

# T Generation
## Tmax. Adaptability and versatility

Tmax is freedom. Freedom now reaching up to 1200 A with the new Tmax T7 circuit breaker. There's a boundless and highly diversified world of differing types of installations, requirements, needs and problems from 15 to 1200 A. With the T Generation everything becomes simple and rational – eight sizes to find the solutions you're looking for.

### BE FREE TO SIZE ANY TYPE OF INSTALLATION IN AN IDEAL WAY AT ALL TIMES.

Thanks to the eight sizes and a complete series of magnetic only, thermal magnetic and electronic trip units. Also a wide range of accessories are available together with the possibility of selecting dedicated families for all market applications, even the most specific and advanced.

### BE FREE TO INSTALL ALL SIZES WITHOUT DIFFICULTY.

T Generation is undeniably the family of molded case circuit breakers with the best performance/size ratio available on the market.

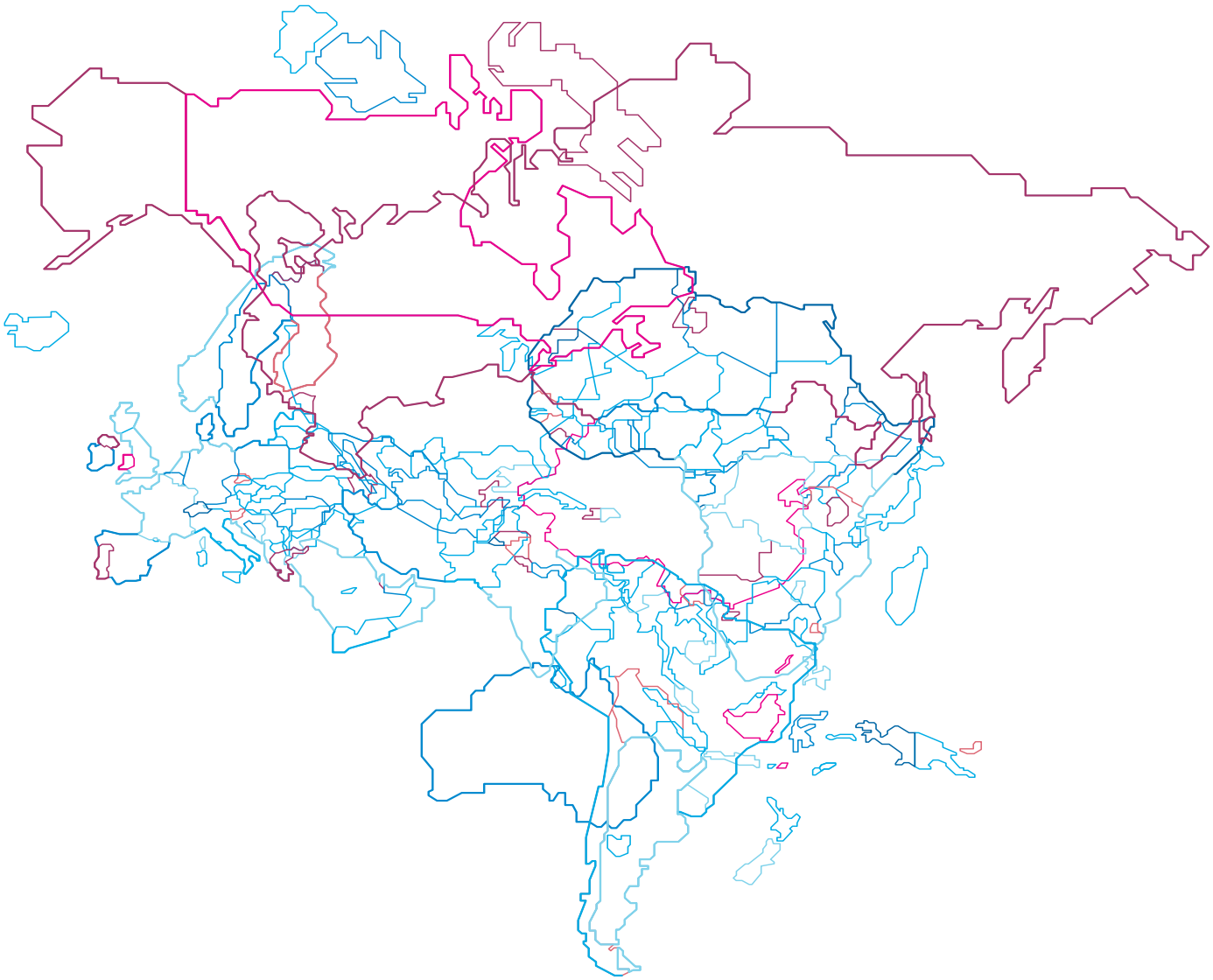

This means there is more space there is for cabling and simpler installation. There is also a reduction in the dimensions of the switchboard.

## BE FREE TO RIDE THE MOST ADVANCED TECHNOLOGY.

It is thanks to this technology that T Generation now offers performance levels that were previously out of the question in circuit breakers with these dimensions. There are also some exclusive technical solutions which only ABB can offer you, such as the brand new UL 489 supplement SE electronic trip units designed for the new Tmax T7 or the new rapid accessory fitting system.

## FREEDOM FOR TOTALLY SAFE SELECTION.

The safety of knowing that behind Tmax there is ABB's strong and constant commitment to the search for excellence at the base of each product and service. ABB quality.

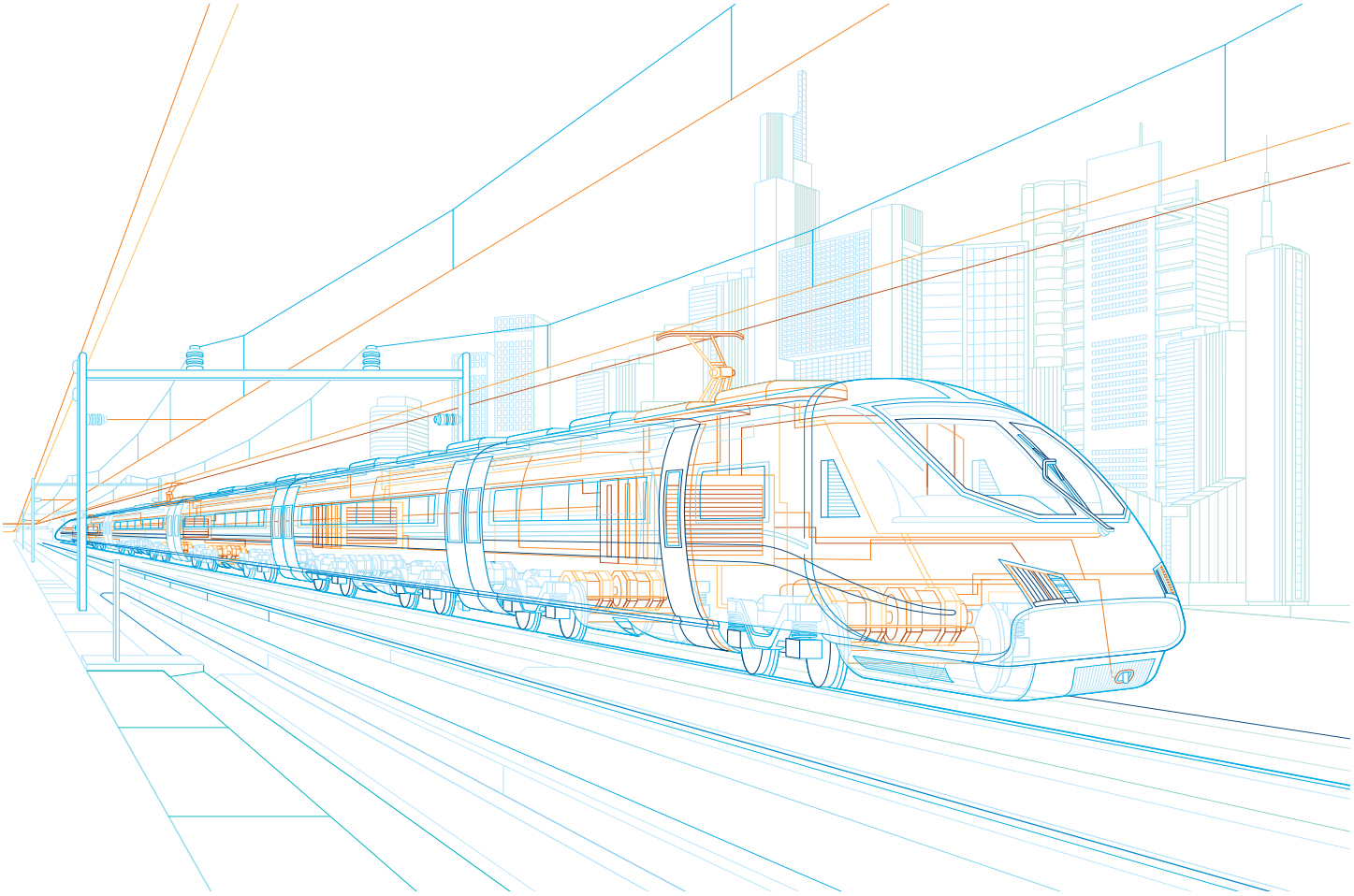

# Tmax T1, T2, Ts3 and T3
## All solutions perfectly coordinated, up to 225 A.

Tmax T1, T2, Ts3 and T3 – the four “little ones” of the Tmax family – were thought up from the beginning to work together. You can select functions and performances which until now could not be found in circuit breakers with these dimensions. Perfect up to 225 A.
There are many characteristics common to the T1, T2 and T3 frames. The single depth 2.76" (70 mm) of the three frames makes installation truly simpler. The new arcing chambers are produced with a gasifying material and an innovative construction system allows the arc extinction time to be reduced.
All three sizes are fitted with standard adjustment of the thermal threshold and have new three-pole and four-poles designed and constructed to optimize space in the switchboard and simplify coupling with the circuit breaker.
Tmax T1, T2 and T3 have a completely standardized range of accessories.

### TMAX T1. THE LITTLE ONE THAT'S REALLY BIG.

Thanks to its extremely compact dimensions, Tmax T1 is a unique circuit breaker in its category. Compared to any other circuit breaker with the same performance (100 A – up to 50 kA at 240 VAC), the overall dimensions of the apparatus are notably smaller.

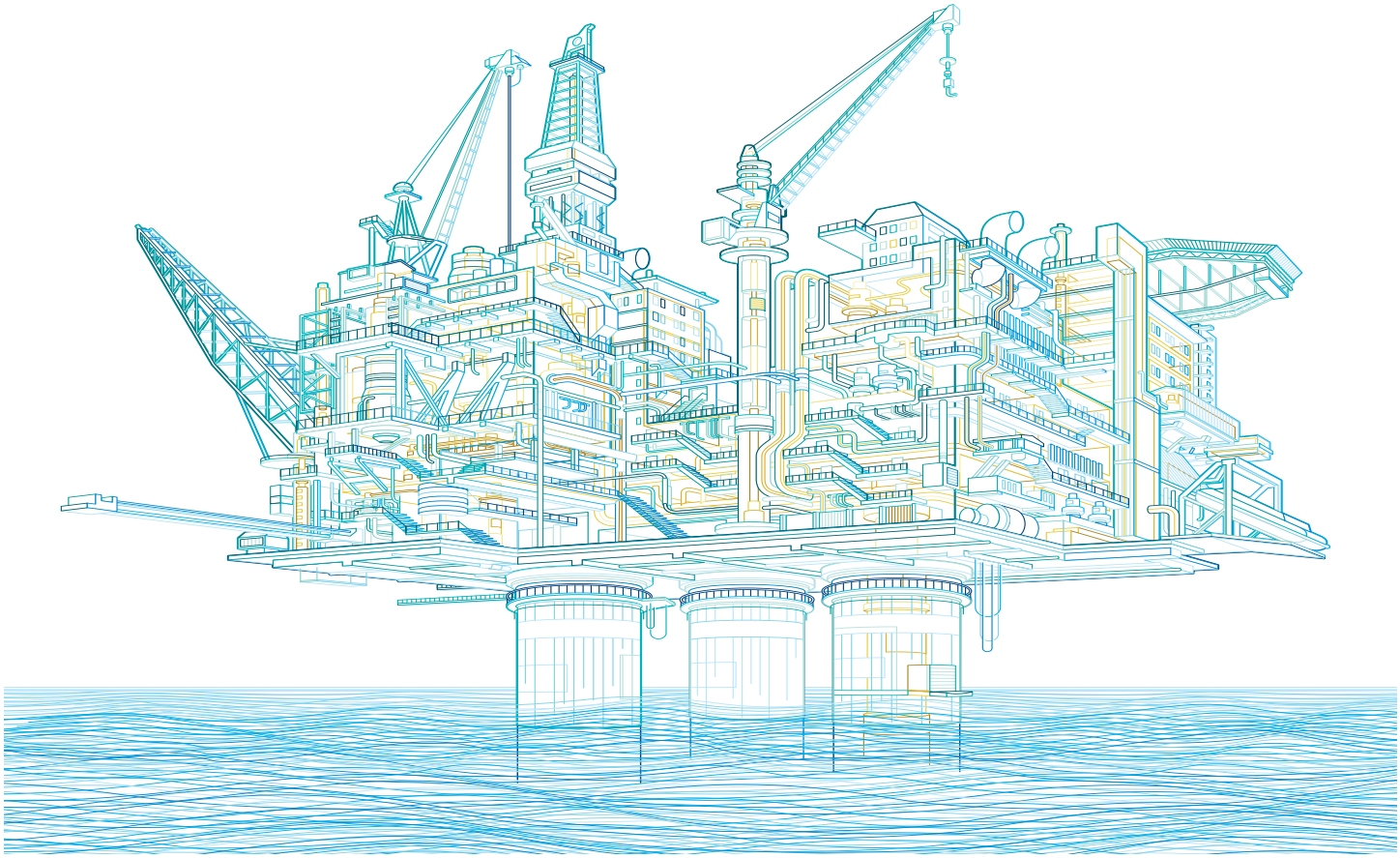

## TMAX T2. INTELLIGENCE AND HIGH PERFORMANCE IN THE PALM OF YOUR HAND.

Tmax T2 is the only 100 A circuit breaker available with such high performances in such compact overall dimensions. A breaking capacity of 150 kA at 240 VAC can be achieved. Tmax T2 can also be fitted with a latest generation electronic trip unit.

## TMAX T3. 225 A IN A DEPTH OF 2.76" (70 MM) FOR THE FIRST TIME.

Tmax T3 is the first circuit breaker which carries 225 A in considerably smaller overall dimensions compared to any other similar device – a large step forward for this type of breaker.

## TMAX Ts3

ABB Tmax Ts3 circuit breaker, in the 150 A frame, can be used at 600 VAC providing excellent interrupting rating performance. The possibility of having circuit breakers certified for use at this voltage allows perfect standardization of the apparatus both on the US and the Canadian market, where 600 V is most widely used.

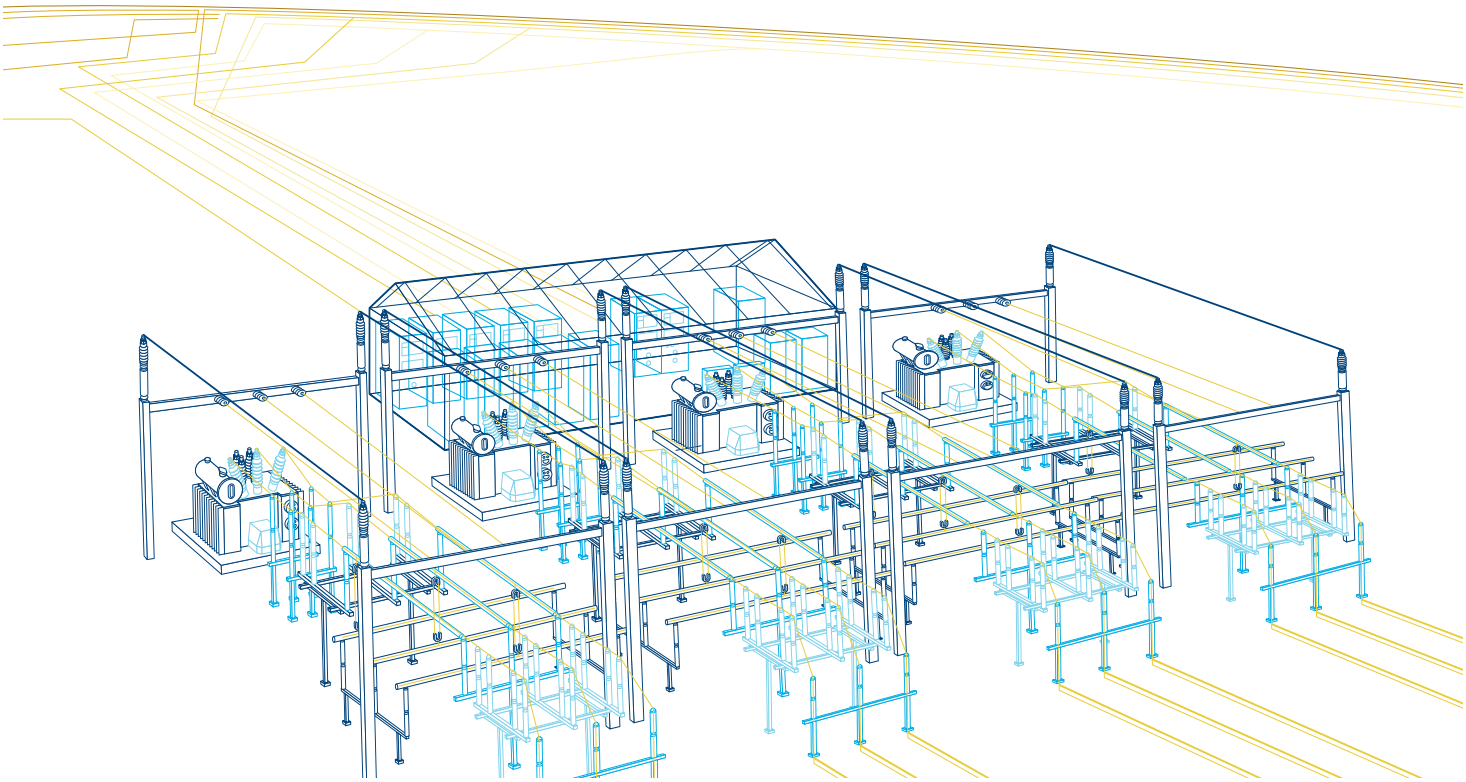

# Tmax T4, T5 and T6
## Be free to choose up to 800 A.

Tmax T4, T5 and T6 are the molded case circuit breakers with the best performance/size ratio on the market. The possibilities are practically unlimited, thanks to their dedicated and specific ranges, advanced electronics, as well as a complete and standardized range of accessories.

The top quality materials and innovative construction techniques used by ABB mean Tmax circuit breakers can guarantee truly exceptional performance. For example, T4 and T5 have an interrupting capacity up to 150 kA at 480 VAC.

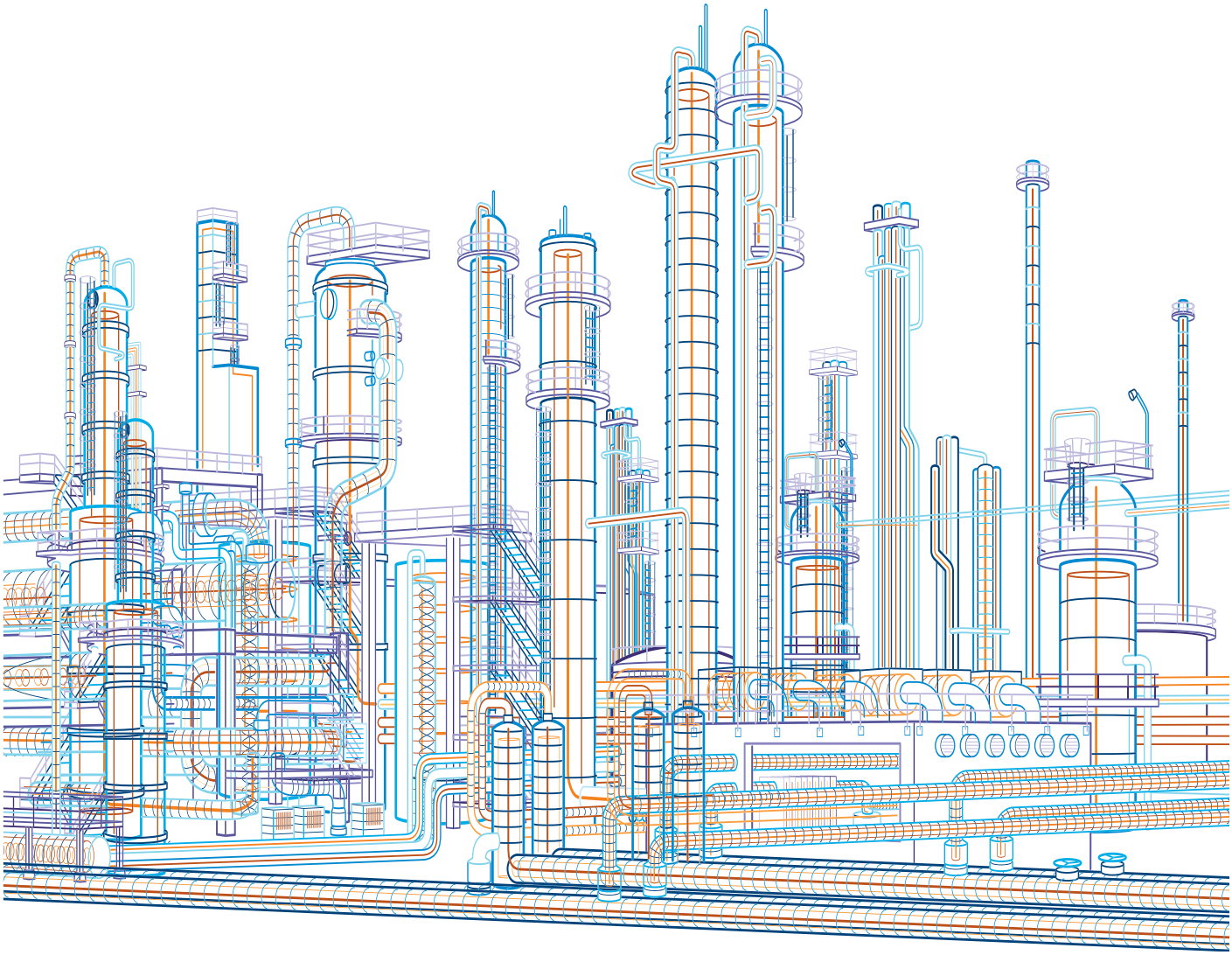

The series of electronic trip units, equipped with latest generation technology, offers solutions exclusive to ABB. T4, T5 and T6 have the same depth, simplifying their use in switchboards, and also have a complete, standardized and unified range of accessories, simplifying selection, making them more flexible and reducing stock item count.

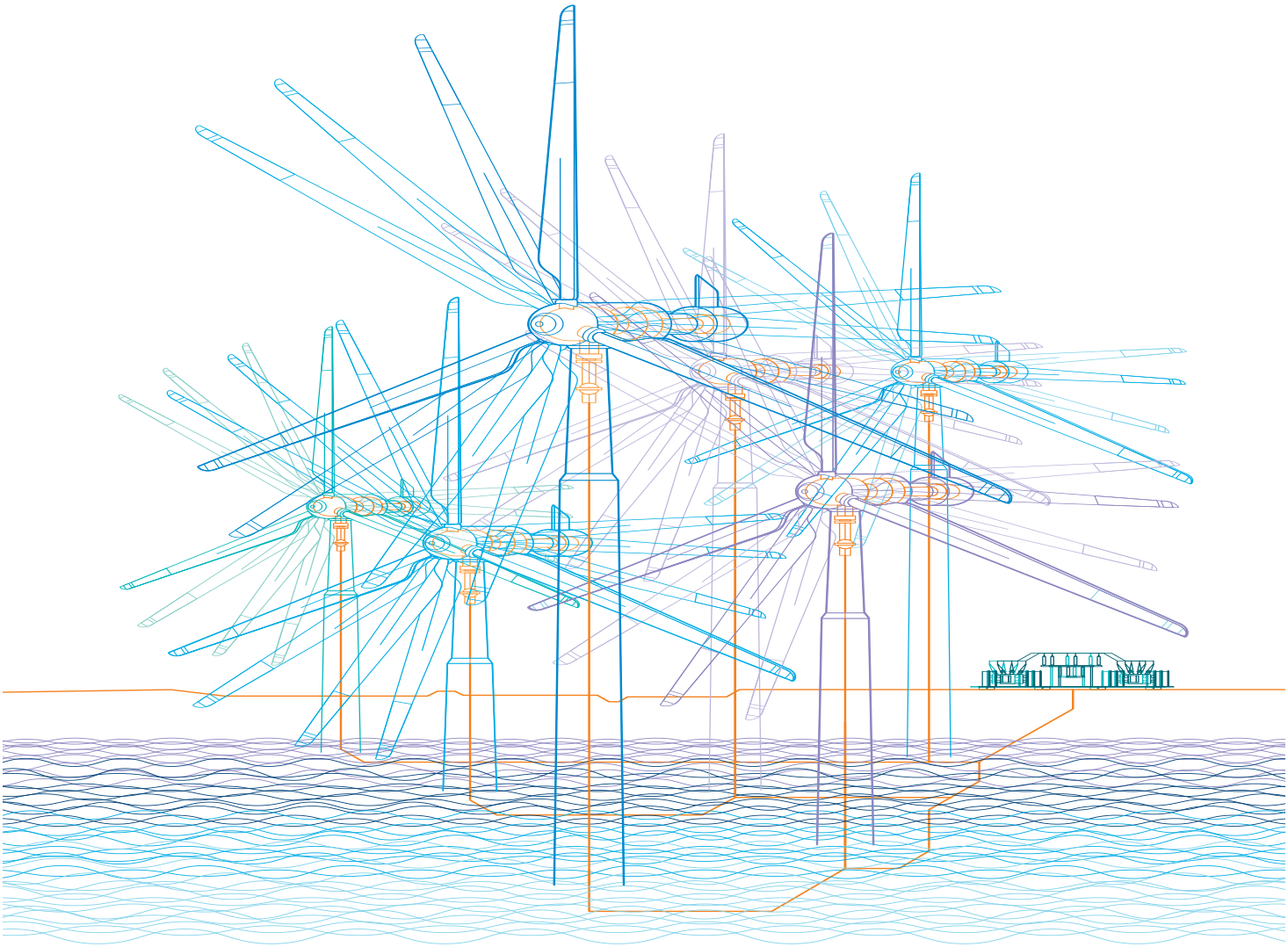

# Tmax T7
## Freedom to the N$^{th}$ degree.

The new Tmax T7, available up to 1200 A either with a manual operating mechanism or motor operator, was conceived with a revolutionary design for circuit breakers of this type: advanced electronics, exceptional performance and new installation and accessory solutions.

Tmax T7's flexibility is absolutely exceptional: it can be installed both vertically and horizontally (in both fixed and draw out versions) with all types of terminals and a new, faster and safer racking-out system for moving parts.

Additionally, cabling is facilitated by the reduced height. The new rapid accessory wiring system is great news. There are no loose wires inside the circuit breaker. Connection to the external circuit is rapid, simple and safe and no screws for terminating  the external power supply cables are needed.

The new cable interlock provides notable benefits in terms of flexible applications. By using this accessory it is possible to interlock two circuit breakers in any position and to interlock a T7 with an Emax power circuit breaker as well.

Special attention has been paid to the electronics and the results are the PR231, PR232, PR331 and PR332 new interchangeable electronic trip units, with modules and rating-plugs which can be replaced by the customer.

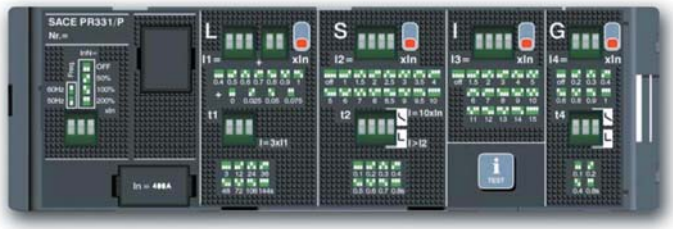


The PR231 and PR232 trip units, with dip-switches for setting the protection thresholds, offer LEDs to signal tripping for each protection function: so the reason for circuit breaker tripping can always be easily found.
The PR332 is decidedly ahead of its time fitted with a large graphic display, it allows all the information needed to be displayed simply and clearly. It also offers advanced protection functions. For example, the exclusive data logger function allows all the events and values before the fault to be recorded for later analysis.

# Table of contents
## Tmax main characteristics

# Tmax molded case circuit breakers
## Overview of the Tmax family

## MCCB

| Breaker type | | T1 1p | T1 | T2 | | T3 | | Ts3 | | | Ts3 | | |
|---|---|---|---|---|---|---|---|---|---|---|---|---|---|
| Frame size | [A] | 100 | 100 | 100 | | 225 | | 150 | | | 225 | | |
| Number of poles | [No.] | 1 | 3-4 | 3-4 | | 3-4 | | 2-3-4 | | | 2-3-4 | | |
| Rated voltage | AC (50-60 Hz) [V] | 347 | 600Y/347 | 480 | | 600Y/347 | | 600 | | | 480 | | |
| | DC [V] | - | 500 | - | | 500 | | 600 | | | 500 | | |
| Interrupting ratings | Frame type | B | N | S | H | N | S | N | H | L | N | H | L |
| | 240 V AC [kA rms] | - | 50(2) | 65 | 150 | 50 | 65 | 65 | 100 | 150 | 65 | 100 | 150 |
| | 277 V AC [kA rms] | 18(1) | - | - | - | - | - | - | - | - | - | - | - |
| | 347 V AC [kA rms] | 14(1) | - | - | - | - | - | - | - | - | - | - | - |
| | 480 V AC [kA rms] | - | 22(2) | 35 | 65 | 25 | 35 | 25 | 50 | 85(3) | 25 | 50 | 65 |
| | 600Y/347 V AC [kA rms] | - | 10 | - | - | 10 | 10 | - | - | - | - | - | - |
| | 600 V AC [kA rms] | - | - | - | - | - | - | 14 | 14 | 25 | - | - | - |
| | 250 V DC (2 poles in series) [kA rms] | - | 25 | - | - | 25 | 35 | - | - | - | - | - | - |
| | 500 V DC (3 poles in series) [kA rms] | - | 25 | - | - | 25 | 35 | - | - | - | - | - | - |
| | 500 V DC (2 poles in series) [kA rms] | - | - | - | - | - | - | 35 | 50 | 65 | 20 | 35 | 50 |
| | 600 V DC (3 poles in series) [kA rms] | - | - | - | - | - | - | 20 | 35 | 50 | - | - | - |
| Trip units | TMF | • | • | • | | • | | • | | | • | | |
| | TMD/TMA | - | - | - | | - | | - | | | - | | |
| | MA | - | - | • | | • | | • | | | • | | |
| | Electronic PR221DS | - | - | • | | - | | - | | | - | | |
| | Electronic PR222DS/P | - | - | - | | - | | - | | | - | | |
| | Electronic PR222DS/PD-A | - | - | - | | - | | - | | | - | | |
| | Electronic PR231/P | - | - | - | | - | | - | | | - | | |
| | Electronic PR232/P | - | - | - | | - | | - | | | - | | |
| | Electronic PR331/P | - | - | - | | - | | - | | | - | | |
| | Electronic PR332/P | - | - | - | | - | | - | | | - | | |
| Dimensions | H [in/mm] | 5.12/130 | 5.12/130 | 5.12/130 | | 5.9/150 | | 6.7/170 | | | 6.7/170 | | |
| | W 3p [in/mm] | 1/25.4 | 3/76 | 3.54/90 | | 4.13/105 | | 4.13/105 | | | 4.13/105 | | |
| | D [in/mm] | 2.76/70 | 2.76/70 | 2.76/70 | | 2.76/70 | | 4.07/103.5 | | | 4.07/103.5 | | |
| Mechanical life | [No. operations] | 25000 | 25000 | 25000 | | 25000 | | 25000 | | | 25000 | | |

**(1) In 15A = 10 kA at 277V AC - 10 kA at 347V AC**
**(2) In 15A = 35 kA at 240V AC - 14 kA at 480Y/277V AC**
**(3) In 15A up to 30A = 65kA at 480V AC**

## MCP

| Breaker type | | T2 | | T3 | Ts3 | | |
|---|---|---|---|---|---|---|---|
| Frame size | [A] | 100 | | 225 | 150 | | |
| Number of poles | [No.] | 3 | | 3 | 2-3-4 | | |
| Ratings | [A] | 20...100 | | 100...200 | 3...25 | 50...150 | 175...200 |
| Interrupting ratings | Frame type | S | H | S | L | L | L |
| | 240 V AC [kA rms] | 65 | 150 | 65 | 50 | 150 | 150 |
| | 480 V AC [kA rms] | 35 | 65 | 35 | 25 | 85 | 65 |
| | 600Y/347 V AC [kA rms] | - | - | 10 | - | - | - |
| | 600 V AC [kA rms] | - | - | - | 10 | 25 | - |
| | 500 V DC (3 poles in series) [kA rms] | - | - | 35 | 65(1) | 65 | 50 |
| | 600 V DC (3 poles in series) [kA rms] | - | - | - | 50 | 50 | - |
| Trip units | Magnetic only adjustable (6...12xIn) | • | | • | - | | |
| | Magnetic only adjustable (4...12xIn) | - | | - | • | | |

**(1) Only for 25A rating**

## MCS

| Breaker type | | T1N | T3S | T3S | Ts3H | Ts3H |
|---|---|---|---|---|---|---|
| Frame size | [A] | 100 | 150 | 225 | 150 | 225 |
| Number of poles | [No.] | 3-4 | 3-4 | 3-4 | 3-4 | 3-4 |
| Magnetic override | [A] | 1000 | 1500 | 2250 | 1500 | 2250 |
| Rated voltage | AC (50-60 Hz) [V] | 600Y/347 | 600Y/347 | 600Y/347 | 600 | 480 |
| | DC [V] | 500 | 500 | 500 | 600 | 500 |

# Tmax molded case circuit breakers
## Overview of the Tmax family

### MCCB

| Breaker type | | T4 | | | | | T5 | | | | | T6 | | | |
|---|---|---|---|---|---|---|---|---|---|---|---|---|---|---|---|
| Frame size | [A] | 250 | | | | | 400-600(1) | | | | | 800 | | | |
| Number of poles | [No.] | 2(2)-3-4 | | | | | 2(2)-3-4 | | | | | 3-4 | | | |
| Rated voltage | AC (50-60 Hz) [V] | 600 | | | | | 600 | | | | | 600 | | | |
| | DC [V] | 600 | | | | | 600 | | | | | 600 | | | |
| Interrupting ratings | Frame type | N | S | H | L | V | N | S | H | L | V | N | S | H | L |
| | 240 V AC [kA rms] | 65 | 100 | 150 | 200 | 200 | 65 | 100 | 150 | 200 | 200 | 65 | 100 | 200 | 200 |
| | 277 V AC [kA rms] | - | - | - | - | - | - | - | - | - | - | - | - | - | - |
| | 347 V AC [kA rms] | - | - | - | - | - | - | - | - | - | - | - | - | - | - |
| | 480 V AC [kA rms] | 25 | 35 | 65 | 100 | 150 | 25 | 35 | 65 | 100 | 150 | 35 | 50 | 65 | 100 |
| | 600Y/347 V AC [kA rms] | - | - | - | - | - | - | - | - | - | - | - | - | - | - |
| | 600 V AC [kA rms] | 18 | 25 | 35 | 65 | 100 | 18 | 25 | 35 | 65 | 100 | 20 | 25 | 35 | 42 |
| | 250 V DC (2 poles in series) [kA rms] | - | - | - | - | - | - | - | - | - | - | - | - | - | - |
| | 500 V DC (3 poles in series) [kA rms] | - | - | - | - | - | - | - | - | - | - | - | - | - | - |
| | 500 V DC (2 poles in series) [kA rms] | 25 | 35 | 50 | 65 | 100 | 25 | 35 | 50 | 65 | 100 | 35 | 35 | 50 | 65 |
| | 600 V DC (3 poles in series) [kA rms] | 16 | 25 | 35 | 50 | 65 | 16 | 25 | 35 | 50 | 65 | 20 | 20 | 35 | 50 |
| Trip units | TMF | • | | | | | - | | | | | - | | | |
| | TMD/TMA | • | | | | | • | | | | | • | | | |
| | MA | - | | | | | - | | | | | - | | | |
| | Electronic PR221DS | - | | | | | - | | | | | - | | | |
| | Electronic PR222DS/P | • | | | | | • | | | | | • | | | |
| | Electronic PR222DS/PD-A | • | | | | | • | | | | | • | | | |
| | Electronic PR231/P | • | | | | | • | | | | | • | | | |
| | Electronic PR232/P | - | | | | | - | | | | | - | | | |
| | Electronic PR331/P | - | | | | | - | | | | | - | | | |
| | Electronic PR332/P | - | | | | | - | | | | | - | | | |
| Dimensions | H [in/mm] | 8.07/205 | | | | | 8.07/205 | | | | | 10.55/268 | | | |
| | W 3p [in/mm] | 4.13/105 | | | | | 5.51/140 | | | | | 8.26/210 | | | |
| | D [in/mm] | 4.07/103.5 | | | | | 4.07/103.5 | | | | | 4.07/103.5 | | | |
| Mechanical life | [No. operations] | 20000 | | | | | 20000 | | | | | 20000 | | | |

**(1) T5 600 with electronic trip units only and in 3 pole version**
**(2) 2P only available in the N interrupting rating**

### MCP

| Breaker type | | T4 | | | | T5 | | | | T6 | | | |
|---|---|---|---|---|---|---|---|---|---|---|---|---|---|
| Frame size | [A] | 250 | | | | 400-600 | | | | 800 | | | |
| Number of poles | [No.] | 3 | | | | 3 | | | | 3 | | | |
| Ratings | [A] | 100-150-250 | | | | 300-400-600 | | | | 600-800 | | | |
| Interrupting ratings | Frame type | N | S | H | L | N | S | H | L | N | S | H | L |
| | 240 V AC [kA rms] | 65 | 100 | 150 | 200 | 65 | 100 | 150 | 200 | 65 | 100 | 200 | 200 |
| | 480 V AC [kA rms] | 25 | 35 | 65 | 100 | 25 | 35 | 65 | 100 | 35 | 50 | 65 | 100 |
| | 600Y/347 V AC [kA rms] | - | - | - | - | - | - | - | - | - | - | - | - |
| | 600 V AC [kA rms] | 18 | 25 | 35 | 65 | 18 | 25 | 35 | 65 | 20 | 25 | 35 | 42 |
| | 500 V DC (3 poles in series) [kA rms] | - | - | - | - | - | - | - | - | - | - | - | - |
| | 600 V DC (3 poles in series) [kA rms] | - | - | - | - | - | - | - | - | - | - | - | - |
| Trip units | Electronic PR221DS-I | • | | | | • | | | | • | | | |

### MCS

| Breaker type | | T4N-S-H-L-V | T5N-S-H-L-V | T6H |
|---|---|---|---|---|
| Frame size | [A] | 250 | 400-600 | 800 |
| Number of poles | [No.] | 3-4 | 3-4 | 3-4 |
| Magnetic override | [A] | 3000 | 5000 | 10000 |
| Rated voltage | AC (50-60 Hz) [V] | 600 | 600 | 600 |
| | DC [V] | 600 | 600 | 600 |

# Tmax molded case circuit breakers
## Overview of the Tmax family

## MCCB

| Breaker type | | T7 | | | T8 |
|---|---|---|---|---|---|
| Frame size | [A] | 1000-1200 | | | 1600-2000-2500-3000 |
| Number of poles | [No.] | 3-4 | | | 3-4 |
| Rated voltage | AC (50-60 Hz) [V] | 600 | | | 600 |
| | DC [V] | - | | | - |
| Interrupting ratings | Frame type | S | H | L | V |
| | 240 V AC [kA rms] | 65 | 100 | 150 | 125 |
| | 277 V AC [kA rms] | - | - | - | - |
| | 347 V AC [kA rms] | - | - | - | - |
| | 480 V AC [kA rms] | 50 | 65 | 100 | 125 |
| | 600Y/347 V AC [kA rms] | - | - | - | - |
| | 600 V AC [kA rms] | 25 | 50 | 65 | 125 |
| | 250 V DC (2 poles in series) [kA rms] | - | - | - | - |
| | 500 V DC (3 poles in series) [kA rms] | - | - | - | - |
| | 500 V DC (2 poles in series) [kA rms] | - | - | - | - |
| | 600 V DC (3 poles in series) [kA rms] | - | - | - | - |
| Trip units | TMF | - | | | - |
| | TMD/TMA | - | | | - |
| | MA | - | | | - |
| | Electronic PR221DS | - | | | - |
| | Electronic PR222DS/P | - | | | - |
| | Electronic PR222DS/PD-A | - | | | - |
| | Electronic PR231/P | • | | | - |
| | Electronic PR232/P | • | | | - |
| | Electronic PR331/P | • | | | • |
| | Electronic PR332/P | • | | | • |
| Dimensions | H [in/mm] | 10.55/268 | | | 15/382 |
| | W 3p [in/mm] | 8.26/210 | | | 16.8/427 |
| | D [in/mm] | 6.06/154 (toggle) - 7/178 (motorized) | | | 11.2/282 |
| Mechanical life | [No. operations] | 10000 | | | 15000 |

## MCS

| Breaker type | | T7 | T8 |
|---|---|---|---|
| Frame size | [A] | 1200 | 2000-2500-3000 |
| Number of poles | [No.] | 3-4 | 3-4 |
| Magnetic override | [A] | 20000 | 40000 |
| Rated voltage | AC (50-60 Hz) [V] | 600 | 600 |
| | DC [V] | - | - |

# Tmax molded case circuit breakers
## Distinguishing features of the series

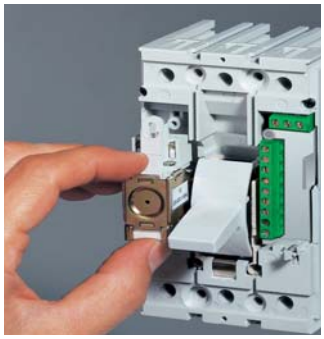

### Double insulation

Tmax has double insulation between the live power parts (excluding the terminals) and the front of the apparatus where the operator works during normal operation of the device. The placement of each electrical accessory is completely segregated from the power circuit, preventing any risk of contact with live parts and the operating mechanism is completely insulated from the powered circuits.

Furthermore, the circuit breaker has oversized insulation, both between the live internal parts and in the area of the connection terminals. In fact, the distances exceed those required by the IEC Standards and comply with the UL 489 Standard.


### Positive operation

The operating lever always indicates the precise position of the moving contacts of the circuit breaker, thereby providing safe and reliable signals, in compliance with IEC 60073 and IEC 60417-2 Standard (I = Closed; O = Open; yellow-green line = Open due to protection trip). The circuit breaker operating mechanism is trip free regardless of the pressure on the lever. Protection tripping automatically opens the moving contacts: to close them again the operating mechanism must be reset by pushing the operating lever from the tripped position into the reset position.


### Isolation behaviour

In the open position, the circuit breaker complies with the IEC 60947-2 Standard. The oversized insulation distances guarantee there are no leakage currents and dielectric resistance to any overvoltages between input and output.

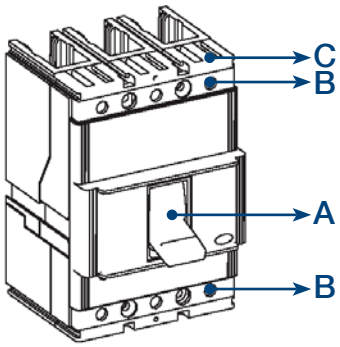


### Degrees of protection

The table indicates the degrees of protection guaranteed by the Tmax circuit breakers according to the IEC 60529 Standard:

| Type | With front | Without front [2] | Without terminal covers | With high terminal covers | With low terminal covers | With IP40 protection kit on the front |
|---|---|---|---|---|---|---|
| A | IP 40[3] | IP 20 | – | – | – | – |
| B[4] | IP 20 | IP 20 | IP 20 | IP 40 | IP 40 | IP 40 |
| C | – | – | – | IP 40[1] | IP 30[1] | – |

[1] After correct installation
[2] During installation of the electrical accessories
[3] Also for front for lever operating mechanism and direct rotary handle
[4] Only for T1...T6

The cradles are always preset with IP20 degree of protection. IP54 degree of protection can be obtained with the circuit breaker installed in a switchboard fitted with a rotary handle operating mechanism transmitted on the compartment door and special kit (RHE – IP54).

# Tmax molded case circuit breakers
# Distinguishing features of the series

## Operating temperature

The Tmax circuit breakers can be used in ambient conditions where air temperature varies between -13 °F and +158 °F (-25 °C and +70 °C), and stored in environments with temperatures between -40 °F and +158 °F (-40 °C and +70 °C).
The circuit breakers fitted with thermal magnetic trip units have their thermal element set for a reference temperature of 104 °F (+40 °C). For temperatures other than 104 °F (+40 °C), with the same setting, there is a devation table as shown beginning on page 4/50.
The electronic trip units do not undergo any variations in performance as the temperature varies except in cases of temperatures exceeding 104 °F (+40 °C). Then maximum setting for protection against overloads L must be reduced, as indicated in the derating graph beginning on page 4/37, to take into account the heating phenomena which occur in the current carrying copper parts of the circuit breaker.
For temperatures above 158 °F (+70 °C) the circuit breaker performances are not guaranteed. To ensure service continuity of the installations, the temperature must be kept within acceptable levels for operation of the various devices and the circuit breakers by using forced ventilation in the switchboards or in their installation room.

## Altitude

Up to an altitude of 6600 ft the Tmax circuit breakers do not undergo any changes in their rated performance. Above this altitude, the atmospheric properties are altered in terms of composition, dielectric resistance, cooling capacity and pressure, requiring the circuit breaker performance to be derated per the table below.

| Altitude | [ft] | 6600 | 9900 | 13200 | 16500 |
|---|---|---|---|---|---|
| Rated service voltage, Ue | [V~] | 600 | 522 | 435 | 348 |
| Rated uninterrupted current, Iu | %Iu | 100 | 98 | 93 | 90 |

## Electromagnetic compatibility

Protection operation is guaranteed by using the electronic trip units and the electronic residual current releases in the presence of interference caused by electronic devices, atmospheric disturbances or electrical discharges. No interference with other electronic devices near the place of installation is generated either. This is in compliance with the IEC 60947-2 Appendix B + Appendix F Standards and European Directive No. 89/336 regarding EMC - electromagnetic compatibility.

## Tropicalization

Circuit breakers and accessories in the Tmax series are tested in compliance with the IEC 60068-2-30 Standard, carrying out 2 cycles at 131 °F (55 °C) with the “variant 1” method (clause 6.3.3). The suitability of the Tmax series for use under the most severe environmental conditions is therefore ensured with the hot-humid climate defined in the climatograph 8 of the IEC 60721-2-1 Standards thanks to:
- moulded insulating cases made of synthetic resins reinforced with glass fibres;
- anti-corrosion treatment of the main metallic parts;
- Fe/Zn 12 zinc-plating (ISO 2081) protected by a conversion layer, free from hexavalent-chromium (ROHS-compliant), with the same corrosion resistance guaranteed by ISO 4520 class 2c;
- application of anti-condensation protection for electronic overcurrent releases and relative accessories.

# Tmax molded case circuit breakers
## Distinguishing features of the series

### Resistance to shock and vibration

The circuit breakers are unaffected by vibrations generated mechanically or due to electromagnetic effects, in compliance with the IEC 60068-2-6 Standards and the regulations of the major classification organizations[1]:
- RINA
- Det Norske Veritas
- Bureau Veritas
- Lloyd's register of shipping
- Germanischer Lloyd
- ABS
- Russian Maritime Register of Shipping.

The T1-T5 Tmax circuit breakers are also tested according to the IEC 60068-2-27 Standard to resist shock up to 12g for 11 ms. Please ask ABB for details about higher performance in terms of resistance to shock.

[1] Ask to ABB for Tmax certificates of approval.

### Versions and types

All the Tmax circuit breakers are available in fixed versions, T2, T3, Ts3, T4 and T5 in the plug-in version and Ts3, T4, T5, T6 and T7 also in the draw out one.
All the circuit breakers can be manually operated by the operating lever or the rotary handle (direct or variable depth), and electrically operated. For electric operation different solutions are available:
- The solenoid operator for T1, T2 and T3
- The direct action motor operator for Ts3
- The stored energy motor operator for T4, T5 and T6
- T7 with the stored energy operating mechanism, gear motor for the charging of the closing springs and shunt opening and closing releases.

### Installation

Tmax circuit breakers can be installed in switchboards mounted in any horizontal, vertical or lying down position on the back plate or on rails, without undergoing any derating. Tmax circuit breakers can be easily installed in all types of switchboards, thanks to the possibility of being reversefed.
Apart from fixing on the base plate, T1, T2 and T3 can also be installed on DIN 50022 rails and Ts3 can also be installed on DIN 50023 rails thanks to the special fixing brackets.
Furthermore, the depth of 2.76 inches (70 mm) takes Tmax T3 to the same depth as the two smaller sizes, making assembly of circuit breakers up to 225 A in standard switchboards even simpler. In fact, it is possible to prepare standardized support structures, facilitating the design stage and construction of the switchboard interior.

# Tmax molded case circuit breakers
## Distinguishing features of the series

### Racking-out with the door closed

With Tmax Ts3, T4, T5, T6 and T7 circuit breakers in the draw out version the circuit breaker can be racked-in and out with the compartment door closed, increasing operator safety and allowing realization of low voltage arc proof switchboards.
Racking out can only be carried out with the circuit breaker open (for safety reasons), using a special racking-out crank handle supplied with the conversion kit from fixed circuit breaker to moving part of draw out circuit breaker.

### Range of accessories

The completeness and installation rationality of the Tmax series is also achieved thanks to innovative solutions in development of the accessories:

- single range of accessories for T1, T2 and T3; one for T4, T5 and T6, and one for T7, characterised by completeness and simplicity for installation. The Ts3 due to its unique characteristics has its own group of accessories. Harmonization of the accessories allows reduction in stocks and greater service flexibility, offering increasing advantages for users of the Tmax series;
- new system of rapid assembly for internal electrical accessories of Tmax T7 without cables for the connections to the terminal box;
- same possibility of equipping with terminals, in terms of connection devices (terminals, terminal covers and phase separators), between fixed circuit breakers and cradles of plug-in circuit breakers for Tmax T2 and T3.
- moreover, Tmax offers a wide choice of IEC rated residual current releases (IEC only):
  - three-pole and four-pole RC221 and RC222 up to 225 A with T1, T2 and T3;
  - RC211 and RC212 for Ts3;
  - RC222, four-pole up to 500 A for T4 and T5;
  - RC223 (type B) also sensitive to currents with continuous slowly variable components (IEC 60947-2 Annex M), four-pole for T3 and T4, up to 250 A.

# Tmax molded case circuit breakers
## Distinguishing features of the series


### Compliance with Standards and company Quality System

The Tmax circuit breakers and their electrical accessories conform to the UL 489 (Underwriters Laboratories Incorporated) and CSA C22.2 No. 5.1 (Canadian Standard Association) North American Standards, and to the international IEC 60947-2 Standards and comply with the EC directive:

– "Low Voltage Directives" (LVD) no. 2006/95/CE (replaces 72/23/EEC and subsequent amendments)
– "Electromagnetic Compatibility Directive" (EMC) no. 89/336 EEC.

Certification of compliance with the above-mentioned product Standards is carried out, in respect of the European EN 45011 Standard, by the Italian certification body ACAE (Association for Certification of Electrical Apparatus), a member of the European LOVAG organization (Low Voltage Agreement Group). The ABB test laboratory is accredited by SINAL (certificate no. 062/2002).

The ABB Quality System complies with the international ISO 9001 - 2000 Standard (model for quality assurance in design, development, construction, installation and service) and with the equivalent European EN ISO 9001 and Italian UNI EN ISO 9001 Standards.

The independent certifying Body is RINA S.p.A. ABB obtained its first certification with three-year validity in 1990, and has now reached its fourth reconfirmation.

The new Tmax series has a hologram on the front, obtained using special anti-imitation techniques, which guarantees the quality and that the circuit breaker is an original ABB product.

Attention to protection of the environment and to health and safety in the work place is another priority commitment for ABB and, as confirmation of this, the company environmental management system has been certified by RINA in 1997, in conformity with the international ISO 14001 Standard. This certification has been integrated in 1999 with the Management System for Healt and Safety in the workplace, according to OHSAS 18001 (British Standards), obtaining one of the first certification of integrated management System, QES (Quality, Environment, Safety) issued by RINA. ABB – the first industry in the electromechanical section in Italy to obtain this recognition – thanks to a revision of the production process with an eye to ecology, has been able to reduce the consumption of raw materials and processing waste by 20%.

ABB's commitment to safeguarding the environment is also shown by the Life Cycle Assessments of its products carried out directly by ABB Research and Development in collaboration with the ABB Research Center. Selection of materials, processes and packing materials is made optimizing the true environmental impact of the product, also foreseeing the possibility of its being recycled.

# Table of contents
## Tmax main characteristics

# Tmax molded case circuit breakers
# Power distribution circuit breakers

## Electrical characteristics

| Breaker type | | T1 1p | T1 | T2 | | T3 | | Ts3 | | | Ts3 | | |
|---|---|---|---|---|---|---|---|---|---|---|---|---|---|
| Frame size | [A] | 100 | 100 | 100 | | 225 | | 150 | | | 225 | | |
| Number of poles | [No.] | 1 | 3-4 | 3-4 | | 3-4 | | 2-3-4 | | | 2-3-4 | | |
| Rated voltage | AC (50-60 Hz) [V] | 347 | 600Y/347 | 480 | | 600Y/347 | | 600 | | | 480 | | |
| | DC [V] | - | 500 | - | | 500 | | 600 | | | 500 | | |
| Interrupting ratings | Frame type | B | N | S | H | N | S | N | H | L | N | H | L |
| | 240 V AC [kA rms] | - | 50(2) | 65 | 150 | 50 | 65 | 65 | 100 | 150 | 65 | 100 | 150 |
| | 277 V AC [kA rms] | 18(1) | - | - | - | - | - | - | - | - | - | - | - |
| | 347 V AC [kA rms] | 14(1) | - | - | - | - | - | - | - | - | - | - | - |
| | 480 V AC [kA rms] | - | 22(2) | 35 | 65 | 25 | 35 | 25 | 50 | 85(3) | 25 | 50 | 65 |
| | 600Y/347 V AC [kA rms] | - | 10 | - | - | 10 | 10 | - | - | - | - | - | - |
| | 600 V AC [kA rms] | - | - | - | - | - | - | 14 | 14 | 25 | - | - | - |
| | 250 V DC (2 poles in series) [kA rms] | - | 25 | - | - | 25 | 35 | - | - | - | - | - | - |
| | 500 V DC (3 poles in series) [kA rms] | - | 25 | - | - | 25 | 35 | - | - | - | - | - | - |
| | 500 V DC (2 poles in series) [kA rms] | - | - | - | - | - | - | 35 | 50 | 65 | 20 | 35 | 50 |
| | 600 V DC (3 poles in series) [kA rms] | - | - | - | - | - | - | 20 | 35 | 50 | - | - | - |
| Version | | F | F | F-P | | F-P | | F-P-W | | | F-P-W | | |
| Trip units | TMF | • | • | • | | • | | • | | | • | | |
| | TMD/TMA | - | - | - | | - | | - | | | - | | |
| | MA | - | - | • | | • | | • | | | • | | |
| | Electronic PR221DS | - | - | • | | - | | - | | | - | | |
| | Electronic PR222DS/P | - | - | - | | - | | - | | | - | | |
| | Electronic PR222DS/PD-A | - | - | - | | - | | - | | | - | | |
| | Electronic PR231/P | - | - | - | | - | | - | | | - | | |
| | Electronic PR232/P | - | - | - | | - | | - | | | - | | |
| | Electronic PR331/P | - | - | - | | - | | - | | | - | | |
| | Electronic PR332/P | - | - | - | | - | | - | | | - | | |
| Dimensions | H [in/mm] | 5.12/130 | 5.12/130 | 5.12/130 | | 5.9/150 | | 6.7/170 | | | 6.7/170 | | |
| | W 3p [in/mm] | 1/25.4 | 3/76 | 3.54/90 | | 4.13/105 | | 4.13/105 | | | 4.13/105 | | |
| | D [in/mm] | 2.76/70 | 2.76/70 | 2.76/70 | | 2.76/70 | | 4.07/103.5 | | | 4.07/103.5 | | |
| Mechanical life | [No. operations] | 25000 | 25000 | 25000 | | 25000 | | 25000 | | | 25000 | | |

**(1) In 15A = 10 kA at 277V AC - 10 kA at 347V AC**
**(2) In 15A = 35 kA at 240V AC - 14 kA at 480Y/277V AC**
**(3) In 15A up to 30A = 65kA at 480V AC**

F - FIXED
P - PLUG-IN
W - WITHDRAWABLE

# Tmax molded case circuit breakers
# Power distribution circuit breakers

## Electrical characteristics

| Breaker type | | T4 | | | | | T5 | | | | | T6 | | | |
|---|---|---|---|---|---|---|---|---|---|---|---|---|---|---|---|
| Frame size | [A] | 250 | | | | | 400-600(1) | | | | | 800 | | | |
| Number of poles | [No.] | 2(2)-3-4 | | | | | 2(2)-3-4 | | | | | 3-4 | | | |
| Rated voltage | AC (50-60 Hz) [V] | 600 | | | | | 600 | | | | | 600 | | | |
| | DC [V] | 600 | | | | | 600 | | | | | 600 | | | |
| Interrupting ratings | Frame type | N | S | H | L | V | N | S | H | L | V | N | S | H | L |
| | 240 V AC [kA rms] | 65 | 100 | 150 | 200 | 200 | 65 | 100 | 150 | 200 | 200 | 65 | 100 | 200 | 200 |
| | 277 V AC [kA rms] | - | - | - | - | - | - | - | - | - | - | - | - | - | - |
| | 347 V AC [kA rms] | - | - | - | - | - | - | - | - | - | - | - | - | - | - |
| | 480 V AC [kA rms] | 25 | 35 | 65 | 100 | 150 | 25 | 35 | 65 | 100 | 150 | 35 | 50 | 65 | 100 |
| | 600Y/347 V AC [kA rms] | - | - | - | - | - | - | - | - | - | - | - | - | - | - |
| | 600 V AC [kA rms] | 18 | 25 | 35 | 65 | 100 | 18 | 25 | 35 | 65 | 100 | 20 | 25 | 35 | 42 |
| | 250 V DC (2 poles in series) [kA rms] | - | - | - | - | - | - | - | - | - | - | - | - | - | - |
| | 500 V DC (3 poles in series) [kA rms] | - | - | - | - | - | - | - | - | - | - | - | - | - | - |
| | 500 V DC (2 poles in series) [kA rms] | 25 | 35 | 50 | 65 | 100 | 25 | 35 | 50 | 65 | 100 | 35 | 35 | 50 | 65 |
| | 600 V DC (3 poles in series) [kA rms] | 16 | 25 | 35 | 50 | 65 | 16 | 25 | 35 | 50 | 65 | 20 | 20 | 35 | 50 |
| Version | | F-P-W | | | | | F-P-W | | | | | F-W | | | |
| Trip units | TMF | • | | | | | - | | | | | - | | | |
| | TMD/TMA | • | | | | | • | | | | | • | | | |
| | MA | - | | | | | - | | | | | - | | | |
| | Electronic PR221DS | - | | | | | - | | | | | - | | | |
| | Electronic PR222DS/P | • | | | | | • | | | | | • | | | |
| | Electronic PR222DS/PD-A | • | | | | | • | | | | | • | | | |
| | Electronic PR231/P | • | | | | | • | | | | | • | | | |
| | Electronic PR232/P | - | | | | | - | | | | | - | | | |
| | Electronic PR331/P | - | | | | | - | | | | | - | | | |
| | Electronic PR332/P | - | | | | | - | | | | | - | | | |
| Dimensions | H [in/mm] | 8.07/205 | | | | | 8.07/205 | | | | | 10.55/268 | | | |
| | W 3p [in/mm] | 4.13/105 | | | | | 5.51/140 | | | | | 8.26/210 | | | |
| | D [in/mm] | 4.07/103.5 | | | | | 4.07/103.5 | | | | | 4.07/103.5 | | | |
| Mechanical life | [No. operations] | 20000 | | | | | 20000 | | | | | 20000 | | | |

**(1) T5 600 with electronic trip units only and in 3 pole version**
**(2) 2P only available in the N interrupting rating**

## Electrical characteristics

| Breaker type | | T7 | | | T8 |
|---|---|---|---|---|---|
| Frame size | [A] | 1000-1200 | | | 1600-2000-2500-3000 |
| Number of poles | [No.] | 3-4 | | | 3-4 |
| Rated voltage | AC (50-60 Hz) [V] | 600 | | | 600 |
| | DC [V] | - | | | - |
| Interrupting ratings | Frame type | S | H | L | V |
| | 240 V AC [kA rms] | 65 | 100 | 150 | 125 |
| | 277 V AC [kA rms] | - | - | - | - |
| | 347 V AC [kA rms] | - | - | - | - |
| | 480 V AC [kA rms] | 50 | 65 | 100 | 125 |
| | 600Y/347 V AC [kA rms] | - | - | - | - |
| | 600 V AC [kA rms] | 25 | 50 | 65 | 125 |
| | 250 V DC (2 poles in series) [kA rms] | - | - | - | - |
| | 500 V DC (3 poles in series) [kA rms] | - | - | - | - |
| | 500 V DC (2 poles in series) [kA rms] | - | - | - | - |
| | 600 V DC (3 poles in series) [kA rms] | - | - | - | - |
| Version | | F-W | | | F |
| Trip units | TMF | - | | | - |
| | TMD/TMA | - | | | - |
| | MA | - | | | - |
| | Electronic PR221DS | - | | | - |
| | Electronic PR222DS/P | - | | | - |
| | Electronic PR222DS/PD-A | - | | | - |
| | Electronic PR231/P | • | | | - |
| | Electronic PR232/P | • | | | - |
| | Electronic PR331/P | • | | | • |
| | Electronic PR332/P | • | | | • |
| Dimensions | H [in/mm] | 10.55/268 | | | 15/382 |
| | W 3p [in/mm] | 8.26/210 | | | 16.8/427 |
| | D [in/mm] | 6.06/154 (toggle) - 7/178 (motorized) | | | 11.2/282 |
| Mechanical life | [No. operations] | 10000 | | | 15000 |

# Tmax molded case circuit breakers
# Power distribution circuit breakers

## General characteristics

The series of Tmax molded case circuit breakers – complying with the UL 489 and CSA C22.2 No. 5 Standards – is divided into different basic sizes, with an application range from 15 A to 3000 A and breaking capacities up to 150 kA at 480 VAC.
For protection of alternating current networks, the following are available:

- T1B 1p, T1, T2, T3, Ts3 and T4 circuit breakers equipped with TMF thermal magnetic trip units with fixed thermal and magnetic threshold ($I_3$ = 10 x In);
- T4 (up to 50 A) circuit breaker equipped with TMD thermal magnetic trip units with adjustable thermal threshold ($I_1$ = 0.7…1 x In) and fixed magnetic threshold ($I_3$ = 10 x In);
- T4, T5 and T6 circuit breakers with TMA thermal magnetic trip units with adjustable thermal threshold ($I_1$ = 0.7…1 x In) and adjustable magnetic threshold ($I_3$ = 5…10 x In);
- T2 with PR221DS electronic trip unit;
- T4, T5 and T6 with PR221DS, PR222DS/P and PR222DS/PD-A electronic trip units;
- The T7 circuit breaker, which completes the Tmax family up to 1200 A, fitted with PR231/P, PR232/P, PR331/P and PR332/P electronic trip units. The T7 circuit breaker is available in the two versions: with a manual operating mechanism or a motorized stored energy operating mechanism(*).
- The T8 circuit breaker, considered an insulated case up to 3000 A, fitted with PR232/P, PR331/P and PR332/P electronic trip units. The T8 circuit breaker is only available in the motorized stored energy operating mechanism(*)

The field of application in alternating current of the Tmax series varies from 1 A to 3000 A with voltages up to 600 V. The Tmax T1, T2, T3, Ts3, T4, T5 and T6 circuit breakers equipped with TMF, TMD and TMA thermal magnetic trip units can also be used in direct current plants, with a range of applications from 15 A to 800 A and a minimum operating voltage of 24 V DC, according to the appropriate connection diagrams.
The three-pole T2, T3 and Ts3 circuit breakers can also be fitted with MA adjustable magnetic only trip units, both for applications in alternating current and in direct current, in particular for motor protection.
For all the circuit breakers in the series, fitted with thermal magnetic and electronic trip units, the single-phase trip current is defined.

(*) **For motorization, the T7 and T8 circuit breaker with stored energy operating mechanism must be ordered, complete with geared motor for automatic spring charging, opening coil and closing coil.**

## Interchangeability

The Tmax T4, T5 and T6 circuit breakers can be equipped either with TMF, TMD or TMA thermal magnetic trip units, MA magnetic only trip units or PR221DS, PR222DS/P, PR222DS/PD-A electronic trip units.
Similarly, Tmax T7 and T8 can also mount the latest generation PR231/P(3), PR232/P, PR331/P(1) and PR332/P(1) electronic trip units.
Thanks to their simply assembly, the end customer can change the type of trip unit extremely rapidly according to their own requirements and needs. In this case, correct assembly is the customer's responsibility. Above all, this means into increased flexibility of use of the circuit breakers with considerable savings in terms of costs thanks to better rationalization of stock management.

| Circuit breakers | TMF | TMD | TMA | | | PR221DS-PR222DS/P-PR222DS/PD-A(2) | | | | PR231/P(3)-PR232/P(3)-PR331/P-PR332/P | | | | | | |
|---|---|---|---|---|---|---|---|---|---|---|---|---|---|---|---|---|
| In [A] | 15-20 | 30-50 | 80-250 | 300-400 | 600-800 | 100-250 | 300-400 | 600 | 800 | 400-800 | 1000 | 1200 | 1600 | 2000 | 2500 | 3000 |
| T4 250 | • | • | • | | | • | | | | | | | | | | |
| T5 400 | | | | • | | | • | | | | | | | | | |
| T5 600 | | | | | | | | • | | | | | | | | |
| T6 800 | | | | | • | | | • | • | | | | | | | |
| T7 1000 | | | | | | | | | | • • | • | | | | | |
| T7 1200 | | | | | | | | | | • • | • • | • | | | | |
| T8 1600 | | | | | | | | | | | | | • | | | |
| T8 2000 | | | | | | | | | | | | | • • | • | | |
| T8 2500 | | | | | | | | | | | | | • • | • • | • | |
| T8 3000 | | | | | | | | | | | | | • • | • • | • • | • |

• = Complete circuit breaker already coded
• • = Circuit breaker to be assembled

(1) If ordered loose PR331/P and PR332/P must be completed with the "trip unit adapters"

(2) PR223DS, minimum In = 160 A

(3) Trip unit for T7 only

# Tmax molded case circuit breakers
# Power distribution circuit breakers

## Range of application of the circuit breakers in alternating current and in direct current

| AC | Trip unit | Range [A] |
|---|---|---|
| T1 1p 100 | TMF | 15…100 |
| T1 100 | TMF | 15…100 |
| T2 100 | TMF | 15…100 |
| | MA | 20…100 |
| | PR221DS | 25…100 |
| T3 225 | TMF | 60…225 |
| | MA | 100…200 |
| Ts3 150 | TMF | 15…150 |
| | MA | 3…150 |
| Ts3 225 | TMF | 175…225 |
| | MA | 175…200 |
| T4 250 | TMF | 15…250 |
| | TMD | 20 |
| | TMA | 30…50 |
| | PR221DS | 80…250 |
| | PR222DS/P-PR222DS/PD-A | 100…250 |
| T5 400/600 | TMA | 300…400 |
| | PR221DS | 300-400-600 |
| | PR222DS/P-PR222DS/PD-A | 300-400-600 |
| T6 800 | TMA | 600…800 |
| | PR221DS | 600…800 |
| | PR222DS/P-PR222DS/PD-A | 600…800 |
| T7 1000/1200 | PR231/P-PR232/P | 400…1200 |
| | PR331/P-PR332/P | 400…1200 |
| T8 | PR331/P | 1000...3000 |
| | PR332/P | 1000...3000 |

| DC | Trip unit | Range [A] |
|---|---|---|
| T1 100 | TMF | 15…100 |
| T2 | MA | 20…100 |
| T3 225 | TMF | 60…225 |
| Ts3 150 | TMF | 15…150 |
| | MA | 3…150 |
| Ts3 225 | TMF | 175…225 |
| | MA | 175…200 |
| T4 250 | TMD | 15…250 |
| | TMA | 15…250 |
| | TMF | 15…250 |
| T5 400/600 | TMA | 300-400 |
| T6 800 | TMA | 600…800 |

MA = magnetic only trip unit with adjustable magnetic thresholds
TMF = thermal magnetic trip unit with fixe thermal and magnetic thresholds
TMD = thermal magnetic trip unit with adjustable thermal and fixed magnetic thresholds
TMA = thermal magnetic trip unit with adjustable thermal and magnetic thresholds
PR22_, PR23_, PR33_ = electronic trip units

# Tmax molded case circuit breakers
# Power distribution circuit breakers

## Thermal magnetic trip units

The Tmax T1_1p, T1, T2, T3, Ts3, T4, T5 and T6 circuit breakers can be fitted with thermal magnetic trip units and are used in protection of alternating and direct current networks with a range of use from 15 A to 800 A. They allow the protection against overload with a thermal device (with fixed threshold for T1 1p, T1, T2, T3, Ts3, T4 and adjustable threshold for T4, T5 and T6) realized using the bimetal technique, and protection against short-circuit with a magnetic device (with fixed threshold for T1, T2, T3, Ts3 and T4 up to 50 A and adjustable threshold for T4, T5 and T6).
The four-pole circuit breakers are always supplied with the neutral protected by the trip unit and with protection of the neutral at 100% of the phase settings up to 100 A. For higher settings, the protection of the neutral is at 50% of the phase setting unless the protection of the neutral at 100% of the phase setting is required.

| In [A] | 15 | 20 | 25 | 30 | 35 | 40 | 50 | 60 | 70 | 80 | 90 | 100 | 125 | 150 | 175 | 200 | 225 | 250 | 300 | 400 | 600 | 800 |
|---|---|---|---|---|---|---|---|---|---|---|---|---|---|---|---|---|---|---|---|---|---|---|
| Neutral [A] | 15 | 20 | 25 | 30 | 35 | 40 | 50 | 60 | 70 | 80 | 90 | 100 | 125 | 150 | 175 | 200 | 225 | 250 | 300 | 400 | 600 | 800 |
| T1 ($I_1$=In) | • | • | • | • | | • | • | • | • | • | • | • | | | | | | | | | | |
| T2 ($I_1$=In) | • | • | • | • | • | • | • | • | • | • | • | • | | | | | | | | | | |
| T3 ($I_1$=In) | | | | | | | | • | • | • | • | • | • | • | • | • | • | | | | | |
| Ts3 ($I_1$=In) | • | • | • | • | • | • | • | • | • | • | • | • | • | • | • | • | • | | | | | |
| T4 ($I_1$=In) | • | • | | | | | | | | | | | | | | | | | | | | |
| T4 ($I_1$=0.7...1xIn) | | | | • | | • | • | | | • | | • | • | • | | • | | • | | | | |
| T5 400 ($I_1$=0.7...1xIn) | | | | | | | | | | | | | | | | | | | • | • | | |
| T6 ($I_1$=0.7...1xIn) | | | | | | | | | | | | | | | | | | | | | • | • |
| T1 | | | | | | | | | | | | | | | | | | | | | | |
| $I_3$ [A] | 1000 | 1000 | 1000 | 1000 | | 1000 | 1500 | 1500 | 1500 | 1500 | 1500 | 1500 | | | | | | | | | | |
| Neutral [A] | 1000 | 1000 | 1000 | 1000 | | 1000 | 1500 | 1500 | 1500 | 1500 | 1500 | 1500 | | | | | | | | | | |
| T2, T3 | | | | | | | | | | | | | | | | | | | | | | |
| $I_3$ [A] | 500 | 500 | 500 | 500 | 500 | 500 | 500 | 600 | 700 | 800 | 900 | 1000 | 1250 | 1500 | 1750 | 2000 | 2250 | | | | | |
| Neutral [A] | 500 | 500 | 500 | 500 | 500 | 500 | 500 | 600 | 700 | 800 | 900 | 1000 | 1250 | 1500 | 1750 | 2000 | 2250 | | | | | |
| Ts3 | | | | | | | | | | | | | | | | | | | | | | |
| $I_3$ [A] | 500 | 500 | 500 | 500 | 500 | 500 | 500 | 600 | 700 | 800 | 900 | 1000 | 1250 | 1500 | 1750 | 2000 | 2250 | | | | | |
| Neutral [A] | 500 | 500 | 500 | 500 | 500 | 500 | 500 | 600 | 700 | 800 | 900 | 1000 | 1250 | 1500 | 1750 | 2000 | 2250 | | | | | |
| T4, T5 | | | | | | | | | | | | | | | | | | | | | | |
| $I_3$ [A] | 500 | 500 | | 500 | | 500 | 500 | | | 400<br>800 | | 500<br>1000 | 625<br>1250 | 750<br>1500 | | 1000<br>2000 | | 1250<br>2500 | 1500<br>3000 | 2000<br>4000 | 3000<br>6000 | 4000<br>8000 |
| Neutral [A] | 500 | 500 | | 500 | | 500 | 500 | | | 400<br>800 | | 500<br>1000 | 625<br>1250 | 750<br>1500 | | 1000<br>2000 | | 1250<br>2500 | 1500<br>3000 | 2000<br>4000 | 3000<br>6000 | 4000<br>8000 |
| T6 | | | | | | | | | | | | | | | | | | | | | | |
| $I_3$ = 5...10xIn [A] | | | | | | | | | | | | | | | | | | | | | 3000<br>6000 | 4000<br>8000 |
| Neutral [A] - 100% | | | | | | | | | | | | | | | | | | | | | 3000<br>6000 | 4000<br>8000 |
| Neutral [A] - 50% | | | | | | | | | | | | | | | | | | | | | 1500<br>3000 | 2000<br>4000 |

# Tmax molded case circuit breakers
# Power distribution circuit breakers

## Thermomagnetic trip units TMD / TMA (for T4, T5 and T6)

Thermal threshold
Adjustable from 0.7 to 1 x In

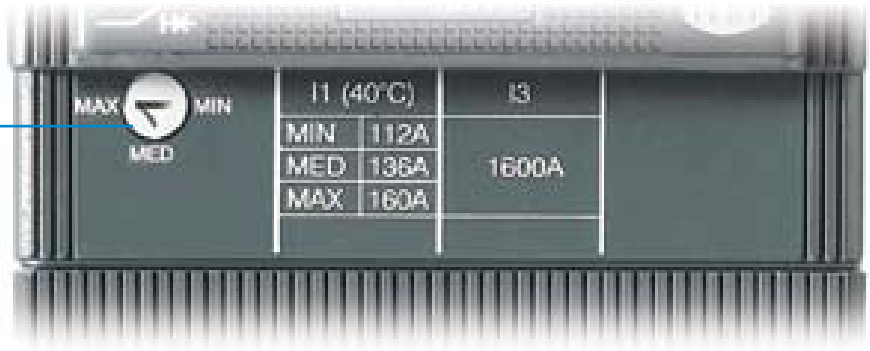


Thermal threshold
Adjustable from 0.7 to 1 x In

Magnetic threshold
Adjustable from 5 to 10 x In

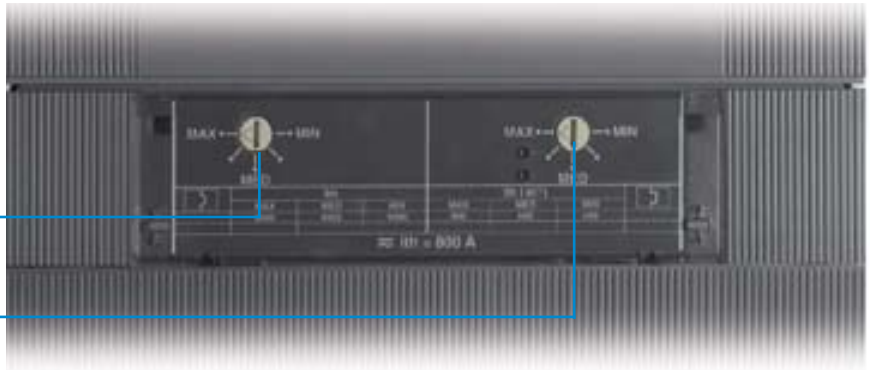

### TMD/TMA - T4

| | | | | | | | | | | | |
|---|---|---|---|---|---|---|---|---|---|---|---|
| L | In [A] | 20 | 30 | 40 | 50 | 80 | 100 | 125 | 150 | 200 | 250 |
| | Min. adj. | – | 21 | 28 | 35 | 56 | 70 | 88 | 105 | 140 | 175 |
| $I_1$=0.7…1 x In | Max. adj. | – | 30 | 40 | 50 | 80 | 100 | 125 | 150 | 200 | 250 |
| I | $I_3$ = 10 x In [A] | 500 | 500 | 500 | 500 | – | – | – | – | – | – |
| | $I_3$ = 5...10 x In [A] | – | – | – | – | 800 | 1000 | 1250 | 1500 | 2000 | 2500 |
| $I_3$ = 10 x In | Min. adj. | – | – | – | – | 400 | 500 | 625 | 750 | 1000 | 1250 |
| $I_3$ = 5...10 x In | Max. adj. | – | – | – | – | 800 | 1000 | 1250 | 1500 | 2000 | 2500 |

### TMA - T5

| | | | |
|---|---|---|---|
| L | In [A] | 300 | 400 |
| | Min. adj. | 210 | 280 |
| $I_1$=0.7…1 x In | Max. adj. | 300 | 400 |
| I | $I_3$ [A] | 3000 | 4000 |
| | Min. adj. | 1500 | 2000 |
| $I_3$ = 5...10 x In | Max. adj. | 3000 | 4000 |

### TMA - T6

| | | | |
|---|---|---|---|
| L | In [A] | 600 | 800 |
| | Min. adj. | 420 | 560 |
| $I_1$=0.7…1 x In | Max. adj. | 600 | 800 |
| I | $I_3$ [A] | 6000 | 8000 |
| | Min. adj. | 3000 | 4000 |
| $I_3$ = 5...10 x In | Max. adj. | 6000 | 8000 |

# Tmax molded case circuit breakers
# Power distribution circuit breakers

## Electronic trip units

For use in alternating current the Tmax T2, T4, T5, T6 and T7 circuit breakers can be equipped with trip units constructed using electronic technology. This allows protection functions to be obtained which provide high reliability, tripping precision and insensitivity to temperature and to the electromagnetic components.
The power supply needed for correct operation is supplied directly by the current sensors of the trip unit, and tripping is always guaranteed, even under single-phase load conditions.

## Characteristics of the Tmax electronic trip units

| | |
|---|---|
| Operating temperature | -13 °F…+158 °F (-25 °C…+70 °C) |
| Relative humidity | 98% |
| Self-supply | 0.2 x In (single phase) |
| Auxiliary power supply (where applicable) | 24 V DC |
| Operating frequency | 45…66 Hz |
| Electromagnetic compatibility (LF and HF) | IEC 60947-2 Annex F |

For Tmax T2, T4, T5 and T6 the protection trip unit consists of:
- 3 or 4 current sensors (current transformers)
- external current sensors (e.g. for the external neutral), when available
- a trip unit
- a trip coil (for T2 housed in the right slot, for T4, T5 and T6 integrated in the electronic trip unit).

For Tmax T7 and T8 the protection trip unit consists of:
- 3 or 4 current sensors (Rogowski coils and current transformers)
- external current sensors (e.g. for the external neutral)
- interchangeable rating plug
- a trip unit
- a trip coil housed in the body of the circuit breaker.

## Rating plugs

| Circuit breaker | CS Rated current $I_u$ | In [A] | | | | | | | | |
|---|---|---|---|---|---|---|---|---|---|---|
| | | 400 | 600 | 800 | 1000 | 1200 | 1600 | 2000 | 2500 | 3000 |
| T7 | 1000 | • | • | • | • | - | - | - | - | - |
| | 1200 | • | • | • | • | • | - | - | - | - |
| T8 | 1600 | - | - | - | • | • | • | | - | - |
| | 2000 | - | - | - | • | • | • | • | - | - |
| | 2500 | - | - | - | • | • | • | • | • | |
| | 3000 | - | - | - | • | • | • | • | • | • |

The current sensors supply the electronic trip unit with the energy needed for correct operation of the trip unit and the signal needed to detect the current.
The current sensors are available with rated primary current as shown in the table.

# Tmax molded case circuit breakers
# Power distribution circuit breakers

## Current sensors

| In [A] | | 25 | 60 | 100 | 150 | 250 | 300 | 400 | 600 | 800 | 1000 | 1200 | 1600 | 2000 | 2500 | 3000 |
|---|---|---|---|---|---|---|---|---|---|---|---|---|---|---|---|---|
| PR221DS | T2 | • | • | • | • | - | - | - | - | - | - | - | - | - | - | - |
| | T4 | - | - | • | • | • | • | - | - | - | - | - | - | - | - | - |
| | T5 | - | - | - | - | - | • | • | • | - | - | - | - | - | - | - |
| | T6 | - | - | - | - | - | - | - | • | • | - | - | - | - | - | - |
| PR222DS/P, PR222DS/PD-A | T4 | - | - | • | • | • | • | - | - | - | - | - | - | - | - | - |
| | T5 | - | - | - | - | - | • | • | • | - | - | - | - | - | - | - |
| | T6 | - | - | - | - | - | - | - | • | • | - | - | - | - | - | - |
| PR231/P, PR232/P, PR331/P, PR332/P | T7 | - | - | - | - | - | - | • | • | • | • | • | - | - | - | - |
| PR331/P, PR332/P | T8 | - | - | - | - | - | - | - | - | - | • | • | • | • | • | • |

When a protection function trips, the circuit breaker opens by means of the trip coil, which changes the contact AUX-SA (supplied on request, see chapter “Accessories” ) to tripping. Mechanical signalling reset takes place with resetting of the circuit breaker.

## Basic protection functions

| | |
|---|---|
| L | (L) Protection against overload<br>This protection function trips when there is an overload with inverse long-time delay trip according to an inverse time curve ($I^2t$=k). The protection cannot be excluded. |
| S | (S) Protection against short-circuit with time delay<br>This protection function trips when there is a short-circuit, with long inverse time-delay trip ($I^2t$=k ON) or a constant trip time ($I^2t$=k OFF). The protection can be excluded. |
| I | (I) Instantaneous protection against short-circuit<br>This protection function trips instantaneously in case of a short-circuit. The protection can be excluded. |
| G | (G) Protection against ground fault<br>The protection against ground fault trips when the vectorial sum of the currents passing through the current sensors exceeds the set threshold value, with long inverse time-delay trip ($I^2t$=k ON) or a constant trip time ($I^2t$=k OFF). The protection can be excluded. |

# Tmax molded case circuit breakers
# Power distribution circuit breakers

The PR332/P trip unit makes it possible to carry out highly developed protection against the most varied types of fault. It adds the following advanced protection functions to the basic protection functions.

## Advanced protection functions

| | |
|---|---|
| U | (U) Protection against unbalanced phase<br>The protection function against unbalanced phase U can be used in those cases where a particularly precise control is needed regarding missing and/or unbalance of the phase currents. The trip time is instantaneous. The protection can be excluded. |
| OT | (OT) Protection against overtemperature<br>The protection against overtemperature trips instantaneously when the temperature inside the trip unit exceeds 85 °C, in order to prevent any temporary or continual malfunction of the microprocessor. The protection cannot be excluded. |
| ZS | (ZS) Zone selectivity<br>ZS zone selectivity is an advanced method for carrying out coordination of the protections in order to reduce the trip times of the protection closest to the fault in relation to the time foreseen by time selectivity. Zone selectivity can be applied to the protection functions S and G, with constant time-delay trip. The protection can be excluded. |
| UV OV RV | (UV, OV, RV) Protections against voltage<br>The three protections trip with a constant time-delay in the case of undervoltage, overvoltage and residual voltage respectively. The latter allows to detect interruptions of the neutral (or of the ground conductor in systems with grounded neutral). The protections can be excluded. |
| RP | (RP) Protection against reversal of power<br>The protection against reversal power causes tripping of the breaker, with constant time-delay trip, when the flow of power reverses sign and exceeds, as an absolute value, the set threshold. It is particularly suitable for protection of large machines such as generators. The protection can be excluded. |
| UF OF | (UF, OF) Protections of frequency<br>The two protections detect the variation in network frequency above or below the adjustable thresholds, opening the circuit breaker, with constant time-delay trip. The protection can be excluded. |

**SACE PR221DS**

| | PR221DS | PR221DS |
|---|---|---|
| Protection functions | L S / I | I |

**SACE PR222DS/P**

| | PR222DS/P | PR222DS/P |
|---|---|---|
| Protection functions | L S I | L S I G |

**SACE PR222DS/PD-A**

| | PR222DS/PD-A | PR222DS/PD-A |
|---|---|---|
| Protection functions | L S I | L S I G |

# Tmax molded case circuit breakers
## Power distribution circuit breakers

### SACE PR231/P

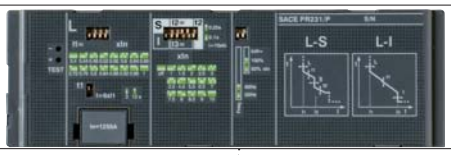


| | | |
|---|---|---|
| Protection functions | PR231/P | PR231/P |
| | L S / I | I |

### SACE PR232/P

| | |
|---|---|
| Protection functions | PR232/P |
| | L S I |

### SACE PR331/P

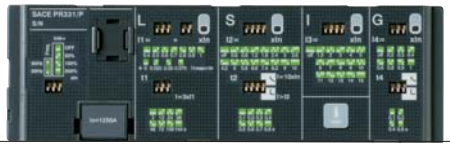

| | |
|---|---|
| Protection functions | PR331/P |
| | L S I G |

### SACE PR332/P

| | | | |
|---|---|---|---|
| Protection functions | PR232/P | PR232/P | PR232/P |
| | L I | L S I | L S I G |
| Advanced protection functions(*) | U OT | U OT | U OT |
| Options (**) | UV OV RV RP UF OF | UV OV RV RP UF OF | UV OV RV RP UF OF |

# Tmax molded case circuit breakers
# Power distribution circuit breakers

## PR221DS – Tmax T2, T4, T5 and T6

The PR221DS trip unit, available for T2,T4, T5 and T6, provides protection functions against overload L and short-circuit S/I (version PR221DS-LS/I): with this version you can choose whether to have inverse time-delay S or instantaneous I protection against short-circuit by moving the dedicated dip-switch. Alternatively, the version with only the protection function against instantaneous short-circuit I is available.
There is a single adjustment for the phases and the neutral. The neutral is adjustable from 50 - 100% of the phases for Tmax T2 In = 160 A (T2 In<160 A, N = 100%), whereas for T4, T5 and T6 it is possible to select the protection threshold OFF, 50% or 100% directly from the front of the trip unit by means of the specific dip switch.
The trip coil is always supplied with the PR221DS trip unit for Tmax T2 and is housed in the right-hand slot of the circuit breaker. Dedicated auxiliary contacts are available for T2 with electronic trip units
For Tmax T4, T5 and T6, the opening solenoid is housed internally and therefore, by not using the right-hand slot of the circuit breaker, all the auxiliary contacts available can be used.

## PR221DS-LS/I

Protection S
Against short-circuit
with delayed trip

Protection L
Against overload


Dip-switch for
neutral setting
(only for T4, T5 and T6)

Socket for TT1
test unit

Protection I
Against short-circuit
with instantaneous trip

## PR221DS - Protection functions and settings

| Protection functions | | | Trip threshold | Trip curves[1] |
|---|---|---|---|---|
| L<br>CANNOT BE EXCLUDED | Against overload with long inverse time delay trip and trip characteristic according to an inverse time curve ($I^2t$=constant) | | $I_1$ = 0.40 - 0.44 - 0.48 - 0.52 - 0.56 - 0.60 - 0.64 - 0.68 - 0.72 - 0.76 - 0.80 - 0.84 - 0.88 - 0.92 - 0.96 - 1 x In<br>Release between 1.1...1.3 x $I_1$<br>(IEC 60947-2 and UL 489) | at 6 x $I_1$, $t_1$ = 3s<br>at 6 x $I_1$, $t_1$ = 6s only for T2<br>at 6 x $I_1$, $t_1$ = 12s only for T4, T5<br>Tolerance: ± 10% up to 6 x In<br>± 20% above 6 x In |
| S<br>CAN BE EXCLUDED | Against short-circuit with inverse short time delay trip and trip characteristic with inverse time ($I^2t$=constant) (selectable as an alternative to protection function I) | | $I_2$ = 1 - 1.5 - 2 - 2.5 - 3 - 3.5 - 4.5 - 5.5 - 6.5 - 7 - 7.5 - 8 - 8.5 - 9 - 10 x In[2]<br>Tolerance: ± 10% (T4-T5)<br>± 10% up to 2 x In (T2)<br>± 20% above 2 x In (T2) | a 8 x In, $t_2$ = 0,1s<br>a 8 x In, $t_2$ = 0,25s<br>Tolerance: ± 10% up to 6 x In (T4-T5)<br>± 20% above 6 x In (T4-T5)<br>± 20% (T2) |
| I<br>CAN BE EXCLUDED | Against short-circuit with instantaneous trip (selectable as an alternative to protection function S) | | $I_3$ = 1 - 1,5 - 2 - 2,5 - 3 - 3,5 - 4,5 - 5,5 - 6,5 - 7 - 7,5 - 8 - 8,5 - 9 - 10 x In[3]<br>Tolerance: ± 10% (T4-T5)<br>± 20% (T2) | instantaneous |

(1) These tolerances hold in the following conditions:
– self-powered relay at full power and/or auxiliary supply;
– two or three-phase power supply.

In conditions other than those considered, the following tollerances hold:

| | Trip time |
|---|---|
| S | ± 20% |
| I | ≤ 40ms |

(2) For T5 In = 600 A - $I_2$ max = 9.5 x In
(3) For T5 In = 600 A - $I_3$ max = 9.5 x In

# Tmax molded case circuit breakers
# Power distribution circuit breakers

## PR222DS/P – Tmax T4, T5 and T6

The PR222DS/P trip unit, available for T4, T5 and T6, has protection functions against overload L, delayed S and instantaneous I short-circuit (version PR222DS/P-LSI). Alternatively, in addition to the functions L, S, I, it also has protection against ground fault G (version PR222DS/P-LSIG).
Setting of the PR222DS trip unit can be carried out either by means of dip switches on the front of the circuit breaker or electronically, using the PR010/T programming and control unit or the BT030 wireless communication unit.
There is a single setting for the phases and neutral for which one can decide whether to set the threshold of the protection functions to OFF, to 50% or to 100% of the phases by means of two dedicated dip switches.
Furthermore, on the front of the PR222DS/P (or PR222DS/PD-A) trip units, signalling of pre-alarm and alarm of protection L is available. The pre-alarm threshold value, signalled by the red LED fixed, is equal to 0.9 x I1. It is also possible to remotely transmit the alarm of protection L by simply connecting connector X3 to the dedicated contact.

## PR222DS/PD-A – Tmax T4, T5 and T6

Apart from the protection functions available for the PR222DS/P trip unit (for the settings see page 2/18), the PR222DS/PD-A trip unit, available for T4, T5 and T6 also has the communication unit integrated with Modbus® RTU protocol.
The Modbus® RTU protocol has been known and used worldwide for many years and is now a market standard thanks to its simplicity of installation, configuration and to its integration in the various different supervision, control and automation systems, as well as good level performances.
The PR222DS/PD-A trip units allow the Tmax T4, T5 and T6 circuit breakers to be integrated in a communication network based on the Modbus® RTU protocol. Modbus® RTU provides a Master-Slave system architecture where a Master (PLC, PC…) cyclically interrogates several Slaves (field devices). The devices use the EIA RS485 standard as the physical means for data transmission at a maximum transmission speed of 19.2 kbps.
Again for this trip unit, the power supply needed for correct operation of the protection functions is supplied directly by the current transformers of the trip unit and tripping is always guaranteed, even under conditions of single-phase load down. Nevertheless, communication is only possible with an auxiliary power supply of 24 V DC.

## PR222DS/PD-A – Electrical characteristics

| | |
|---|---|
| Auxiliary power supply (galvanically insulated) | 24 V DC ± 20% |
| Maximum ripple | ± 5% |
| Inrush current @ 24 V | 1 A for 30 ms |
| Rated current @ 24 V | 100 mA |
| Rated power @ 24 V | 2.5 W |

The PR222DS/PD-A trip unit, with integrated communication and control functions, allows a wide range of information to be acquired and transmitted remotely, opening and closing commands to be carried out by means of the electronic version motor operator, the configuration and programming parameters of the unit to be stored, such as the current thresholds of the protection functions and the protection curves.
All the information can be consulted both locally, directly on the front of the circuit breaker with the front display unit FDU, or on the HMI030 switchgear multi-meter and remotely by means of supervision and control systems.
Moreover, by connecting of the BT030 external module to the test connector of the PR222DS/PD-A trip unit, wireless communication to a PDA or Notebook is possible through a Bluetooth port.
The PR222DS/PD-A trip units can be associated with the AUX-E auxiliary contacts to know the state of the circuit breaker (open/closed), and with MOE-E motor operator (the AUX-E are obligatory when MOE-E is to be used) to remotely control circuit- breaker opening and closing as well.
If the circuit breaker fitted with the PR222DS/PD-A trip unit is inserted in a supervision system, during the test phases with the PR010/T unit, communication is automatically abandoned and starts again on completion of this operation.

# Tmax molded case circuit breakers
## Power distribution circuit breakers

| Communication functions | PR222DS/P | PR222DS/PD-A |
|---|---|---|
| Protocol | | Modbus RTU standard |
| Physical medium | | EIA RS485 |
| Speed (maximum) | | 19.2 kbps |
| **Measurement functions** | | |
| Phase currents | • (1) | • |
| Neutral current | • (1) | • |
| Ground current | • (1) | • |
| Voltages (phase to phase, phase to ground) | | |
| Powers (active, reactive, apparent) | | |
| Power factors | | |
| Energies | | |
| Peak factor | | |
| Frequency | | |
| **Signalling functions** | | |
| L pre-alarm and alarm LED | • (5) | • (5) |
| L alarm output contact(2) | • | • |
| **Available data** | | |
| Circuit breaker status (open, closed)(3) | | • |
| Mode (local, remote) | | • |
| Protection parameters set | • (1) | • |
| **Alarms** | | |
| Protections: L, S, I, G | • (1) | • |
| Failed tripping under fault conditions | • (1) | • |
| **Maintenance** | | |
| Total number of operations | | • |
| Total number of trips | | • |
| Number of trip tests | | • |
| Number of manual operations | | • |
| Number of trips for each individual protection function | | • |
| Record of last trip data | • (1) | • |
| **Commands** | | |
| Circuit breaker opening/closing (with motor operator) | | • |
| Alarm reset | • (1) | • |
| Circuit breaker reset (with motor operator) | | • |
| Setting the curves and protection thresholds | • (1) | • |
| **Safety function** | | |
| Automatic opening in the case of failed Trip command fail (with motor operator)(4) | | • |
| **Events** | | |
| Changes in circuit breaker state, in the protections and all the alarms | | • |

(1) With PR010/T unit or BT030 unit
(2) Typical contact: MOS photo Vmax: 48 V DC/30 V AC
Imax: 50 mA DC/35 mA AC
(3) Available with AUX-E electronic auxiliary contacts
(4) The motor operator must be in electronic version (MOE-E) and electronic auxiliary contacts (AUX-E) have to be used
(5) Signals: – Pre-alarm L - permanently lit
– Alarm L - flashing (0.5 s ON / 0.5 s OFF)
– Incongruent manual setting (L > S / S > I) - flashing (1 s ON / 2 s OFF)
– WINK (remote control to identify the relay) - flashing (0.125 s ON / 0.125 s OFF)

# Tmax molded case circuit breakers
## Power distribution circuit breakers

### PR222DS/P


### PR222DS/PD-A

# Tmax molded case circuit breakers
# Power distribution circuit breakers

## PR222DS/P, PR222DS/PD-A – Protection functions and settings

| Protection functions | | | Trip threshold | Trip curves[1] |
|---|---|---|---|---|
| L<br>CANNOT BE EXCLUDED | Against overload with long inverse time delay trip and trip characteristic according to an inverse time curve ($I^2t$=constant) | | Manual setting<br>$I_1$ = 0.40 - 0.42 - 0.44 - 0.46 - 0.48 - 0.50 - 0.52 - 0.54 - 0.56 - 0.58 - 0.60 - 0.62 - 0.64 - 0.66 - 0.68 - 0.70 - 0.72 - 0.74 - 0.76 - 0.78 - 0.80 - 0.82 - 0.84 - 0.86 - 0.88 - 0.90 - 0.92 - 0.94 - 0.96 - 0.98 - 1 x In | Manual setting<br>at 6 x $I_1$ $t_1$ = 3s; at 6 x $I_1$ $t_1$ = 6s; at 6 x $I_1$ $t_1$ = 9s; at 6 x $I_1$ $t_1$ = 18s[2] |
| | | | Electronic setting<br>$I_1$= 0.40…1 x In (step 0.01 x In)<br>Release between 1.1...1.3 x $I_1$<br>(IEC 60947-2 and UL 489) | Electronic setting<br>at 6 x $I_1$ $t_1$ = 3…18s (step 0.5s)[2]<br>Tolerance: ± 10% |
| S<br>CAN BE EXCLUDED | Against short-circuit with inverse short time delay trip and trip characteristic with inverse time ($I^2t$=constant) or definite time | $I^2t$=const ON | Manual setting<br>$I_2$ = 0.6 - 1.2 - 1.8 - 2.4 - 3.0 - 3.6 - 4.2 - 5.8 - 6.4 - 7.0 - 7.6 - 8.2 - 8.8 - 9.4 - 10 x In[3] | Manual setting<br>at 8 x In $t_2$ = 0.05s; at 8 x In $t_2$ = 0.1s; at 8 x In $t_2$ = 0.25s; at 8 x In $t_2$=0.5s |
| | | | Electronic setting<br>$I_2$ = 0.60…10 x In (step 0.1 x In) [3]<br>Tolerance: ± 10% | Electronic setting<br>at 8 x In $t_2$ = 0.05…0.5s (step 0.01s)<br>Tolerance: ± 10%[4] |
| | | $I^2t$=const OFF | Manual setting<br>$I_2$ = 0.6 - 1.2 - 1.8 - 2.4 - 3.0 - 3.6 - 4.2 - 5.8 - 6.4 - 7.0 - 7.6 - 8.2 - 8.8 - 9.4 - 10 x In[3] | Manual setting<br>$t_2$ = 0.05s; $t_2$ = 0.1s; $t_2$ = 0.25s; $t_2$=0.5s |
| | | | Electronic setting<br>$I_2$ = 0.60…10 x In (step 0.1 x In)[3]<br>Tolerance: ± 10% | Electronic setting<br>$t_2$ =0.05…0.5s (step 0.01s)<br>Tolerance: ± 10%[4] |
| I<br>CAN BE EXCLUDED | Against short-circuit with instantaneous trip | | Manual setting<br>$I_3$ = 1.5 - 2.5 - 3 - 4 - 4.5 - 5 - 5.5 - 6.5 - 7 - 7.5 - 8 - 9 - 9.5 - 10.5 - 12 x In[3] | instantaneous |
| | | | Electronic setting<br>$I_3$ = 1.5…12 x In (step 0.1 x In) [3]<br>Tolerance: ± 10% | |
| G<br>CAN BE EXCLUDED | Against ground fault with inverse short time delay trip and trip characteristic according to an inverse time curve ($I^2t$= constant) | | Manual setting<br>$I_4$ = 0.2 - 0.25 - 0.45 - 0.55 - 0.75 - 0.8 - 1 x In | Manual setting<br>up to 3.15 x $I_4$ $t_4$ = 0.1s; up to 2.25 x $I_4$ $t_4$ = 0.2s; up to 1.6 x $I_4$ $t_4$ = 0.4s; up to 1.10 x $I_4$ $t_4$=0.8s |
| | | | Electronic setting<br>$I_4$ = 0.2…1 x In (step 0.01 x In)<br>Tolerance: ± 10% | Electronic setting<br>$t_4$ = 0.1...0.8 x In (step 0.01s)<br>Tolerance: ± 20% |

[1] These tolerances hold in the following conditions:
– self-powered relay at full power and/or auxiliary supply;
– two or three-phase power supply.
In conditions other than those considered, the following tolerances hold:

| | Trip time |
|---|---|
| S | ± 20% |
| G | ± 20% |

[2] For T5 In = 600 A $t_1$ = 10.5s
[3] For T5 In = 600 A $I_3$max = 9.5 x In
$I_2$max = 9.5 x In
[4] Tolerance: ± 10 ms up to $t_2$ = 0.1s

# Tmax molded case circuit breakers
# Power distribution circuit breakers

## PR231/P – Tmax T7

The PR231/P trip unit is the basic trip unit for Tmax T7. It provides protection functions against overload L and short-circuit S/I (version PR231/P-LS/I). With this version you can choose whether to have protection S or protection I by moving the dedicated dip-switch. Alternatively the version with only the protection function against instantaneous short-circuit I is available (version PR231/P-I see also page 2/33 and following).
Setting the trip parameters of the PR231/P trip unit is done directly on the front of the circuit breaker by means of dip switches. There is only one for the phases and the neutral, so it is possible to set the protection threshold at 50% or at 100% of the phase protection.
To provide protection of the installation by means of the PR231/P protection trip unit, it is necessary to select the rated network frequency (50/60 Hz), using the special dip-switch.
Interchangeability of PR231/P can be requested by means of a dedicated code.

## PR231/P


## PR231/P - Protection functions and settings

| Protection functions | | Trip threshold | Trip curves[1] | Excludability | Relation t = f(I) |
|---|---|---|---|---|---|
| L<br>CANNOT BE EXCLUDED | Against overload with long inverse time delay trip and trip characteristic according to an inverse time curve ($I^2t$=constant) | $I_1$ = 0.40...1 x In step = 0.04 x In<br>Trip between 1.1...1.3 x $I_1$<br>IEC 60947-2<br>UL 489 | at 6 x $I_1$ at 6 x $I_1$<br>$t_1$ = 3 - 12s<br>Tolerance: ±10% | – | $t = k/I^2$ |
| S<br>CAN BE EXCLUDED | Against short-circuit with long inverse time delay trip and trip characteristic with inverse time ($I^2t$=constant) (selectable as an alternative to protection function I) | $I_2$ = 1-1.5-2-2.5-3-3.5-4.5-5.5-6.5-7-7.5-8-8.5-9-10 x In<br>Tolerance: ±10% | at 10 x In at 10 x In<br>$t_2$ = 0.1 - 0.25s<br>Tolerance: ±10% | • | $t = k/I^2$ |
| I<br>CAN BE EXCLUDED | Against short-circuit with istantaneous trip (selectable as an alternative to protection function S) | $I_3$ = 1-1.5-2-2.5-3-3.5-4.5-5.5-6.5-7-7.5-8-8.5-9-10 x In<br>Tolerance: ±10% | instantaneous | – | t = k |

[1] These tolerances hold in the following conditions:
– self-powered trip unit at full power
– two or three-phase power supply
In conditions other than those considered, the following tollerances hold:

| | Trip threshold | Trip time |
|---|---|---|
| S | ± 10% | ± 20% |
| I | ± 15% | ≤ 60ms |

# Tmax molded case circuit breakers
# Power distribution circuit breakers

## PR232/P – Tmax T7

The PR232/P trip unit, available for T7, provides protection functions against overload L, delayed short-circuit S and instantaneous short-circuit I (version PR232/P-LSI).
Setting the trip parameters (see table) of the PR232/P trip unit can be carried out by means of the dip-switches it is unique for the phases and the neutral, for which it is possible to set the protection threshold to OFF, to 50%, 100% or 200% of the threshold of the phases directly from the front of the trip unit with a special dip-switch. In particular, adjustment of the neutral to 200% of the phase current requires setting protection L to respect the current-carrying capacity of the circuit breaker.
To provide protection of the installation by means of the PR232/P protection trip unit, it is necessary to select the rated network frequency (50/60 Hz) with the special dip-switch.

## PR232/P

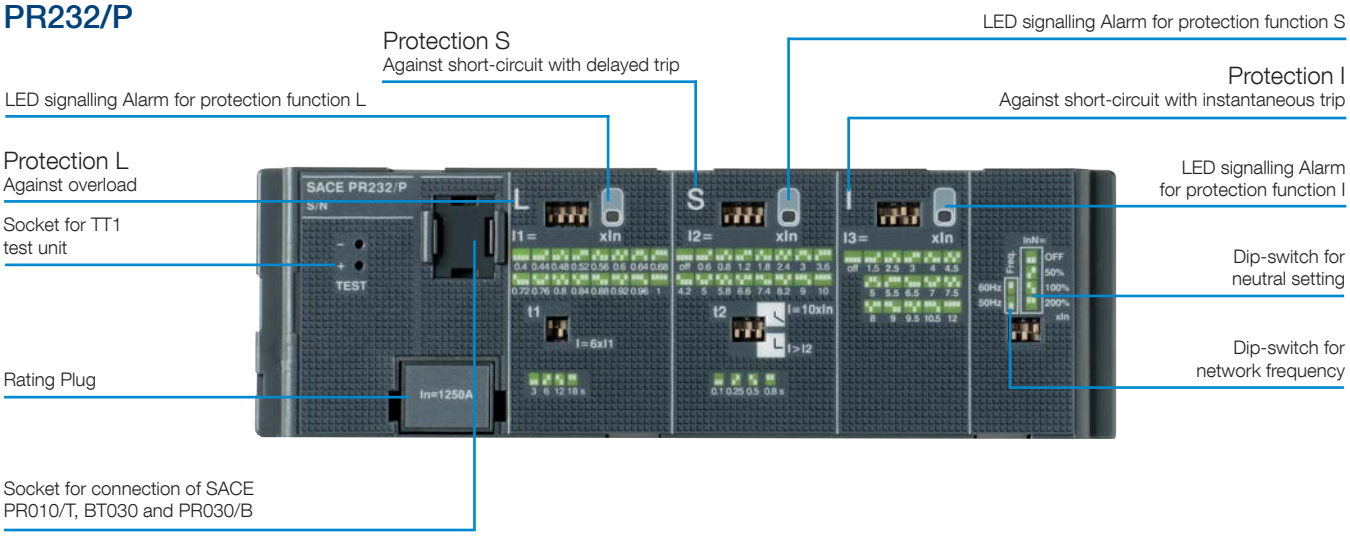


## PR232/P - Protection functions and settings

| Protection functions | | Trip threshold | Trip curves[1] | Thermal memory[2] | Excludability | Relation t = f(I) |
|---|---|---|---|---|---|---|
| L<br>CANNOT BE EXCLUDED | Against overload with long inverse time delay trip and trip characteristic according to an inverse time curve ($I^2t$=constant) | $I_1$ = 0.40...1 x In step = 0.04 x In<br>Trip between 1.1...1.3 x $I_1$<br>IEC 60947-2<br>UL 489 | at 6 x $I_1$<br>$t_1$ = 3s $t_1$ = 6s $t_1$ = 12s $t_1$ = 18s<br>Tolerance: ±10% | • | – | $t = k/I^2$ |
| S<br>CAN BE EXCLUDED | Against short-circuit with inverse short time delay trip and trip characteristic with inverse time ($I^2t$=constant) or definite time | $I_2$ = 0.6 - 0.8 - 1.2 - 1.8 - 2.4 - 3 - 3.6 - 4.2 - 5 - 5.8 - 6.6 - 7.4 - 8.2 - 9 - 10 x In<br>Tolerance: ±10% | at 10 x In<br>$t_2$=0.1s $t_2$=0.25s $t_2$=0.5s $t_2$=0.8s<br>Tolerance: ±10% | • | • | $t = k/I^2$ |
| | | $I_2$ = 0.6 - 0.8 - 1.2 - 1.8 - 2.4 - 3 - 3.6 - 4.2 - 5 - 5.8 - 6.6 - 7.4 - 8.2 - 9 - 10 x In<br>Tolerance: ±10% | $I > I_2$<br>$t_2$=0.1s $t_2$=0.25s $t_2$=0.5s $t_2$=0.8s<br>Tolerance: ±10% | – | • | t = k |
| I<br>CAN BE EXCLUDED | Against short-circuit with istantaneous trip | $I_3$ = 1.5 - 2.5 - 3 - 4 - 4.5 - 5 - 5.5 - 6.5 - 7 - 7.5 - 8 - 9 - 9.5 - 10.5 - 12 x In<br>Tolerance: ±10% | instantaneous | – | • | t = k |

[1] These tolerances hold in the following conditions:
– self-powered trip unit at full power (without start-up)
– two or three-phase power supply

In conditions other than those considered, the following tollerances hold:

| | Trip threshold | Trip time |
|---|---|---|
| S | ± 10% | ± 20% |
| I | ± 15% | ≤ 60ms |

[2] Active up to 7 min. after tripping of the breaker (ON/OFF setting by means of PR010/T test unit).

# Tmax molded case circuit breakers
## Power distribution circuit breakers

There are three red LEDs available on the front of the PR232/P trip unit dedicated to the signalling alarm of protections L, S, and I. Furthermore, a yellow flashing LED allows the state of pre-alarm of function L to be signalled, which is activated when 90% of the set trip threshold is reached. The yellow flashing LED every 3s indicates the normal operation.

### PR232/P - Alarm and Pre-alarm LED

| Protection | Colour | Pre-alarm | Alarm | Last trip |
|---|---|---|---|---|
| L | Yellow | • | – | – |
| | Red | – | • | • |
| S | Red | – | • | • |
| I | Red | – | • | • |

Following circuit breaker opening, it is possible to know which protection function made the trip unit trip by connecting the PR030/B battery unit onto the front of the trip unit. This is also possible thanks to the PR010/T test and configuration unit.
By means of the BT030 wireless communication unit the PR232/P can be connected to a PDA or to a personal computer, extending the range of information available for the user. In fact, by means of the ABB SACE's SD-Pocket communication software, it is possible to read the values of the currents flowing through the circuit breaker, the value of the last 20 interrupted currents, and the protection settings.

# Tmax molded case circuit breakers
# Power distribution circuit breakers

## PR331/P – Tmax T7 and T8

The PR331/P, available for Tmax T7 and T8 in the PR331/P-LSIG version, is suitable for protecting a wide range of alternating current installations with its complete range of protection functions together with the wide combination of thresholds and trip times offered. In addition the unit is provided with multifunction LED indicators. Furthermore, PR331/P allows connection to external devices enhancing its advanced characteristics like remote signalling and monitoring, or interface from front of HMI030 panel.

### PR331/P

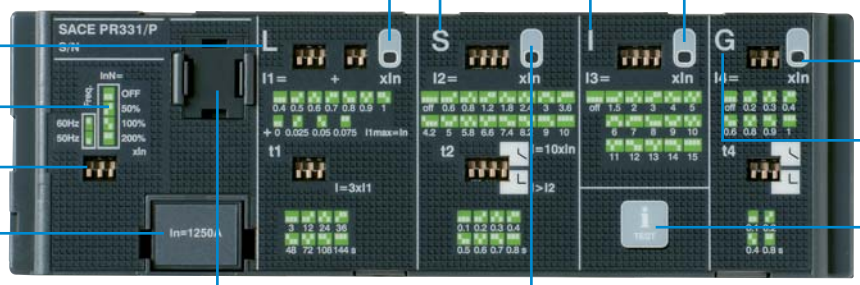


Protection S
Against short-circuit with delayed trip

Protection I
Against short-circuit with instantaneous trip

LED signalling Alarm and prealarm for protection function L

LED signalling Alarm for protection function I

Protection L
Against overload

LED signalling Alarm for protection function G

Dip-switch for neutral setting

Protection G
Against ground fault

Dip-switch for network frequency

Info/test push button

Rating Plug

Socket for connection of SACE PR010/T, BT030 and PR030/B

LED signalling Alarm for protection function S

## PR331/P - Protection functions and settings

| | Protection functions | Trip threshold | Trip curves[1] | Excludability | Relation t = f(I) |
|---|---|---|---|---|---|
| L<br>CANNOT BE EXCLUDED | Against overload with long inverse time-delay trip and trip characteristic according to an inverse time curva ($I^2t=k$) | $I_1$ = 0.40….1 x In step = 0.025 x In<br>Trip between 1.05 ... 1.2 x $I_1$ | at 3 x $I_1$<br>$t_1$ = 3 - 12 - 24 - 36 - 48 - 72 - 108 - 144s<br>Tolerance: ±10% up to 6 x In<br>±20% above 6 x In | – | $t = k/I^2$ |
| S<br>CAN BE EXCLUDED | Against short-circuit with short inverse time-delay trip and trip characteristic with inverse time ($I^2t=k$) or with definite time | $I_2$ = 0.6 - 0.8 - 1.2 - 1.8 - 2.4 - 3 - 3.6 - 4.2 - 5 - 5.8 - 6.6 - 7.4 - 8.2 - 9 - 10 x In<br>Tolerance: ±7% up to 6 x In<br>±10% above 6 x In | at 10 x In<br>$t_2$ = 0.1….0.8s step = 0.1s<br>Tolerance: min (±10%. ±40ms) | • | $t = k/I^2$ |
| | | $I_2$ = 0.6 - 0.8 - 1.2 - 1.8 - 2.4 - 3 - 3.6 - 4.2 - 5 - 5.8 - 6.6 - 7.4 - 8.2 - 9 - 10 x In<br>Tolerance: ±7% up to 6 x In<br>±10% above 6 x In | $I > I_2$<br>$t_2$ = 0.1….0.8s step = 0.1s<br>Tolerance: ±15% up to 6 x In<br>±20% above 6 x In | • | t = k |
| I<br>CAN BE EXCLUDED | Against short-circuit with adjustable instantaneous trip | $I_3$ = 1.5 - 2 - 3 - 4 - 5 - 6 - 7 - 8 - 9 - 10 - 11 - 12 - 13 - 14 - 15 x In[2]<br>Tolerance: ±10% | ≤ 30 ms | • | t = k |
| G<br>CAN BE EXCLUDED | Against ground fault with short inverse time-delay trip and trip characteristic according to an inverse time curve ($I^2t=k$) or with definite time | $I_4$ = 0.2 - 0.3 - 0.4 - 0.6 - 0.8 - 0.9 - 1 x In<br>Tolerance: ±7% | 4.47 x $I_4$ 3.16 x $I_4$ 2.24 x $I_4$ 1.58 x $I_4$<br>$t_4$=0.1s $t_4$=0.2s $t_4$=0.4s $t_4$=0.80s<br>Tolerance: ±15% | • | $t = k/I^2$ [3] |
| | | $I_4$ = 0.2 - 0.3 - 0.4 - 0.6 - 0.8 - 0.9 - 1 x In<br>Tolerance: ±7% | $t_4$=0.1s $t_4$=0.2s $t_4$=0.4s $t_4$=0.80s<br>Tolerance: min (±10%. ±40ms) | • | t = k |

[1] These tolerances hold in the following conditions:
– self-powered trip unit at full power and/or auxiliary supply
– two or three-phase power supply
In conditions other than those considered, the following tollerances hold:

| | Trip threshold | Trip time |
|---|---|---|
| L | Release between 1.05 and 1.25 x $I_1$ | ± 20% |
| S | ± 10% | ± 20% |
| I | ± 15% | ≤ 60ms |
| G | ± 15% | ± 20% |

[2] For T7 In = 1200 A - $I_3$max = 12 x In
[3] $t = k/I^2$ up to the current value indicated, t = k equating to the chosen setting) beyond the current value indicated

# Tmax molded case circuit breakers
# Power distribution circuit breakers

## User interface

The user communicates directly with the trip unit by means of the dip switches. Up to four LEDs (according to the version) are also available for signalling. These LEDs (one for each protection) are active when:

- a protection is timing. For protection L the pre-alarm status is also shown;
- a protection has tripped (the corresponding LED is activated by pressing the “Info/Test” pushbutton);
- a failure in connection of a current sensor or in the trip coil is detected. The indication is active when the unit is powered (through current sensors or an auxiliary power supply)
- wrong rating plug for the circuit breaker.

The protection tripped indication works even with the circuit breaker open, without the need for any internal or external auxiliary power supply. This information is available for 48 hours of inactivity after the trip and is still available after reclosing. If the query is made more than 48 hours later it is sufficient to connect a PR030/B battery unit, PR010/T, or a BT030 wireless communication unit.

## Setting the neutral

Protection of the neutral can be set at 50%, 100% or 200% of the phase currents. In particular, adjustment of the neutral at 200% of the phase current is possible if the following inequality is respected:
$I_1$ x In x %N < Iu. The user can also switch the neutral protection OFF.

## Test function

The Test function is carried out by means of the Info/Test pushbutton and the PR030/B battery unit (or BT030) fitted with a polarized connector housed on the bottom of the box, which allows the device to be connected to the test connector on the front of PR331/P trip units. The PR331/P electronic trip unit can be tested by using the SACE PR010/T test and configuration unit by connecting it to the TEST connector.

## Power supply

The unit does not require an external power supply for protection functions or for alarm signalling functions. It is self-supplied by means of the current sensors installed on the circuit breaker.
For operation, it is required for the three phases to be passed through by a current of 70 A. An external power supply can be connected in order to activate additional features, and in particular for connection to external devices: HMI030 and PR021/K.

## PR331/P - Electrical characteristics

| | |
|---|---|
| Auxiliary power supply (galvanically insulated) | 24 V DC ± 20% |
| Maximum ripple | ± 5% |
| Inrush current @ 24 V | ~1 A for 5 ms |
| Rated power @ 24 V | ~2 W |

## Communication

By means of the BT030 wireless communication unit, PR331/P can be connected to a PDA or to a personal computer, extending the range of information available for the user. In fact, using ABB’s SD-Pocket communication software, it is possible to read the values of the currents flowing through the circuit breaker, the value of the last 20 interrupted currents, and the protection settings.
PR331/P can also be connected to the optional external PR021/K signalling unit, for the remote signalling of protections alarms and trips, and to HMI030, for the remote user interfacing.

# Tmax molded case circuit breakers
# Power distribution circuit breakers

## PR332/P – Tmax T7 and T8

The SACE PR332/P trip unit for Tmax T7 and T8 (available in three versions: PR332/P-LI, PR332/P-LSI, PR332/P-LSIG) is a sophisticated and flexible protection system based on a state-of-the art microprocessor and DSP technology. Fitted with the optional internal PR330/D-M dialogue unit, PR332/P turns into an intelligent protection, measurement and communication device based on the Modbus® RTU protocol. By means of the PR330/D-M, PR332/P can also be connected to the ABB EP010 Fieldbus plug adapter, which makes it possible to choose among several different networks, such as Profibus and DeviceNet.
The new PR332/P is the result of ABB SACE's experience in designing trip units. The exhaustive range of settings makes this protection unit ideal for general use in power distribution.
Access to information and programming using a keyboard and graphic liquid crystal display is extremely simple and intuitive. An integrated ammeter and many other additional features are provided over and above the protection functions. These additional functions can be further increased with addition on board of the dialogue, signalling, measurement, and wireless communication units. All the thresholds and trip curve delays of the protection functions are stored in special memories which retain the information even when no power is supplied.

## PR332/P


## PR332/P with PR330/V

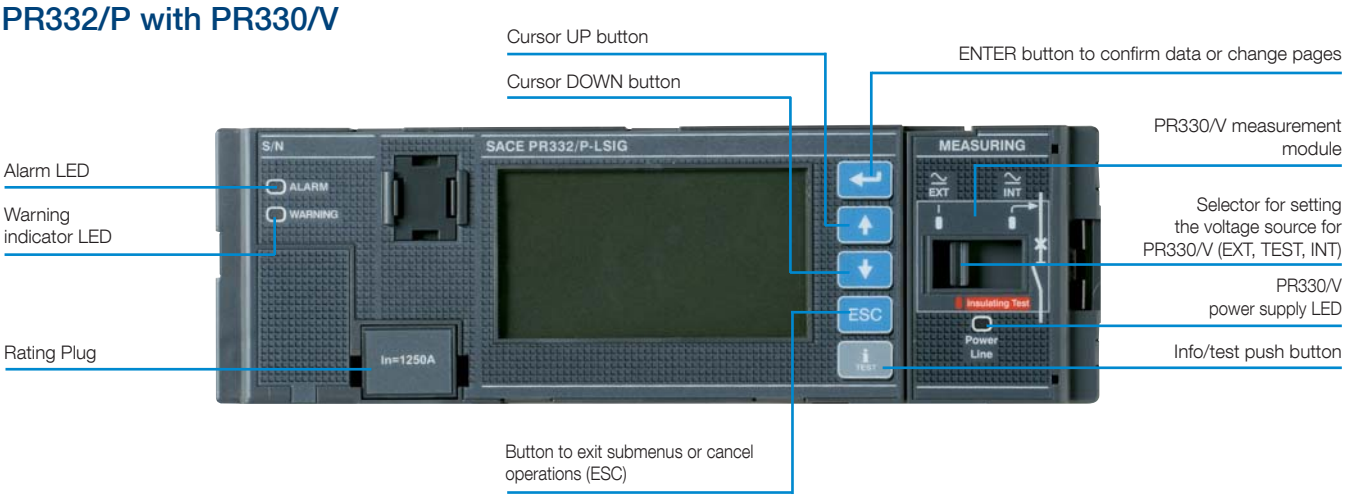

# Tmax molded case circuit breakers
# Power distribution circuit breakers

## PR332/P - Protection functions and settings

| Protection functions | | Trip threshold | Trip curves[1] | Excludability | Relation t = f(I) | Thermal memory[2] | Zone selectivity[2] |
|---|---|---|---|---|---|---|---|
| L | Against overload with inverse long-time delay trip | $I_1$ = 0.4…1 x In step = 0.01 x In<br>Trip between 1.05...1.2 x $I_1$ | at I = 3 x $I_1$<br>$t_2$ = 3…144s step = 3s<br>Tolerance: ±10% up to 6 x In<br>±20% above 6 x In | – | $t = k/I^2$ | • | – |
| | | $I_1$ = 0.4…1 x In step = 0.01 x In<br>Trip between 1.05...1.2 x $I_1$ | $t_2$ = 3…144s step = 3s<br>Tolerance: ±10% up to 6 x In<br>±20% above 6 x In | • | t = f(?)[3]<br>? = 0.02-1-2 | • | – |
| S | Against short-circuit with short inverse time-delay trip and trip characteristic with inverse time ($I^2t$=k) or with definite time | $I_2$ = 0.6…10 x In step = 0.1 x In<br>Tolerance: ±7% up to 6 x In<br>±10% above 6 x In | at 10 x In<br>$t_2$ = 0.05…0.8s step = 0.01s<br>Tolerance: ±15% up to 6 x In<br>±20% over 6 x In | • | $t = k/I^2$ | • | – |
| | | $I_2$ = 0.6…10 x In step = 0.1 x In<br>Tolerance: ±7% up to 6 x In<br>±10% above 6 x In | $t_2$ = 0.05…0.8s step = 0.01s<br>$t_2$ sel = 0.04...0.2s step = 0.01s<br>Tolerance: min (±10%; ±40ms) | • | t = k | – | • |
| I | Against short-circuit with adjustable instantaneous trip | $I_3$ = 1.5…15 x In step = 0.1 x In<br>Tolerance: ±10% | ≤ 30 ms | • | t = k | – | – |
| G | Against ground fault with short inverse time-delay trip and trip characteristic according to an inverse time curve ($I^2t$=k) or with definite time | $I_4$ = 0.2…1 x In step = 0.02 x In<br>Tolerance: ±7% | $t_4$ = 0.1…1s step = 0.05s<br>Tolerance: ±15% | • | $t = k/I^2$ [5] | – | – |
| | | $I_4$ = 0.2…1 x In step = 0.02 x In<br>Tolerance: ±7% | $t_4$ = 0.1…1s step = 0.05s<br>$t_4$ sel = 0.04...0.2s step = 0.05s<br>Tolerance: min (±10%; ±40ms) | • | t = k | – | • |
| OT | Against overtemperature of the trip unit with instantaneous trip | Trip unit temperature over 85 °C | instantaneous | – | temp =k | – | – |
| U | Against unbalanced phase with definite time-delay trip | $I_6$ = 2%…90% x $I_1$ step = 1% x $I_1$<br>Tolerance: ±10% | $t_6$ = 0.5…60 s step = 0.5s<br>Tolerance: min (±20%; ±100ms) | • | t = k | – | – |

## PR332/P with PR330/V - Advanced protection functions and settings

| Advanced protection functions | | Trip threshold | Trip curves[1] | Excludability | Relation t = f(I) | Thermal memory[2] | Zone selectivity |
|---|---|---|---|---|---|---|---|
| UV | Against undervoltage with adjustable constant time | $U_8$= 0.5…0.95 x Un step = 0.01 x Un<br>Tolerance: ±5% | $t_8$ = 0.1…5s step = 0.1s<br>Tolerance: min (±20% ±100ms) | • | t = k | – | – |
| OV | Against overvoltage with adjustable constant time | $U_9$= 1.05...1.2 x Un step = 0.01 x Un<br>Tolerance: ±5% | $t_9$ = 0.1…5s step = 0.1s<br>Tolerance: min (±20% ±100ms) | • | t = k | – | – |
| RV | Against residual voltage with adjustable constant time | $U_{10}$= 0.1…0.4 x Un step = 0.01 x Un<br>Tolerance: ±5% | $t_{10}$ = 0.5…30s step = 0.5s<br>Tolerance: min (±10% ±100ms) | • | t = k | – | – |
| RP | Against reversal of power with adjustable constant time | $P_{11}$= -0.3…-0.1 x Pn step = 0.02xPn<br>Tolerance: ±10% | $t_{11}$ = 0.5…25s step = 0.1s<br>Tolerance: min (±10% ±100ms) | • | t = k | – | – |
| UF | Against underfrequency with adjustable constant time | $f_{12}$= 0.90…0.99 x fn step = 0.01 x fn<br>Tolerance:±5% | $t_{12}$ = 0.5…3s step = 0.1s<br>Tolerance: min (±10% ±100ms) | • | t = k | – | – |
| OF | Against overfrequency with adjustable constant time | $f_{13}$= 1.01…1.10 x fn step = 0.01 x fn<br>Tolerance:±5% | $t_{13}$ = 0.5…3s step = 0.1s<br>Tolerance: min (±10% ±100ms) | • | t = k | – | – |

[1] These tolerances are valid under the following conditions:
– trip unit self-supplied at full power and/or auxiliary supply
– two or three-phase power supply
In conditions other than those considered, the following tollerances hold:

| | Trip threshold | Trip time |
|---|---|---|
| L | Release between 1.05 and 1.25 x $I_1$ | ± 20% |
| S | ± 10% | ± 20% |
| I | ± 15% | ≤ 60ms |
| G | ± 15% | ± 20% |
| Other | ± 10% | ± 20% |

[2] Active with 24V auxiliary power supply

[3] $t = \frac{(3^{?} - 1)}{\left(\frac{I}{I_1}\right)^{?} - 1} t_1 \, (3 \times I_1)$

[4] For T7 In = 1000 A - $I_3$max = 12 x In

[5] $k = (2s) \cdot (I_4)^2$

## Setting the neutral

In PR332/P, the neutral protection is 50% of the value set for phase protection in the standard version. The neutral protection can be excluded or set to 100%.
In installations where very high harmonics occur, the resulting current at the neutral can be higher than that of the phases. Therefore it is possible to set the neutral protection at 150% or 200% of the value set for the phases. In this case it is necessary to reduce the setting of L protection accordingly. The table below lists the neutral settings for the various possible combinations between type of circuit breaker and the threshold $I_1$ setting.

## Adjustable neutral protection settings

| | Threshold $I_1$ settings (overload protection) | | |
|---|---|---|---|
| Circuit breaker model | $0.4 < I_1 < 0.5$ | $0.5 < I_1 < 0.66$ | $0.66 < I_1 < 1$ (*) |
| T7-T8 | 0-50-100-150-200% | 0-50-100-150% | 0-50-100% |

(*) The setting $I_1$ =1 indicates the maximum overload protection setting. The actual maximum setting allowable must take into account any derating based on temperature, the terminals used and the altitude (see the "Installations" chapter)

## Start-up function

The start-up function allows protections S, I and G to operate with higher trip thresholds during the start-up phase. This avoids untimely tripping caused by the high inrush currents of certain loads (motors, transformers, lamps).
The start-up phase lasts from 100 ms to 30 s, in steps of 0.01 s. It is automatically recognized by the PR332/P trip unit when the peak value of the maximum current exceeds the threshold that can be set by the user. A new start-up becomes possible after the current has fallen down to 0.1 x In, if the trip unit is supplied from an external source.

## Protection against overtemperature

The user has the following signals or commands available for protection against overtemperature:
- lighting up of the "Warning" LED when the temperature is higher than 70 °C or lower than -20 °C (temperature at which the microprocessor is still able to operate correctly);
- lighting up of the "Alarm" LED when the temperature is higher than 85 °C or lower than -25 °C (temperature above which the microprocessor can no longer guarantee correct operation) and, when decided during the unit configuration stage, simultaneous opening of the circuit breaker with indication of the trip directly on the display, as for the other protections.

## Self-diagnosis

The PR332/P range of trip units contains an electronic circuit which periodically checks the continuity of internal connections (trip coil and each current sensor, including the Source Ground Return when present).
In the case of a malfunction an alarm message appears directly on the display. The Alarm is highlighted by the Alarm LED as well.

## Test Functions

Once enabled from the menu, the "Info/Test" pushbutton on the front of the trip unit allows correct operation of the chain consisting of the microprocessor, trip coil and circuit breaker tripping mechanism to be checked.
The control menu also includes the option of testing correct operation of the display, signalling LEDs.
By means of the front multi-pin connector it is possible to apply a SACE PR010/T Test unit which allows the functions of the PR222DS/P, PR222DS/PD-A, PR232/P, PR331/P and PR332/P ranges of trip units to be tested and checked.

## User interface

The human-machine interface (HMI) of the device is made up of a wide graphic display, LEDs, and browsing pushbuttons. The interface is designed to provide maximum simplicity.
The language can be selected from among five available options: Italian, English, German, French and Spanish.
As in the previous generation of trip units, a password system is used to manage the "Read" or "Edit" modes. The default password, 0001, can be modified by the user.
The protection parameters (curves and trip thresholds) can be set directly via the HMI of the device. The parameters can only be changed when the trip unit is operating in "Edit" mode, but the information available and the parameter settings can be checked at any time in "Read" mode.
When a communication device (internal PR330/D-M module or external BT030 device) is connected, it is possible to set parameters simply by downloading them into the unit (over the network for PR330/D-M, by using the SD-Pocket software and a PDA or a notebook for BT030).
Settings can then be carried out quickly and automatically in an error-free way by transferring data directly from DocWin.

## Indicator LEDs

LEDs on the front panel of the trip unit are used to indicate all the warnings and alarms. A message on the display always explicitly indicates the type of event that has concerned.
Example of events indicated by the “WARNING” LED:
– unbalance between phases;
– pre-alarm for overload (L1>90% x $I_1$);
– first temperature threshold exceeded (70 °C);
– contact wear beyond 80%;
– phase rotation reversed (with optional PR330/V).

Example of events indicated by the “ALARM” LED:
– timing of function L;
– timing of function S;
– timing of function G;
– second temperature threshold exceeded (85 °C);
– contact wear 100%;
– timing of Reverse Power flow protection (with optional PR330/V).

## Data logger

PR332/P is provided with the Data Logger function that automatically records the instantaneous values of all the currents and voltages in a wide memory buffer. Data can be easily downloaded from the unit by means of SD-Pocket or SD-TestBus2 applications and can be transferred to any personal computer for elaboration. The function freezes the recording whenever a trip occurs or in case of other events, so that a detailed analysis of faults can be easily performed. SD-Pocket and SD-TestBus2 also allow reading and downloading of all the other trip information.
- Number of analog channels: 8
- Maximum sampling rate: 4800 Hz
- Maximum sampling time: 27 s (@ sampling rate 600 Hz)
- 64 events tracking.

## Trip information and opening data

In case a trip occurs PR332/P store all the needed information:
- Protection tripped
- Opening data (current)
- Time stamp (guaranteed with auxiliary supply or self-supply with power failure no longer than 48h).

By pushing the “Info/Test” pushbutton the trip unit shows all these data directly on display.
No auxiliary power supply is needed. The information is available to user for 48 hours with the circuit breaker open or without current flowing.
The information of the latest 20 trips are stored in memory.
If the information can be furthermore retrieved more than 48 hours later, it is sufficient to connect a PR030/B battery unit or a BT030 wireless communication unit.

## Load control

Load control makes it possible to engage/disengage individual loads on the load side before the overload protection L is tripped, thereby avoiding unnecessary trips of the circuit breaker on the supply side. This is done by means of contactors or disconnect switches (externally wired to the trip unit), controlled by the PR332/P through PR021/K unit.
Two different Load Control schemes can be implemented:
– disconnection of two separate loads, with different current thresholds
– connection and disconnection of a load, with hysteresis.
Current thresholds and trip times are smaller than those available for selection with protection L, so that load control can be used to prevent overload tripping. External PR021/K accessory unit is required for Load Control. The function is only active when an auxiliary power supply is available.

## PR330/V Measurement Module

This optional internal module, installed in PR332/P, allows the trip unit to measure the phase and neutral voltages and to process them in order to achieve a series of features, in terms of protection and measurement.
The PR330/V module when ordered mounted on the circuit breaker, does not require any external connection or voltage transformers since it is connected internally to the upper terminals of Tmax T7 (selector in “INT” position) through the internal voltage sockets. When necessary, the connection of voltage pick-ups can be moved to any other point (i.e. lower terminals), by using the alternative connection located in the terminal box and by switching the selector to the “EXT” position. For the dielectric test of the circuit breaker the selector must be switched to the “Insulating TEST” position. PR330/V is able to energize the PR332/P while line voltage input is above 85 V. The use of Voltage Transformers is mandatory for rated voltages higher than 690 V.
Voltage transformers shall have burdens between 5 VA and 10 VA and accuracy class 0.5 or better.
Additional Protections with PR330/V:
- Undervoltage (UV) protection
- Overvoltage (OV) protection
- Residual voltage (RV) protection
- Reversal of power (RP) protection
- Underfrequency (UF) protection
- Overfrequency (OF) protection.

All the above indicated protections can be excluded, although it is possible to leave only the alarm active when required: in this case the trip unit will indicate the “ALARM” status. With the circuit breaker closed, these protections also operate when the trip unit is self-supplied. With the circuit breaker open, they operate when the auxiliary power supply (24 V DC or PR330/V) is present.

## Measurement function

The current measurement function (ammeter) is present on all versions of the PR332/P trip unit. The display shows histograms showing the currents of the three phases and neutral on the main page. Furthermore, the most loaded phase current is indicated in numerical format. Ground fault current, where applicable, is shown on a dedicated page.
The latter current value takes on two different meanings depending on whether the external toroidal transformer for the “Source Ground Return” function or the internal transformer (residual type) is connected.
The ammeter can operate either with self-supply or with an auxiliary power supply voltage. The display is rear-lit and the ammeter is active even at current levels lower than 160 A.
Accuracy of the ammeter measurement chain (current sensor plus ammeter) is no more than 1.5% in the 0.3-6 x In current interval of In.
- Currents: three phases (L1, L2, L3), neutral (Ne) and ground fault;
- Instantaneous values of currents during a period of time (data logger);
- Maintenance: number of operations, percentage of contact wear, opening data storage (last 20 trips and 20 events).

When the optional PR330/V is connected the following additional measurement functions are present:
- Voltage: phase-phase, phase-neutral and residual voltage
- Instantaneous values of voltages during a period of time (data logger)
- Power: active, reactive and apparent
- Power factor
- Frequency and peak factor
- Energy: active, reactive, apparent, counter.

## Communication

PR332/P electronic trip unit can be fitted with communication modules, which make possible to exchange data and information with other industrial electronic devices by means of a network.
The basic communication protocol implemented is Modbus RTU, a well-known standard of widespread use in industrial automation and power distribution equipment. A Modbus RTU communication interface can be connected immediately and exchange data with the wide range of industrial devices using the same protocol. ABB has developed a complete series of accessories for electronic trip unit PR332/P:

- PR330/D-M is the communication module for PR332/P protection trip units. It is designed to allow easy integration of the Tmax circuit breakers in a Modbus network. The Modbus RTU protocol is used widely in the power and the automation industries. It is based on a master/slave architecture, with a bandrate of up to 19.2 kbps. A standard Modbus network is easily wired up and configured by means of an RS485 physical layer. ABB SACE trip units work as slaves in the field bus network. All information required for simple integration of PR330/D-M in an industrial communication system is available on the ABB Web page.
- BT030 is a device to be connected to the Test connector of PR222DS/P, PR222DS/PD-A, PR232/P, PR331/P and PR332/P trip units. It allows Bluetooth communication between the trip unit and a PDA or a Notebook with a Bluetooth port. This device is dedicated to use with the SD-Pocket or SD-TestBus2 application. It can provide the auxiliary supply needed to energize the protection trip unit by means of rechargeable batteries.
- EP010-FBP-PDP22 is the Fieldbus Plug interface allows connection of ABB SACE trip units with Modbus communication to a Profibus, DeviceNet, or AS-I field bus network.

Furthermore, a new generation of software dedicated to installation, configuration, supervision and control of protection trip units and circuit-breakers is now available:

- SD-View 2000
- SD-Pocket
- SD-TestBus2.

All information required for simple integration of PR330/D-M in an industrial communication system are available on the ABB Web page (http://www.abb.com).

## Measurement, signalling and available data functions

**Details about functions available on PR332/P, trip units with PR330/D-M and EP010 – FBP – PDP22 are listed in the table below:**

| Communication functions | PR332/P + PR330/D-M | PR332/P + PR330/D-M and EP010 |
|---|---|---|
| Protocol | Modbus RTU standard | FBP-PDP22 |
| Physical means | RS485 | Profibus-DP or DeviceNet cable |
| Speed (maximum) | 19.2 kbps | 115 kbps |
| **Measurement functions** | | |
| Phase currents | • | • |
| Neutral current | • | • |
| Ground current | • | • |
| Voltage (phase-phase, phase-neutral, residual) | opt.[1] | opt.[1] [2] |
| Power (active, reactive, apparent) | opt.[1] | opt.[1] [3] |
| Power factor | opt.[1] | [4] |
| Frequency and peak factor | opt.[1] | [4] |
| Energy (active, reactive, apparent) | opt.[1] | [4] |
| Harmonic analysis | – | – |
| **Signalling functions** | | |
| LED: auxiliary power supply, pre-alarm, alarm, transmission, reception | • | • |
| Temperature | • | • |
| Indication for L, S, I, G and other protection | • | • |
| **Available data** | | |
| Circuit breaker status (open, closed) | • | • |
| Circuit breaker position (racked-in, racked-out) | • | • |
| Mode (local, remote) | • | • |
| Protection parameters set | • | • |
| Load control parameters | • | • |
| **Alarms** | | |
| Protections: L, S, I, G | • | • |
| Undervoltage, overvoltage and residual voltage protection (timing and trip) | opt.[1] | opt.[1] |
| Reverse power protection (timing and trip) | opt.[1] | opt.[1] |
| Directional protection (timing and trip) | – | – |
| Underfrequency/overfrequency protection (timing and trip) | opt.[1] | opt.[1] |
| Phases rotation | – | – |
| Failed tripping under fault conditions | • | • |
| **Maintenance** | | |
| Total number of operations | • | • |
| Total number of trips | • | • |
| Number of trip tests | • | • |
| Number of manual operations | • | • |
| Number of separate trips for each protection function | • | • |
| Contact wear (%) | • | • |
| Record data of last trip | • | • |
| **Commands** | | |
| Circuit breaker open/close | • | • |
| Alarms reset | • | • |
| Setting of curves and protection thresholds | • | • |
| Synchronize system time | • | • |
| **Events** | | |
| Status changes in circuit breaker, protections and all alarms | • | • |

[1] With PR330/V
[2] No residual voltage
[3] No apparent power available
[4] Please ask ABB for further details

## Power supply

The PR332/P trip unit does not normally require any external power supplies, being self-supplied from the current sensors (CS): to activate the protection and ammeter functions, it is sufficient for at least one phase to have a current load higher than 80 A.
The unit ensures fully self-supplied operation. When an auxiliary power supply is present, it is also possible to use the unit with the circuit breaker either open or closed with very low current flowing through (<80 A).
It is also possible to use an auxiliary power supply provided by the PR030/B portable battery unit, which allows the protection functions to be set when the trip unit is not self supplied.
PR332/P stores and shows all the information needed after a trip (protection tripped, trip current, time, date). No auxiliary supply is required.

| | PR332/P | PR330/D-M |
|---|---|---|
| Auxiliary power supply (galvanically insulated) | 24 V DC ± 20% | from PR332/P |
| Maximum ripple | ± 5% | ± 5% |
| Inrush current @ 24 V | ~1 A for 5 ms | ~0.5 A for 5 ms |
| Rated power @ 24 V | ~3 W | +1 W |

(*) The setting $I_1$ =1 indicates the maximum overload protection setting. The actual maximum setting allowable must take into account any derating based on temperature, the terminals used and the altitude (see the "Installations" chapter)

# Tmax molded case circuit breakers
# Motor control protection circuit breakers : MCP

## Electrical characteristics

| Breaker type | | T2 | | T3 | Ts3 | | |
|---|---|---|---|---|---|---|---|
| Frame size | [A] | 100 | | 225 | 150 | | |
| Number of poles | [No.] | 3 | | 3 | 2-3-4 | | |
| Ratings | [A] | 20...100 | | 100...200 | 3...25 | 50...150 | 175...200 |
| Interrupting ratings | Frame type | S | H | S | L | L | L |
| | 240 V AC [kA rms] | 65 | 150 | 65 | 50 | 150 | 150 |
| | 480 V AC [kA rms] | 35 | 65 | 35 | 25 | 85 | 65 |
| | 600Y/347 V AC [kA rms] | - | - | 10 | - | - | - |
| | 600 V AC [kA rms] | - | - | - | 10 | 25 | - |
| | 500 V DC (3 poles in series) [kA rms] | - | - | 35 | 65(1) | 65 | 50 |
| | 600 V DC (3 poles in series) [kA rms] | - | - | - | 50 | 50 | - |
| Trip units | Magnetic only adjustable (6...12xIn) | • | | • | - | | |
| | Magnetic only adjustable (4...12xIn) | - | | - | • | | |

(1) Only for 25A rating

## Electrical characteristics (continued)

| Breaker type | | T4 | | | | T5 | | | | T6 | | | |
|---|---|---|---|---|---|---|---|---|---|---|---|---|---|
| Frame size | [A] | 250 | | | | 400-600 | | | | 800 | | | |
| Number of poles | [No.] | 3 | | | | 3 | | | | 3 | | | |
| Ratings | [A] | 100-150-250 | | | | 300-400-600 | | | | 600-800 | | | |
| Interrupting ratings | Frame type | N | S | H | L | N | S | H | L | N | S | H | L |
| | 240 V AC [kA rms] | 65 | 100 | 150 | 200 | 65 | 100 | 150 | 200 | 65 | 100 | 200 | 200 |
| | 480 V AC [kA rms] | 25 | 35 | 65 | 100 | 25 | 35 | 65 | 100 | 35 | 50 | 65 | 100 |
| | 600Y/347 V AC [kA rms] | - | - | - | - | - | - | - | - | - | - | - | - |
| | 600 V AC [kA rms] | 18 | 25 | 35 | 65 | 18 | 25 | 35 | 65 | 20 | 25 | 35 | 42 |
| | 500 V DC (3 poles in series) [kA rms] | - | - | - | - | - | - | - | - | - | - | - | - |
| | 600 V DC (3 poles in series) [kA rms] | - | - | - | - | - | - | - | - | - | - | - | - |
| Trip units | Electronic PR221DS-I | • | | | | • | | | | • | | | |

# Tmax molded case circuit breakers
# Motor control protection circuit breakers : MCP

## General characteristics

MCP circuit breakers are used to protect three phase asynchronous motors. The traditional system used for this purpose is based on three different devices: a circuit breaker for protection against short-circuit, a thermal relay for protection against overload and phase loss or unbalance of phase, and a contactor for motor switching. All this has to take into account the problems that arise at the moment of the motor starting. In particular, when selecting these devices, different factors must be taken into consideration, such as:

- the motor power;
- the diagram and type of starting;
- the type of motor: with cage rotor or with wound rotor;
- the fault current at the point of the network where the motor is installed.

ABB offers two different protection types:

- a magnetic only trip unit (MA) for Tmax T2 and T3 with adjustable threshold between 6…12 x In, for Ts3 with adjustable threshold between 4…12 x In;
- an electronic trip unit with only an instantaneous short circuit protection I, PR221DS-I for Tmax T4, T5 and T6, and PR231/P-I for Tmax T7.

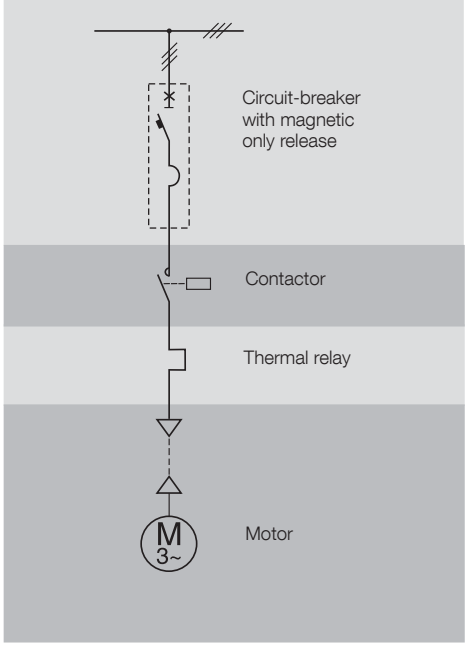


Protection against short-circuit

# Tmax molded case circuit breakers
# Motor control protection circuit breakers : MCP

## MA – Magnetic only trip unit (for T2 and T3)

| | In [A] | 20 | 50 | 100 | 125 | 150 | 200 |
|---|---|---|---|---|---|---|---|
| $I_3$ = 6...12 x In | T2 | • | • | • | | | |
| | T3 | | | • | • | • | • |
| | $I_3$ [A] | 120…240 | 300…600 | 600…1200 | 750…1500 | 900…1800 | 1200…2400 |

## MA – Magnetic only trip unit (for Ts3)

| | In [A] | 3 | 5 | 10 | 25 | 50 | 100 | 125 | 150 | 175 | 200 |
|---|---|---|---|---|---|---|---|---|---|---|---|
| $I_3$ = 4...12 x In | Ts3 | • | • | • | • | • | • | • | • | • | • |
| | $I_3$ [A] | 12…36 | 20…60 | 40…120 | 100…300 | 200…600 | 400…1200 | 500…1500 | 600…1800 | 700…2100 | 800…2400 |

## Electronic trip units

| In [A] | 100 | 150 | 250 | 300 | 400 | 600 | 800 | 1000 | 1200 |
|---|---|---|---|---|---|---|---|---|---|
| T4 | • | • | • | - | - | - | - | - | - |
| T5 | - | - | - | • | • | • | - | - | - |
| T6 | - | - | - | - | - | • | • | - | - |
| T7 | - | - | - | - | - | - | - | • | • |
| **Trip current function I** | | | | | | | | | |
| $I_3$ [A] | 100…1000 | 150…1500 | 250…2500 | 300…3000 | 400…4000 | 600…6000 | 800…8000 | 1000…12000 | 1200…14400 |

## PR221DS-I

| Protection function | | Trip threshold | Excludability | Relation t=f(I) |
|---|---|---|---|---|
| I | Against short-circuit with adjustable instantaneous trip | $I_3$ = 1 - 1.5 - 2 - 2.5 - 3 - 3.5 - 4.5 - 5.5 - 6.5 - 7 - 7.5 - 8 - 8.5 - 9 - 10 x In<br>Tolerance: ± 20% (T2)<br>± 10% (T4-T5, T6) | • | t = k |

Note: The tolerances are valid under the following hypotheses:
– relay self-supplied on running and/or auxiliary power supply (without start up)
– two-phase or three-phase power supply.

In all the cases not foreseen by the above-mentioned hypotheses, the following tolerance values are valid:

| | Trip threshold | Trip time |
|---|---|---|
| I | ± 20% | ≤ 40ms |

## PR231P-I

| Protection function | | Trip threshold | Excludability | Relation t=f(I) |
|---|---|---|---|---|
| I | Against short-circuit with adjustable instantaneous trip | $I_3$ = 1 - 1.5 - 2 - 2.5 - 3 - 3.5 - 4.5 - 5.5 - 6.5 - 7 - 7.5 - 8 - 8.5 - 9 - 10 x In<br>Tolerance: ± 10% | – | t = k |

Note: The tolerances are valid under the following hypotheses:
– relay self-supplied on running and/or auxiliary power supply (without start up)
– two-phase or three-phase power supply.

In all the cases not foreseen by the above-mentioned hypotheses, the following tolerance values are valid:

| | Trip threshold | Trip time |
|---|---|---|
| I | ± 15% | ≤ 60ms |

# Tmax molded case circuit breakers
# Molded case switch : MCS

## Electrical characteristics

The MCS can be used as a general circuit breakers in sub-switch-boards, switching and isolation parts for lines, busbars or groups of apparatus, or as bus-ties. They can be part of a general isolation device of groups of machines or of complexes for motor operation and protection.

The MCS are derived from the corresponding circuit breakers of which they keep the overall dimensions, versions, fixing systems and the possibility of mounting accessories. All the molded case switches in accordance with UL 489 and CSA C22.2 Standards are self protected.

## MCS

| Breaker type | | T1N | T3S | T3S | Ts3H | Ts3H |
|---|---|---|---|---|---|---|
| Frame size | [A] | 100 | 150 | 225 | 150 | 225 |
| Number of poles | [No.] | 3-4 | 3-4 | 3-4 | 3-4 | 3-4 |
| Magnetic override | [A] | 1000 | 1500 | 2250 | 1500 | 2250 |
| Rated voltage | AC (50-60 Hz) [V] | 600Y/347 | 600Y/347 | 600Y/347 | 600 | 480 |
| | DC [V] | 500 | 500 | 500 | 600 | 500 |

## MCS (continued)

| Breaker type | | T4N-S-H-L-V | T5N-S-H-L-V | T6H |
|---|---|---|---|---|
| Frame size | [A] | 250 | 400-600 | 800 |
| Number of poles | [No.] | 3-4 | 3-4 | 3-4 |
| Magnetic override | [A] | 3000 | 5000 | 10000 |
| Rated voltage | AC (50-60 Hz) [V] | 600 | 600 | 600 |
| | DC [V] | 600 | 600 | 600 |

## MCS (continued)

| Breaker type | | T7 | T8 |
|---|---|---|---|
| Frame size | [A] | 1200 | 2000-2500-3000 |
| Number of poles | [No.] | 3-4 | 3-4 |
| Magnetic override | [A] | 20000 | 40000 |
| Rated voltage | AC (50-60 Hz) [V] | 600 | 600 |
| | DC [V] | - | - |

## Isolation

MCS's main function is to isolate the circuit they are inserted in. Once the contacts are open they are at a distance which prevents an arc from striking, in accordance with the standards regarding isolation behaviour. The position of the operating lever corresponds with the position of the contacts (positive operation).

## Protection

Each molded case switch must be protected on the supply side by a device which safeguards it against short-circuits.

# Tmax molded case circuit breakers
# Molded case switch : MCS

## Electrical characteristics

Present 3 poles UL circuit breakers Tmax T2 H, Tmax T4 H and T4 V and Tmax T5 H 400 A and T5 V 400 A have been undergone to specific tests according to UL 489 in order to be classified as UL Current Limiting circuit breakers.
These breakers have peculiar characteristics in terms of limitation of peak current and limitation of specific let-through energy.
According to UL 489 standard, Current Limiting circuit breakers will be signed “Current Limiting” on the front and will have a label on the right side specifying peak current and specific let-through energy values.
Accessories and trip units are the same ones as those available for standard UL Tmax MCCBs.

### Tmax Current Limiting

| Breaker type | | T2 | T4 | | T5 | |
|---|---|---|---|---|---|---|
| Frame size | [A] | 100 | 250 | | 400 | |
| Number of poles | [No.] | 3 | 3 | | 3 | |
| Rated voltage | AC (50-60 Hz) [V] | 480 | 600 | | 600 | |
| | DC [V] | | 600 | | 600 | |
| Interrupting ratings | Frame type | H | H | V | H | V |
| | 240 V AC [kA rms] | 150 | 150 | 200 | 150 | 200 |
| | 277 V AC [kA rms] | - | - | - | - | - |
| | 347 V AC [kA rms] | - | - | - | - | - |
| | 480 V AC [kA rms] | 65 | 65 | 150 | 65 | 150 |
| | 600Y/347 V AC [kA rms] | - | - | - | - | - |
| | 600 V AC [kA rms] | - | 35 | 100 | 35 | 100 |
| | 250 V DC (2 poles in series) [kA rms] | - | - | - | - | - |
| | 500 V DC (3 poles in series) [kA rms] | - | - | - | - | - |
| | 500 V DC (2 poles in series) [kA rms] | - | 50 | 100 | 50 | 100 |
| | 600 V DC (3 poles in series) [kA rms] | - | 35 | 65 | 35 | 65 |
| Trip units | TMF | • | • | | - | |
| | TMD/TMA | - | • | | • | |
| | Electronic | • | • | | • | |
| Dimensions | H [in/mm] | 5.12/130 | 8.07/205 | | 8.07/205 | |
| | W 3p [in/mm] | 3.54/90 | 4.13/105 | | 5.51/140 | |
| | D [in/mm] | 2.76/70 | 4.07/103.5 | | 4.07/103.5 | |
| Mechanical life | [No.operations] | 25000 | 20000 | | 20000 | |

# Table of contents
# Tmax accessories information

**Electrical and mechanical accessories**

# Tmax molded case circuit breakers
# Electrical and mechanical accessories

## Versions and types

Starting from the fixed version with front terminals, the Tmax circuit breakers can be converted into the various versions (plug-in for T2, T3, Ts3, T4 and T5; draw out for Ts3, T4, T5, T6 and T7), using the conversion kits. This makes management of the product, its versions and stock very flexible. In any case, it is always possible to request the circuit breaker in the desired version completely preset in the factory, by ordering, on the same line, the fixed circuit breaker and the conversion kit, to which must be added the cradle.
T7 is available in two different versions: the toggle version similar to the other sizes in the Tmax family, and the new motorizable version.

### Fixed

The Tmax FIXED three-pole or four-pole version circuit breakers offer:
- circuit breakers characterized by just two depths up to 1000 A: 70 mm for Tmax T1, T2 and T3 and 103.5 mm for Tmax Ts3, T4, T5 and T6. For T7 the depth varies according to the type of operating mechanism (with toggle or spring charging motor)
- standard circuit breakers fronts: 45 mm for Tmax T1, T2 and T3 and 105 mm for Ts3, T4 and T5, 140 mm for T6 and 280 mm for T7
- flange for compartment door
- possibility of assembly on back plate (or on DIN rail with T1, T2, T3 and Ts3, with the help of a special accessory,.
- thermomagnetic (on Tmax T1, T2, T3, Ts3, T4, T5 and T6) or electronic (on Tmax T2, T4, T5, T6 and T7) trip units
- standard FC Cu type terminals (front for copper cables) for T1 and F type (front) on all the Tmax family sizes.

### Plug-in

The PLUG-IN version of the circuit breaker (Tmax T2, T3, Ts3, T4 and T5) consists of:
- cradle to be installed directly on the back plate of the unit
- moving part obtained from the fixed circuit breaker with addition of the isolating contacts (near the connection terminals), of the rear frame (for fixing to the cradle) and of the terminal covers.

The circuit breaker is racked out by unscrewing the top and bottom fixing screws. A special lock prevents circuit breaker racking in and racking out with the contacts in the closed position.
In case the circuit breaker has electrical accessories mounted (SOR, UVR, MOS, MOE, MOE-E, AUX , AUX-E, AUE, RC222), the socket-plug connectors or the adapters for isolation of the relative auxiliary circuits must also be ordered.

### Draw out

The circuit breakers in the DRAW OUT version (Tmax Ts3, T4, T5, T6 and T7) are made up of:
- cradle to be installed directly on the back plate of the unit fitted with lateral guides to allow the moving part racking-in and racking-out operation to be carried out easily, and a dedicated flange for the compartment door to replace the one provided with the circuit breaker in the fixed version;
- moving part obtained from the fixed circuit breaker with addition of the relative conversion kit from fixed to draw out moving part;
- mandatory accessory to be applied onto the front of the circuit breaker selected between front for lever operating mechanism (standard supply for circuit breakers fitted with accessories in the factory, excluding T7) motor operator and rotary handle operating mechanism. Application of one of these accessories allows the racking-in and racking-out of the moving part with the compartment door closed (on T7 no accessory is required to have racking-out with the door closed).

## Draw out (continued)

Racking-in and racking-out of the moving part is carried out the special operating lever supplied with the cradle. This particular device allows the circuit breaker to be placed in the isolated position (with power and auxiliary circuits disconnected) with the compartment door closed, to the great advantage of operator safety. The handle can only be inserted with the circuit breaker open. Once removed or racked-out, the circuit breaker can be operated in open/closed and, by means of special connection extensions, blank tests can be carried out of the auxiliary control circuit functions.
The T4, T5 and T6 circuit breakers in the draw out version can only be fitted with pre-wired electrical accessories, provided with the appropriate ADP adapters for isolation of the relative auxiliary circuits.

## Stored Energy

The stored energy T7 and T8 circuit breaker can be equipped with the spring charging motor. To allow a complete remote control with T7 and T8 motorizable, the circuit breaker must be fitted with:
– shunt trip;
– closing coil;
– spring charging motor.

## Versions available

| Breaker type | F Fixed | P Plug-in | W Draw out |
|---|---|---|---|
| T1 | • | - | - |
| T2 | • | • | - |
| T3 | • | • | - |
| Ts3 | • | • | • |
| T4 | • | • | • |
| T5 | • | • | • |
| T6 | • | - | • |
| T7 | • | - | • |
| T7M | • | - | • |
| T8 | • | - | - |

## Cradle – FP (UL FILE: E116596)

The cradle, available for all the sizes of the Tmax family starting from T2, allows the circuit breaker to be made in the plug-in or draw out version. Different positions of the circuit breaker are possible:
– plug-in: connected, removed;
– draw out: connected, removed, racked-out for test (only for T7), racked-out.
In the standard version, the cradles of T2 and T3 are available with front terminals (F). A distinctive characteristic is the possibility of fitting these cradles with the same terminal, terminal cover and phase separator kits used for the fixed circuit breakers. With Tmax Ts3, T4, T5, T6 and T7, cradles with dedicated front and rear terminals are available. Moreover, the cradles of Ts3, T4 and T5 with front terminals can also be fitted with the special ES, FC Cu and FC CuAl terminals.
The rear flat terminals of the cradles of Tmax T7 are orientated (horizontally or vertically). Factory assembly is horizontal as standard. It is possible to ask for the cradle with vertical terminals. This extra code can be associated either with the top or bottom terminals (if asking for assembly of both the terminals vertically, the extra code must be repeated twice). The anti-racking-in locks, to be mounted on the left side of the cradle, and which prevent racking-in of incorrect moving parts are supplied as standard fitting of the cradles of Tmax T7. In detail, it is possible to define the different ways of combination between the cradle and the moving part according to: T7 with lever or which can be motorized, breaking capacity and rated uninterrupted current.

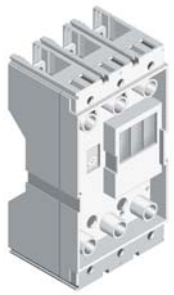

# Tmax molded case circuit breakers
## Electrical and mechanical accessories

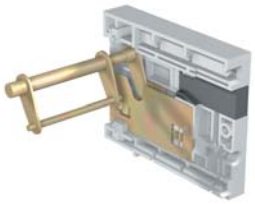

### Kit for conversion of plug-in cradle to draw out cradle (UL FILE: E116596)

For Tmax Ts3, T4 and T5 a conversion kit is available which is made up of a guide to prepare the plug-in cradle of the circuit breaker to the draw out cradle of the circuit breaker, a racking-out crank handle and by the flange for the compartment door to replace the one supplied with the fixed or plug-in circuit breaker version.

### Racking-out crank handle

This allows racking-out and racking-in of the draw out circuit breaker into the cradle, with the door closed. The crank handle is the same for the whole range of circuit breakers and is automatically supplied with the cradle of draw out circuit breakers or with the conversion kit for plug-in cradles to draw out cradles.

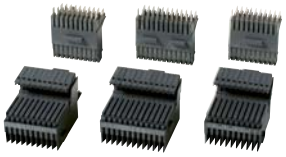

### Sliding contacts blocks

The sliding contact blocks are required for Tmax T7 in the draw out version equipped with electrical accessories or with an electronic trip unit. Their function is to realize the electrical connections of the secondary circuits between the mobile part and the cradle and these blocks work in pairs: one block is to be mounted on the mobile part and the other one on the cradle. The following table combines the types of sliding contact blocks and the electrical accessories.

| Left block | Central block | Right block |
|---|---|---|
| Spring charging motor | PR331 | Auxiliary contacts (Q or SY) |
| Sping charged contact (AUX-SC) | PR332 | Shunt trip |
| Ready to close contact (AUX-RTC) | - | Closing coil |
| Early auxiliary contacts (AUE) | - | Under voltage release |
| Contact for signalling trip coil release trip (AUX-SA) | - | - |
| Trip reset | - | - |

If at least one of the electrical accessories listed in the previous table is fitted on the circuit breaker the respective pair of blocks must be mounted on the mobile part and on the cradle.

T2-T3

### Kit for conversion into moving part of plug-in for T2 - T3 - Ts3 - T4 - T5 (UL FILE: E116596)

Allows the fixed circuit breaker with front terminals to be converted into the moving part of a plug-in circuit breaker. The kit consists of:
- isolating contacts
- anti-racking out safety device
- assembly screws and nuts
- low terminal covers for the moving part.

The cradle for plug-in version is necessary to complete the circuit breaker.

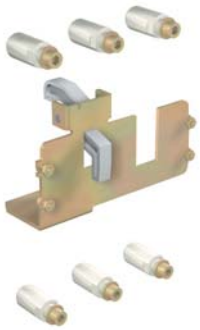

T4-T5

T4-T5-T6

T7

## Kit for conversion into moving part of draw out for Ts3 - T4 - T5 - T6 - T7 (UL FILE: E116596)

Allows the fixed circuit breaker with front terminals to be converted into the moving part of a draw out circuit breaker. The kit consists of:

- isolating contacts
- frame
- assembly screws and nuts
- low terminal covers for the moving part.

The circuit breakers in the draw out version must always be completed either with the front for lever operating mechanism (standard supply for circuit breakers fitted with accessories in the factory, excluding T7), rotary handle operating mechanism or motor operator.
The cradle for draw out version is necessary to complete the circuit breaker.

## Connection terminals

The basic version circuit breaker is supplied with:
- front terminals for copper cables (FC Cu), for the Tmax T1 circuit breaker
- front terminals (F), for all the other Tmax family sizes.

Different types of terminals, which can be combined in different ways, are also available (top of one type, bottom of a different type), thereby allowing the circuit breaker to be connected to the plant in the most suitable way in relation to installation requirements.
The following can be distinguished:
- **front terminals** which allow connection of cables or busbars working directly from the front of the circuit breaker
- **oriented rear terminals** which allow installation of the circuit breakers in switchboards with rear access to both the cable and busbar connections.

Terminals are available for direct connection of bare copper or aluminium cables and terminals for connection of busbars or cables with cable lugs.
On page 3/8 and following, the information needed to make the connections for each type of terminal is summarised. For connection with bare cables, the minimum and maximum cross-sections of the cables, which can be clamped in the terminals, the type of cables (rigid or flexible) and the diameter of the terminal are indicated. For connections with busbars, flat terminals of different sizes and composition are recommended.
The torque values to be applied to the terminal tightening screws for cables and to the screws used to connect the busbars to the flat terminals are indicated.
The circuit breakers can be ordered complete with the terminals required (mounted directly in the factory), by associating the terminal kit codes with the code of the standard version circuit breaker, or the terminals can be ordered individually in packs of 3 - 4 - 6 or 8 pieces.
To receive the circuit breaker with mixed terminals, the two terminal half-kits must be specified, loading the one to be mounted on top as the first half-kit and then the one to be mounted below.
If the top terminals are the same as the bottom ones, it is compulsory to order the complete kit (6 or 8 pieces) and not the two half-kits: the configuration would not be accepted by the system.

## Insulating terminal covers

The terminal covers are applied to the circuit breaker to prevent accidental contact with live parts and thereby guarantee protection against direct contacts. The following are available:
- low terminal covers (LTC): these guarantee IP40 degree of protection for fixed circuit breakers with rear terminals and for moving parts of plug-in and draw out circuit breakers
- high terminal covers (HTC): these guarantee IP40 degree of protection, for fixed circuit breakers with front, front extended, front for cables terminals.

With Tmax T2 and T3, the cradles of plug-in circuit breakers can use the same terminal covers as the corresponding fixed circuit breakers. For cradles of T4 and T5, the proper terminal covers (TC-FP) are available.
The degrees of protection indicated at page 1/8 are valid for the circuit breaker installed in a switchboard.

# Tmax molded case circuit breakers
## Electrical and mechanical accessories

### Phase separators

These allow increased insulation characteristics between the phases at the connections. They are mounted from the front, even with the circuit breaker already installed, inserting them into the corresponding slots and they are available in two versions:

- 3.94” (100 mm) high
- 7.87” (200 mm) high.

The H = 3.94” (100 mm) phase separators are supplied as obligatory with front extended type terminals (EF), whereas the ones with height 7.87” (200 mm) are obligatory with front extended spread type terminals (ES).
The phase separating partitions are incompatible with both the high and low insulating terminal covers; while with Ts3 circuit breakers, phase separating partitions are always supplied with low terminal covers.
The cradles can use the same phase separating partitions as the corresponding fixed circuit breakers.
With the phase separating partitions mounted, on request, with Tmax T1, T2 and T3 a special kit is available to reach IP40 degree of protection from the front of the circuit breaker.
It is possible to mount the phase separating partitions between two circuit breakers or cradles side by side.

### Screws for sealing the terminal covers

These are applied to the terminal covers of fixed circuit breakers or to the moving parts of plug-in or draw out circuit breakers. They prevent removal of both the high and low terminal covers and can be locked with a wire and lead seal.

### Kit for taking up the auxiliary power supply

Special kits are available with the fixed version of Tmax T2, T3, T4 and T5 circuit breakers for taking up the auxiliary power supply directly from the connection terminals. They can only be combined with the front terminals for copper cables (FC Cu) for T2, T3 and T4 or with the front terminals (F) for T4-T5.

# Tmax molded case circuit breakers
# Electrical and mechanical accessories

## Connection terminals (fixed circuit breaker)

| Breaker type | F | EF | ES | FC Cu | FC CuAl[1] | MC | RC CuAl | HR | VR | HR for RC221/222 | R |
|---|---|---|---|---|---|---|---|---|---|---|---|
| | 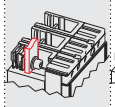 | 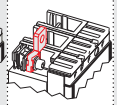 |  | 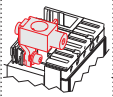 | 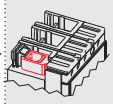 | 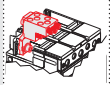 | 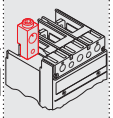 | 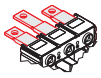 | 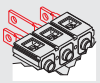 | 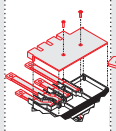 | 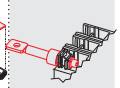 |
| | **Front terminals** | **Front extended terminals** | **Front extended spread terminals** | **Front terminals for copper cables** | **Front terminals for CuAl cables** | **Multi-cable terminals** | **Rear terminals for CuAl cables** | **Rear flat horizontal terminals** | **Rear flat vertical terminals** | **Rear flat horizontal terminals** | **Rear terminals** |
| T1 | - | F | - | F[2] | F | - | - | F | - | F | - |
| T2 | F[2] | F | F | F | F | - | - | - | - | - | F |
| T3 | F[2] | F | F | F | F | - | - | - | - | - | F |
| Ts3 | F[2] | F | F | F | F | - | F | - | - | - | F |
| T4 | F[2] | F | F | F | F | F | - | - | - | - | F |
| T5 | F[2] | F | F | F | F | - | - | - | - | - | F |
| T6 | F[2] | F | F | - | F | - | F | - | - | - | F |
| T7 | F[2] | F | F | - | F | - | - | F | F | - | F |
| T8 | F[2] | - | F | - | F | - | - | - | - | - | F |

[1] UL listed
[2] Standard supply
F = Fixed

## Connection terminals (cradle or plug-in base)

| Breaker type | F | EF | ES | FC Cu | FC CuAl[1] | R | RS | HR | VR | HR/VR | RC |
|---|---|---|---|---|---|---|---|---|---|---|---|
| | **Front terminals** | **Front extended terminals** | **Front extended spread terminals** | **Front terminals for copper cables** | **Front terminals for CuAl cables** | **Rear terminals** | **Rear spreaded terminals** | **Rear flat horizontal terminals** | **Rear flat vertical terminals** | **Rear flat terminals** | **Rear terminals for CuAl cables** |
| T2 | P[2] | P | P | P | P | P | - | - | - | - | - |
| T3 | P[2] | P | P | P | P | P | - | - | - | - | - |
| Ts3 | - | P-W | - | P-W[1] | - | - | - | - | - | P-W | - |
| T4 | - | P-W | - | P-W | P-W | - | - | P-W | P-W | - | - |
| T5 | - | P-W | P[3]-W[3] | P-W | P-W | - | - | P-W | P-W | - | - |
| T6 | - | W | - | - | - | - | - | W | W[1] | - | - |
| T7 | - | W | - | - | - | - | W | - | - | W | W[1] |

[1] UL listed
[2] Standard supply
[3] For T5 600 only
P = Plug-in
W = Draw out

# Tmax molded case circuit breakers
# Electrical and mechanical accessories

## Front terminals - F

Allow connection of busbars or cables with ring terminals

| Breaker type | Version | Pieces | Busbars/cable terminal [in-mm] | | | | Tightening [lbin-Nm] | Terminal covers | | | Phase separators |
|---|---|---|---|---|---|---|---|---|---|---|---|
| | | | W | H | D | Ø | | high | low | cradle | |
| T2 | F-P | 1 | 0.79-20 | 0.30-7.5 | 0.20-5 | 0.26-6.5 | 54-6 | R | R | – | R |
| T3 | F-P | 1 | 0.94-24 | 0.37-9.5 | 0.31-8 | 0.33-8.5 | 71-8 | R | R | – | R |
| Ts3 150 | F | 1 | 0.79-20 | 0.39-10 | 0.16-4 | 0.35-9 | 80-9 | R | R | – | R* |
| Ts3 225 | F | 1 | 0.79-20 | 0.39-10 | 0.24-6 | 0.35-9 | 80-9 | R | R | – | R* |
| T4 | F | 1 | 0.98-25 | 0.37-9.5 | 0.31-8 | 0.33-8.5 | 161-18 | R | R | – | R |
| T5 | F | 1 | 1.38-35 | 0.43-11 | 0.39-10[1] | 0.41-10.5 | 252-28 | R | R | – | R |
| T6 | F | 2 | 1.97-50 | 0.47-12 | 0.20-5 | 2x0.28-2x7 | 80-9 | R | R | – | R |
| T7 | F | 2 | 1.97-50 | 0.79-20 | 0.31-8 | 2x0.43-2x11 | 161-18 | – | R | – | R |
| T8 2000 | F | 3 | 3.94 - 100 | – | 0.2 - 5 | 4x 0.59 - 15 | 625 - 70 | – | R | – | R |
| T8 2500 | F | 4 | 3.94 - 100 | – | 0.2 - 5 | 4x 0.59 - 15 | 625 - 70 | – | R | – | R |

[1] minimum 0.19"-5 mm

## Front extended terminals - EF

Allow connection of busbars or cables with ring terminals

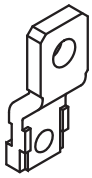

| Breaker type | Version | Pieces | Busbars [in-mm] | | | Cable terminal [in-mm] | | Tightening [lbin-Nm] | | Terminal covers | | | Phase separators |
|---|---|---|---|---|---|---|---|---|---|---|---|---|---|
| | | | W | D | Ø | W | Ø | A | B[1] | high | low | cradle | |
| T1 | F | 1 | 0.59-15 | 0.20-5 | 0.33-8.5 | 0.59-15 | 0.33-8.5 | 63-7 | 80-9 | R | – | – | S |
| T2 | F-P | 1 | 0.79-20 | 0.16-4 | 0.33-8.5 | 0.79-20 | 0.33-8.5 | 54-6 | 80-9 | R | – | – | S |
| T3 | F-P | 1 | 0.79-20 | 0.24-6 | 0.39-10 | 0.79-20 | 0.39-10 | 71-8 | 161-18 | R | – | – | S |
| Ts3 150 | F | 1 | 0.79-20 | 0.16-4 | 0.33-8.5 | 0.79-20 | 0.31-8 | 80-9 | 80-9 | R | R | R | R* |
| Ts3 225 | F-P-W | 1 | 0.79-20 | 0.24-6 | 0.33-8.5 | 0.79-20 | 0.33-8.5 | 80-9 | 80-9 | R | R | R | R* |
| T4 | F | 1 | 0.79-20 | 0.39-10 | 0.39-10 | 0.79-20 | 0.39-10 | 161-18 | 161-18 | R | – | – | S |
| | P-W | 1 | 0.79-20 | 0.39-10 | 0.31-8 | 0.79-20 | 0.31-8 | – | 80-9 | – | – | R | R |
| T5 | F | 2 | 1.18-30 | 0.28-7 | 0.43-11 | 1.18-30 | 0.43-11 | 252-28 | 161-18 | R | – | – | S |
| | P-W | 2 | 1.18-30 | 0.59-15 | 0.39-10 | 1.18-30 | 0.39-10 | – | 161-18 | – | – | R | R |
| T6 | F-W | 2 | 1.97-50 | 0.20-5 | 0.55-14 | 1.97-50 | 0.55-14 | 80-9 | 268-30 | – | R | R | R |
| T7 | F-W | 2 | 1.97-50 | 0.39-10 | 4x0.43-4x11[2] | – | – | 161-18[3] | 355-40[4] | – | R | – | S |

[1] class 4.8 screws (not supplied)
[2] only use two holes diagonally
[3] 12 Nm onto cradle of draw out circuit breaker
[4] class 8.8 screws (not supplied)

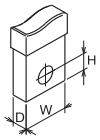


A = Tightening the terminal onto the circuit breaker
B = Tightening the cable/busbar onto the terminal
R = On request
R* = Are supplied with low terminal covers (which are, in turn, on request)
S = Standard
Pieces = Number of busbars, cables or cable terminals

# Tmax molded case circuit breakers
# Electrical and mechanical accessories

## Front extended spread terminals - ES

Allow connection of busbars or cables terminated with cable terminal

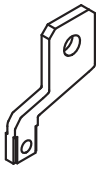

| Breaker type | Version | Pieces | Busbars [in-mm] | | | Cable terminal [in-mm] | | Tightening [Ibin-Nm] | | Terminal covers | | | Phase separators |
|---|---|---|---|---|---|---|---|---|---|---|---|---|---|
| | | | W | D | Ø | W | Ø | A | B[1] | high | low | cradle | |
| T2 | F-P | 1 | 1.18-30 | 0.16-4 | 0.41-10.5 | 1.18-30 | 0.41-10.5 | 54-6 | 161-18 | – | – | – | S |
| T3 | F-P | 1 | 1.18-30 | 0.16-4 | 0.41-10.5 | 1.18-30 | 0.41-10.5 | 71-8 | 161-18 | – | – | – | S |
| Ts3 | F | 1 | 1.18-30 | 0.16-4 | 0.33-8.5 | 1.18-30 | 0.33-8.5 | 80-9 | 80-9 | – | S | – | S* |
| T4 | F | 1 | 1.18-30 | 0.24-6 | 0.41-10.5 | 1.18-30 | 0.41-10.5 | 161-18 | 161-18 | – | – | – | S |
| T5 | F-P[2]-W[2] | 1 | 1.58-40 | 0.39-10 | 0.43-11 | 0.43-11 | 0.43-11 | 252-28 | 161-18 | – | – | – | S |
| T6 | F | 1 | 3.15-80 | 0.20-5 | 3x-0.51-3x13 | 3x1.77-3x45 | 0.51-13 | 80-9 | 268-30 | – | – | – | – |
| T7 | F | 2 | 1.97-50 | 0.39-10 | 3x-0.51-3x13 | 4x1.77-4x45 | 0.51-13 | 161-18 | 355-40 | – | – | – | S |
| T8 2000 | F | 6 | – | – | – | 1.73 - 44 | 0.67 - 17 | 365 - 40 | 365 - 40 | – | – | – | R |
| T8 2500 | F | 6 | – | – | – | 1.73 - 44 | 0.67 - 17 | 365 - 40 | 365 - 40 | – | – | – | R |

(1) class 4.8 screws (not supplied) (2) for T5 600 only

## Front terminals for copper cables - FC Cu

Allow connection of bare copper cables directly to the circuit breaker

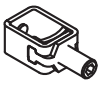

| Breaker type | Assembly | Version | Pieces | Cable [AWG or Kcmil-mm²] | | Flexible busbars | Tightening [Ibin - Nm] | | Ø [in-mm] | Terminal covers | | | Phase separators |
|---|---|---|---|---|---|---|---|---|---|---|---|---|---|
| | | | | rigid | flexible | W x S x N[2] | A | B | | high | low | cradle | |
| T1/T1 1p | standard | F | 1 | 2.5…70 | 2.5…50 | 9 x 0.8 x 6 | – | 63-7 | 0.47-12 | R | R | – | R |
| | standard | F | 2 | – | 2.5…35 | – | – | 63-7 | 0.47-12 | R | R | – | R |
| T2 | standard | F-P | 1 | 1…95 | 1…70 | 13 x 0.5 x 10 | – | 63-7 | 0.55-14 | R | R | R | R |
| | standard | F-P | 2 | – | 1…50 | – | – | 63-7 | 0.55-14 | R | R | R | R |
| T3 | standard | F-P | 1 | 6…185 | 6…150 | 15.5 x 0.8 x 10 | – | 89-10 | 0.71-18 | R | R | R | R |
| | standard | F-P | 2 | – | 6…70 | – | – | 89-10 | 0.71-18 | R | R | R | R |
| Ts3 | standard | F-P-W | 1 | 10...350-6...185 | – | – | – | 142-16 | 0.71-18 | R | R | S | R* |
| T4 | standard | F-P-W | 1 | 2.5…185 | 2.5…120 | 15.5 x 0.8 x 10 | – | 89-10 | 0.71-18 | R | R | S | R |
| | standard | F-P-W | 2 | – | 2.5…95 | – | – | 89-10 | 0.71-18 | R | R | S | R |
| T5 | standard | F-P-W | 1 | 16…300 | 16…240 | 24 x 1 x 10 | – | 222-25 | 1.10-28 | R | R | S | R |
| | standard | F-P-W | 2 | – | 16…150 | – | – | 222-25 | 1.10-28 | R | R | R | – |
| | external | F | 2 | 120…240 | – | – | 18 | 222-25 | – | S | – | – | – |

(1) UL Listed (2) W = width; S = thickness; N = n. of bars

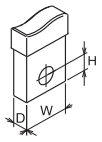


A = Tightening the terminal onto the circuit breaker
B = Tightening the cable/busbar onto the terminal
R = On request
S = Standard
R* = Are supplied with low terminal covers (which are, in turn, on request)
S* = Are supplied as standard with the low terminal covers
Pieces = Number of busbars, cables or cable terminals

## Front terminals for copper/aluminium cables - FC CuAl (UL listed)

Allow connection of bare copper or aluminium cables directly to the circuit breaker (solid aluminium cables cannot be used)

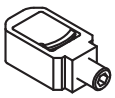

**T2-T5**
**Standard**

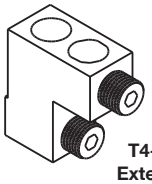

**T4-T5**
**External**

| Type | Assembly | Version | Pieces | Cable [AWG or Kcmil-mm²] | Tightening [lbin-Nm] | | Ø [in-mm] | Terminal covers | | | Phase separators |
|---|---|---|---|---|---|---|---|---|---|---|---|
| | | | | rigid | A | B | | high | low | cradle | |
| T1 1P/T1 | standard | F | 1 | 14…10-2.5…6 | 20-2.5 | – | 0.37-9.5 | R | R | – | R |
| | | | | 8.0-10 | 40-4.5 | – | – | – | – | – | – |
| | | | | 6…1/0-16…50 | 45-5 | – | – | – | – | – | – |
| T2 100 | standard | F-P | 1 | 14…1/0-2.5…50 | 80-9 | 50-5.6 | – | R | R | R | R |
| T3 100 | standard | F-P | 1 | 14…1/0-2.5…50 | 80-9 | 50-5.6 | 0.39-10 | R | R | R | R |
| T3 225 | standard | F-P | 1 | 4…300-25…150 | 80-9 | 200-22.6 | 0.67-17 | R | R | R | R |
| Ts3-D 150 (In=100) | standard | F | 1 | 14…1/0-2.5…50 | 80-9 | 50-5.6 | – | R | – | – | – |
| Ts3 150 | standard | F | 1 | 2…4/0-35…95 | 80-9 | 120-13.5 | 0.56-14.2 | R | – | – | – |
| Ts3 225 | standard | F | 1 | 4…300-25…150 | 80-9 | 276-31 | – | R | – | – | – |
| T4 250 | standard | F-P-W | 1 | 6…350-6…185 | 274-31 | 80-9 | 0.7-18 | R | R | S | R |
| T4 250 | standard | F | 1 | 14…1/0-2.5…50 | 50-5.6 | 80-9 | 0.39-9.9 | R | R | – | R |
| T5 400 | external | F | 2 | 3/0…250-95…120 | 274-31 | 159-18 | 0.61-15.5 | S | – | – | R |
| T5 400 | standard | F-P-W | 1 | 250…500-120…240 | 380-43 | 159-18 | 0.84-21.5 | R | R | S | R |
| T5 600 | external | F | 2 | 3/0…500-95…240 | 274-31 | 159-18 | 0.84-21.5 | S | – | – | R |
| T6 600 | standard | F | 2 | 250…500-120…240 | 44-5 | 276-31 | 0.87-22 | S | – | – | – |
| T6 800 | standard | F | 2 | 250…500-120…240 | 44-5 | 276-31 | 0.87-22 | S | – | – | – |
| T7 1200 | external | F | 4 | 2/0…500-70…240 | 160-18 | 380-43 | 0.84-21.5 | S | – | – | – |

# Tmax molded case circuit breakers
# Electrical and mechanical accessories

## Rear terminals - R

Allow connection of busbars or cable terminal at the rear. They can be installed in 4 different positions to facilitate connection to cable/busbars

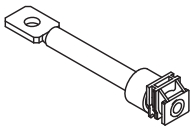

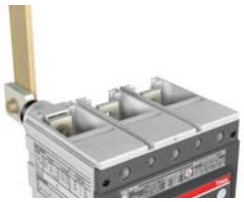

| Breaker type | Version | Pieces | Busbars [in-mm] | | | Tightening [lbin-Nm] | | Terminal covers | | Phase separators |
|---|---|---|---|---|---|---|---|---|---|---|
| | | | W | D | Ø | A | B[1] | high | low | |
| T2 | F-P | 1 | 0.79-20 | 0.16-4 | 0.33-8.5 | 54-6 | 80-9 | – | S | – |
| T3 | F-P | 1 | 0.79-20 | 0.24-6 | 0.33-8.5 | 54-6 | 80-9 | – | S | – |
| Ts3 150 | F | 1 | 0.79-20 | 0.16-4 | 0.49-12.5 | 89-10 | 179-20 | – | S | S* |
| | P-W | 1 | 0.79-20 | 0.16-4 | 0.49-12.5 | 89-10 | 179-20 | – | – | – |
| Ts3 225 | F | 1 | 0.79-20 | 0.24-6 | 0.49-12.5 | 89-10 | 179-20 | – | S | S* |
| | P-W | 1 | 0.79-20 | 0.24-6 | 0.49-12.5 | 89-10 | 179-20 | – | – | – |
| T4 | F | 1 | 0.79-20 | 0.39-10 | 0.33-8.5 | 54-6 | 80-9 | – | S | – |
| T5 | F | 2 | 1.18-30 | 0.28-7 | 0.43-11 | 161-18 | 161-18 | – | S | – |
| T6 | F | 2 | 1.97-50 | 0.20-5 | 0.55-14 | 161-18 | 268-30 | – | S | – |
| T7 | F | 2 | 1.97-50 | 0.31-8 | 2x0.43-2x11 | 179-20 | 355-40 | – | S | – |

[1] class 8.8 screws (not supplied)

## Rear vertical terminals - VR

These allow connection of busbars or cable terminals at the rear.
There are rear horizontal or vertical terminals.

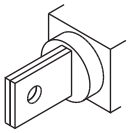

| Breaker type | Version | Pieces | Busbars / cable terminals [in-mm] | | | Tightening [lbin-Nm] | | Terminal covers | | | Phase separators |
|---|---|---|---|---|---|---|---|---|---|---|---|
| | | | W | D | Ø | A | B( | high | low | cradle | |
| T8 2000 | F | 3 | 3.94 - 100 | 0.2 - 5 | 4x 0.59 - 15 | 625 - 70 | 625 - 70 | - | - | - | R |
| T8 2500 | F | 4 | 3.94 - 100 | 0.2 - 5 | 4x 0.59 - 15 | 625 - 70 | 625 - 70 | - | - | - | R |
| T8 3000 | F | 4 | 3.94 - 100 | 0.2 - 5 | 4x 0.71 - 18 | 890 - 100 | 890 - 100 | - | - | - | R |

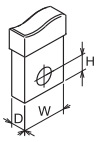


A = Tightening the terminal onto the circuit breaker
B = Tightening the cable/busbar onto the terminal
R = On request
S = Standard
S* = Are supplied as standard with the low terminal covers
Pieces = Number of busbars, cables or cable terminals

## Rear flat horizontal and vertical terminals for cradles - HR/VR

These allow connection of busbars or cable terminals at the rear.
There are rear horizontal or vertical terminals.

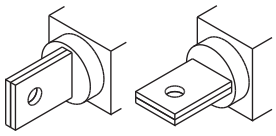

| Breaker type | Version | Pieces | Busbars [in-mm] | | | Cable terminal [in-mm] | | Tightening [Ibin-Nm] | | Terminal covers | | | Phase separators |
|---|---|---|---|---|---|---|---|---|---|---|---|---|---|
| | | | W | D | Ø | W | Ø | A | B[1] | high | low | cradle | |
| T4 | P - W | 1 | 0.79-20 | 0.39-10 | 0.39-10 | 0.79-20 | 0.39-10 | – | 159-18 | – | – | – | – |
| T5 400 | P - W | 1 | 0.98-25 | 0.39-10 | 0.47-12 | 0.98-25 | 0.47-12 | – | 159-18 | – | – | – | – |
| T5 600 | P - W | 2 | 1.57-40 | 0.59-15 | 0.43-11 | 1.57-40 | 0.43-11 | – | 159-18 | – | – | – | – |
| T6 | W | 2 | 1.97-50 | 0.20-5 | 0.55-14 | 1.97-50 | 0.55-14 | – | 268-30 | – | – | – | – |
| T7 | W | 2 | 1.97-50 | 0.39-10 | 2x0.43-2x11 | – | – | 106-12 | 355-40 | – | – | – | – |

[1] class 4.8 screws (not supplied)

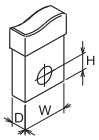


A = Tightening the terminal onto the circuit breaker
B = Tightening the cable/busbar onto the terminal
R = On request
S = Standard
S* = Are supplied as standard with the low terminal covers
Pieces = Number of busbars, cables or cable terminals

# Tmax molded case circuit breakers
# Electrical and mechanical accessories

## Service releases

The Tmax family of circuit breakers can be fitted with service releases (shunt trip, closing coil and undervoltage release). These are available in the pre-cabled version, depending on the size of the circuit breaker fitted with 39.4” (1 m) long free cables, with a connector with 39.4” (1 m) cables or with a simple pin connector and two terminals to be mounted in the terminal board.
Assembly is carried out for all the releases by pressing into the special seat in the left part of the circuit breaker (right for T7 and T8) and fixing with the screw provided.
The releases are interchangeable for T1, T2, T3, Ts3 (both for the three-pole and four-pole version), whereas for T4, T5 and T6 in the four-pole version the shunt trip (not possible with PS-SOR) and the undervoltage release can be housed at the same time, as long as they are in the wired version and the shunt trip is necessarily mounted in the slot of the third pole. T4, T5, T6 circuit breakers in the draw out version can only be equipped with pre-cabled accessories; the T4-T5-T6 circuit breakers complete with motorized controls can only be fitted with prewired undervoltage and shunt trips.
The T7 and T8 circuit breakers allows simultaneous mounting of all three service releases. These two possibilities are available on the three-pole version as well. Moreover Tmax T7 and T8 can be equipped with two shunt trips instead of the undervoltage release to facilitate some specific applications where a very high safety level of the remote circuit breaker opening command is required.

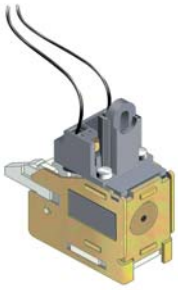

T1-T2-T3

T4-T5-T6

T7

## Shunt trip – SOR (UL FILE: E116596)

Allows circuit breaker opening by means of an electric command. Operation of the trip is provided for a voltage between 70% and 110% of the rated power supply voltage value Un, both in alternating current and in direct current. For Tmax T1, T2, T3, T4, T5 and T6, the SOR shunt trip is fitted with a limit contact for cutting off the power supply in the open position and with the release tripped.

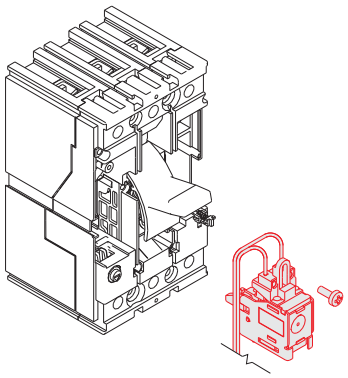

T1-T2-T3

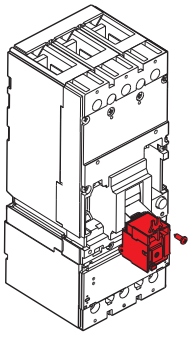

Ts3

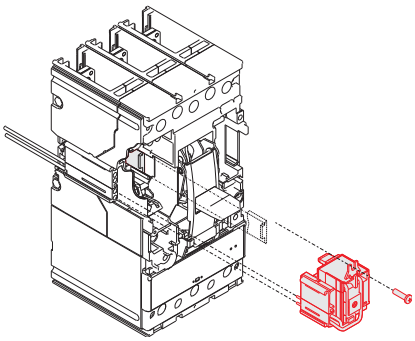

T4-T5-T6

## Shunt trip - SOR - Electrical characteristics

| Control voltage | Inrush power consumption | | | | | | | | | |
|---|---|---|---|---|---|---|---|---|---|---|
| | Tmax T1, T2, T3 | | Tmax Ts3 | | Tmax T4, T5, T6 | | Tmax T7 | | Tmax T8 | |
| | AC [VA] | DC [W] | AC [VA] | DC [W] | AC [VA] | DC [W] | AC [VA] | DC [W] | AC [VA] | DC [W] |
| 12 V DC | - | 50 | - | 120 | - | 150 | - | - | - | - |
| 24 V AC/DC | - | - | 100 | 100 or 4[1] | - | - | 300 | 300 | - | 200 |
| 24…30 V AC/DC | 50 | 50 | - | - | 150 | 150 | - | - | - | - |
| 30 V AC/DC | - | - | - | - | - | - | 300 | 300 | 200 | 200 |
| 48 V AC/DC | - | - | - | 120 | - | - | 300 | 300 | 200 | 200 |
| 48…60 V AC/DC | 60 | 60 | - | - | 150 | 150 | - | - | - | - |
| 60 V AC/DC | - | - | - | - | - | - | 300 | 300 | 200 | 200 |
| 110…120 V AC/DC | - | - | 100 or 4[1] | - | - | - | 300 | 300 | 200 | 200 |
| 120…127 V AC/DC | - | - | - | - | - | - | 300 | 300 | 200 | 200 |
| 110…127 V AC-110…125 V DC | 50 | 50 | - | 120 | 150 | 150 | - | - | 200 | 200 |
| 220…240 V AC/DC | - | - | - | - | - | - | 300 | 300 | 200 | 200 |
| 220…240 V AC-220…250 V DC | 50 | 50 | 100 | 120 | 150 | 150 | - | - | - | - |
| 240…250 V AC/DC | - | - | - | - | - | - | 300 | 300 | 200 | 200 |
| 380…400 V AC | - | - | - | - | - | - | 300 | - | 200 | - |
| 380…440 V AC | 55 | - | - | - | 150 | - | - | - | - | - |
| 415…440 V AC | - | - | - | - | - | - | 300 | - | 200 | - |
| 480 V AC | - | - | 100 | - | - | - | - | - | - | - |
| 480…525 V AC | 55 | - | - | - | 150 | - | - | - | - | - |
| Opening times [ms] | 15 | 15 | ≤ 15 | ≤ 15 | 15 | 15 | 20 | 20 | 60 | 60 |

[1] Shunt trip of permanent supply

## Shunt trip with permanent service – PS-SOR

Furthermore, for T4, T5 and T6, opening coils with permanent service (PS-SOR) are available, with much lower power consumption and which can be supplied continuously: in this case, in fact, they are not fitted with auxiliary limit contact. The pre-cabled or uncabled version can be chosen for these coils as well.

## Shunt trip - PS-SOR - Electrical characteristics

| Control voltage | Tmax T4, T5, T6 | |
|---|---|---|
| | AC [VA] | DC [W] |
| 24 V AC/DC | 4 | 4 |
| 110…120 V AC | 4 | – |

# Tmax molded case circuit breakers
# Electrical and mechanical accessories

SCR - T7

## Closing coil – SCR

The closing coil - only available on the motorizable versions of Tmax T7 and T8 - allows remote closure of the circuit breaker when the circuit breaker closing springs are charged. The technical characteristics and the service voltages of the closing coil are identical to those of the shunt trip available on T7 and T8. The closing time of the circuit breaker by means of SCR is 80 ms.

## Undervoltage release – UVR (UL FILE: E116596)

The undervoltage release opens the circuit breaker due to lack of release power supply voltage or due to values under 0.7 x Un with a trip range from 0.7 to 0.35 x Un. After tripping, the circuit breaker can be closed again with a voltage higher than 0.85 x Un. With the undervoltage release de-energised, it is not possible to close the circuit breaker or the main contacts.

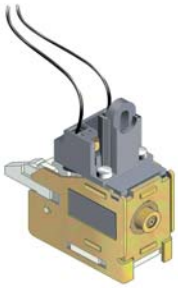

UVR - T1-T2-T3

UVR - T4-T5-T6

UVR - T7

## UVR - Electrical characteristics

| Control voltage | Power consumption during permanent operation | | | | | | | | | |
|---|---|---|---|---|---|---|---|---|---|---|
| | Tmax T1, T2, T3 | | Tmax Ts3 | | Tmax T4, T5, T6 | | Tmax T7 | | Tmax T8 | |
| | AC [VA] | DC [W] | AC [VA] | DC [W] | AC [VA] | DC [W] | AC [VA] | DC [W] | AC [VA] | DC [W] |
| 24 V AC/DC | - | - | 6 | 3 | - | - | 3.5 | 3.5 | - | 5 |
| 24…30 V AC/DC | 1.5 | 1.5 | - | - | 6 | 3 | - | - | - | - |
| 30 V AC/DC | - | - | - | - | - | - | 3.5 | 3.5 | 5 | 5 |
| 48 V AC/DC | 1 | 1 | 6 | 3 | 6 | 3 | - | - | 5 | 5 |
| 60 V AC/DC | 1 | 1 | - | - | 6 | 3 | - | - | 5 | 5 |
| 110…120 V AC/DC | - | - | 6 | - | - | - | 3.5 | 3.5 | 5 | 5 |
| 120…127 V AC/DC | - | - | - | - | - | - | 3.5 | 3.5 | 5 | 5 |
| 110…127 V AC-110…125 V DC | 2 | 2 | - | - | 6 | 3 | - | - | - | - |
| 220…240 V AC/DC | - | - | - | - | - | - | 3.5 | 3.5 | 5 | 5 |
| 220…240 V AC-220…250 V DC | 2.5 | 2.5 | - | 3 | 6 | 3 | - | - | - | - |
| 220…250 V AC | - | - | 6 | - | - | - | - | - | - | - |
| 240…250 V AC/DC | - | - | - | - | - | - | 3.5 | 3.5 | 5 | 5 |
| 380…400 V AC | - | - | - | - | - | - | 3.5 | - | 5 | - |
| 380…440 V AC | 3 | - | - | - | 6 | - | - | - | - | - |
| 415…440 V AC | - | - | - | - | - | - | 3.5 | - | 5 | - |
| 480 V AC | - | - | 6 | - | - | - | - | - | - | - |
| 480…525 V AC | 4 | - | - | - | 6 | - | - | - | - | - |
| **Opening times [ms]** | 15 | 15 | ≤ 18 | ≤ 18 | ≤ 25 | ≤ 25 | ≤ 25 | ≤ 25 | 30 | 30 |

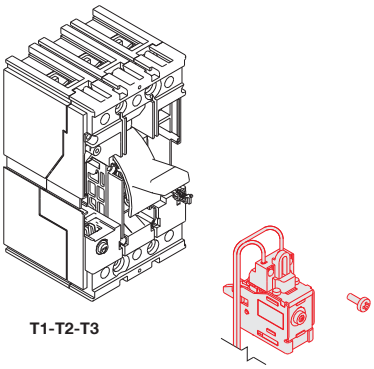

T1-T2-T3

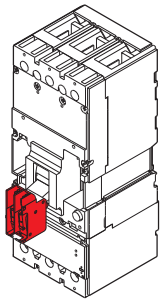

Ts3

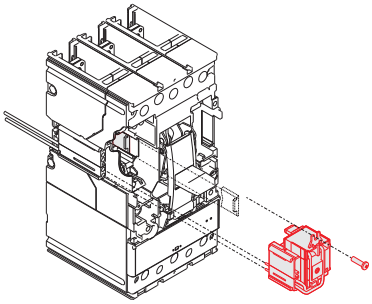

T4-T5-T6

## Connectors for service releases (only for Ts3)

These allow the shunt trip or undervoltage release to be connected to the power supply circuit. They are available in the following versions:

– for fixed circuit breakers
– for plug-in/draw out circuit breakers.

Assembly is by means of pressure into special slots in the left side of the circuit breaker.
Cables of different lengths (UL/CSA) are available.
Socket-plugs with 3, 6 or 12 poles and cable kit (UL/CSA) with a length of 78.8” (2 m) are available for Tmax: the socket-plugs are necessary only for plug-in version.

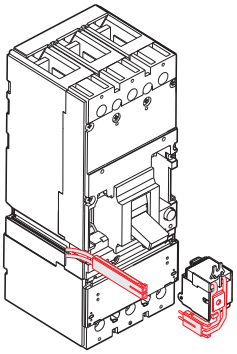

**KTs3C-SU**

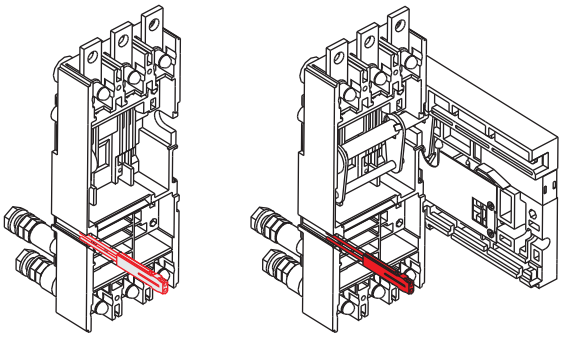

**KTs3C-SUP**

# Tmax molded case circuit breakers
# Electrical and mechanical accessories

## Electrical signals

These allow information on the operating state of the circuit breaker to be real outside.
Installation of these accessories is carried out directly from the front of the circuit breaker in special slots placed on the right-hand side of the circuit breaker, completely segregated from the live parts - all to the benefit of user safety. The auxiliary contacts can be supplied (depending on the type) either with cabling directly on the circuit breaker terminal board or in the pre-cabled version, depending on the size of the circuit breaker fitted with free cables 39.4” (1 m) long, with a connector with 39.4” (1 m) long cables. The pre-cabled version is mandatory on the T4, T5 and T6 circuit breakers in the draw out version. The auxiliary contacts for T7 are always fitted with three terminals to be mounted in the terminal board to carry out the cabling. The auxiliary contacts are available for use both in direct and alternating current at various voltages. The signals are reset when the circuit breaker is reset.

**AUX-C - 250 V AC/DC**

### T1-T8 (AUX)

Available both in the pre-cabled and uncabled version, auxiliary contacts supply the following electrical signalling:
- Form C (open/closed): indicates the position of the circuit breaker contacts (Q)
- Bell alarm: signals circuit breaker opening due to overcurrent release trip (for overload or short circuit), trip of the residual current release, of the opening coil or of the undervoltage release, of the emergency opening pushbutton of the motor operator or two to operation of the test pushbutton (SY)
- Contact for signalling electronic trip unit tripped: signals intervention of one of the protection functions of the electronic trip unit (S51) (except for Ts3).

The auxiliary contacts for T7 and T8 are always fitted with terminals to be mounted in the terminal box to carry out wiring.

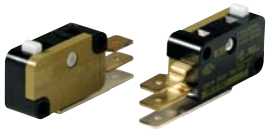

**T7**

### T4, T5, T6, T7 and T8 with electronic trip units (AUX-SA)

There is a contact for signalling electronic trip units tripped, only available in the pre-cabled version for use at 250 V AC.

### T4, T5 and T6 (AUX-MO)

This auxiliary contact, only in the uncabled version, must be combined with the motor operator and indicates the motor operation mode (manual or remote).

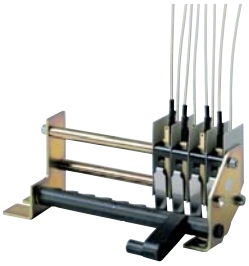

**T8**

### T7 (AUX-RTC)

The “circuit breaker ready to close” auxiliary contact is available with wiring directly on the terminal box of the stored energy T7 circuit breaker and signals that the circuit breaker is ready to accept a closing command if there are the following five conditions:
- circuit breaker open
- closing springs charged
- any opening coil de-energised
- any undervoltage coil energised
- opening solenoid armed.

### T7 (AUX-SC)

Remotely indicates the state of the circuit breaker operating mechanism is closing springs (supplied only with the spring charging motor).

## T4, T5 and T6 with PR222DS/PD-A and electronic trip unit (AUX-E)

Only available in the pre-cabled version, the auxiliary contacts AUX-E (also called electronic version contacts) communicate the state of the circuit breaker to the electronic trip unit and make an open/closed signal available to the outside and another one for electronic trip unit tripped.
They can only be combined with the PR222DS/PD-A electronic trip unit and only function when there is a 24 V DC auxiliary power supply to the trip unit for the communication functions.
The AUX-E contacts can, moreover, be directly connected to the MOE-E motor operator.
The “traditional” version of the auxiliary contacts can also be combined with the protection trip units with dialogue; in this case, only electrical signalling of the state of the circuit breaker will be provided and it will not be possible to communicate remotely or control the motor.

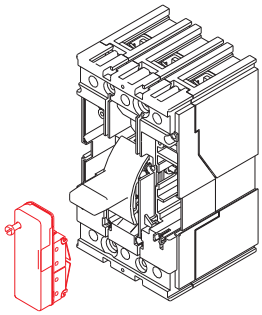

**AUX-C**

## AUX - Electrical characteristics

### AUX 250 V - T1...T6

| Power supply voltage | Service current Category of utilisation (IEC 60947-5-1) | |
|---|---|---|
| | AC 14 | DC 13 |
| 125 V | 6 A | 0.3 A |
| 250 V | 5 A | 0.15 A |

Protection with gG 10x38 type fuse (Imax 6 A)

### AUX 400 V - Ts3

| Power supply voltage | | Breaking capacity |
|---|---|---|
| AC (50-60) [V] | DC [V] | Ohmic Load [A] |
| | 125 | 0.3 |
| | 250 | 0.15 |
| 250 | | 6 |
| 400 | | 3 |

### AUX 400 V - T4...T7

| Power supply voltage | Service current In [A] | |
|---|---|---|
| | AC | DC |
| 125 V | – | 0.5 |
| 250 V | 12[1] | 0.3 |
| 400 V | 3 | – |

[1] 5 A for Tmax T7

### AUX 24 V - T1...T7

| Power supply voltage | Service current In [A] | |
|---|---|---|
| | AC | DC |
| 24 V | – | ≥ 0.75 mA |
| 5 V | – | ≥ 1 mA |

### AUX-E - T4...T6

| | |
|---|---|
| Typical contact | Mosfet |
| Vmax | 350 V DC/230 V AC |
| Imax | 50 mA AC/DC |
| Pmax (resistive load) | 17 W, 11 VA |
| System contact/ground insulation | 2000 V AC (1 min. @ 50 Hz) |
| Contact/contact insulation | 400 V DC |

## Table of the possible combinations of the T7-T7M auxiliary contacts

| | | | | | |
|---|---|---|---|---|---|
| T7 | BA | C | | | KT7AS |
| | | | C | C | KT7XAS2 |
| | BA | C | C | C | KT7AS + KT7XAS2 |

| | | | | | |
|---|---|---|---|---|---|
| T7M | | | C | C | KT7XAS2 |
| | C | C | | | KT7XAS2 |
| | C | C | C | C | KT7XAS2 + KT7XAS2 |

# Tmax molded case circuit breakers
# Electrical and mechanical accessories

## Types of auxiliary contacts

| Type and control voltage | | T1 | T2 TMD | T2 PR221 | T3 | Ts3 | T4 | T5 | T6 | T7 | T8 |
|---|---|---|---|---|---|---|---|---|---|---|---|
| AUX 250 V AC/DC | 1 open/closed changeover contact + 1 bell alarm changeover contact | • | • | - | • | - | • | • | • | - | - |
| AUX 250 V AC/DC | 3 open/closed changeover contacts + 1 bell alarm changeover contact | • | • | - | • | - | • | • | • | - | - |
| AUX 250 V AC/DC | 1 SA electronic release trip contact + 1 open/closed changeover contact + 1 bell alarm changeover contact | - | - | • | - | - | - | - | - | - | - |
| AUX 250 V AC/DC | 2 open/closed changeover contacts + 1 bell alarm changeover contact | - | - | • | - | - | - | - | - | - | - |
| AUX 400 V AC | 1 open/closed changeover contact + 1 bell alarm changeover contact | - | - | - | - | - | • | • | • | • | - |
| AUX 400 V AC | 2 open/closed changeover contacts | - | - | - | - | • | • | • | • | • | - |
| AUX 400 V AC | 1 open/closed changeover contact + 1 bell alarm | - | - | - | - | • | - | - | - | - | - |
| AUX 400 V AC | 4 open/closed changeover contacts for PR232 and PR331 trip units | - | - | - | - | - | - | - | - | - | • |
| AUX 400 V AC | 4 open/closed changeover contacts for PR332 trip unit | - | - | - | - | - | - | - | - | - | •(1) |
| AUX 24 V DC | 1 open/closed changeover contact + 1 bell alarm changeover contact | - | - | - | - | - | - | - | - | • | - |
| AUX 24 V DC | 2 open/closed changeover contacts | - | - | - | - | - | - | - | - | | - |
| AUX 24 V DC | 3 open/closed changeover contacts + 1 bell alarm changeover contact | • | • | - | • | - | • | • | • | - | - |
| AUX 24 V DC | 4 open/closed changeover contacts for PR232 and PR331 trip units low voltage | - | - | - | - | - | - | - | - | - | • |
| AUX 24 V DC | 4 open/closed changeover contacts for PR332 trip units low voltage | - | - | - | - | - | - | - | - | - | • |
| AUX-SA 250 V AC | 1 SA electronic release trip contact | - | - | - | - | - | • | • | • | • | • |
| AUX-SAR 250 V AC | 1 SA electronic release trip contact with remote reset | - | - | - | - | - | - | - | - | - | • |
| AUX-MO | 1 contact signalling manual/remote | - | - | - | - | - | • | • | • | - | - |
| AUX-RTC 24 V DC | 1 contact signalling ready to close | - | - | - | - | - | - | - | - | • | - |
| AUX-RTC 250 V AC/DC | 1 contact signalling ready to close | - | - | - | - | - | - | - | - | • | - |
| AUX-SC 24 V DC | 1 contact signalling closing springs charged | - | - | - | - | - | - | - | - | • | - |
| AUX-SC 250 V AC/DC | 1 contact signalling closing springs charged | - | - | - | - | - | - | - | - | • | - |
| AUX-E | 1 open/closed contact + 1 bell alarm contact (only with PR222DS/PD-A) | - | - | - | - | - | • | • | • | - | - |
| AUX-YU1 | Normally close contact signalling undervoltage de-energized | - | - | - | - | - | - | - | - | - | • |
| AUX-YU2 | Normally open contact signalling undervoltage de-energized | - | - | - | - | - | - | - | - | - | • |

(1) 4 contacts always supplied with T8 equipped with PR332 trip units

## Connectors for auxiliary contacts (only for Ts3)

These allow the auxiliary contacts to be connected to the relative power supply circuit.
For Ts3 circuit breakers, the auxiliary contacts (fitted with plug connector) can only be supplied by means of the specific connectors to be ordered specifying the size and version of the circuit breaker (fixed or plug-in/draw out).
Assembly is carried out by mounting into special slots on the right side of the circuit breaker.
Socket-plugs with 3, 6 or 12 poles and cable kit (UL/CSA) with a length of 78.8” (2 m) are available.

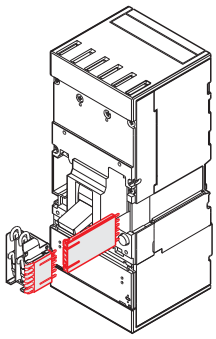

**KTs3C-AB**

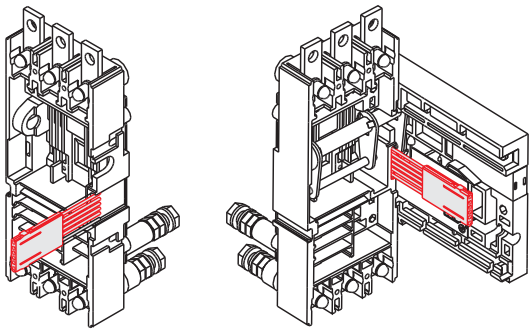

**KTs3C-ABP**

## Early auxiliary contacts – AUE

Early auxiliary contacts are normally open contacts, advanced in relation to closing (2 contacts for all the sizes, except for T7 where there are 3). They allow the undervoltage release to be supplied in advance, in relation to closing of the main contacts, in compliance with the IEC 60204-1 and VDE 0113 Standards. They are mounted inside the direct and transmitted rotary handle operating mechanism, whereas on T7 with the electric operating mechanism they are mounted directly on the circuit breaker. The early contacts are only supplied in the cabled version with 39.4” (1 m) long cables, complete with socket-plugs with 6 poles for T1, T2 and T3 or with socket-plug connectors with 39.4” (1 m) cables for T4, T5 and T6. It is necessary to bear in mind that once the connectors for T4, T5 and T6, are inserted in the special slot on the right-hand side of the circuit breaker they extend further out than the outline of the circuit breaker itself. For Ts3 the contact is supplied complete with double slide socket connectors for simultaneous connection of the undervoltage release and of the consent contact itself. The early auxiliary contacts for T7 are always fitted with 3 terminals to be mounted in the terminal board to carry out the cabling.

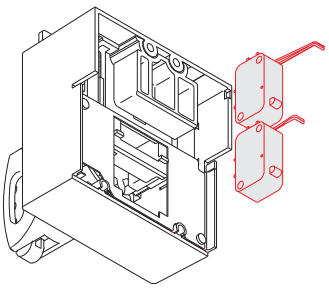

T7

## Auxiliary position contacts – AUP

Auxiliary position contacts which provide electrical signalling of the circuit breaker position in relation to the cradle are available. The following auxiliary position contacts are available:

### T2 - T3

– contacts signalling circuit breaker is racked-in.

### Ts3

– contacts signaling circuit breakers is racked-in
– contacts signaling circuit breakers is drawn-out.

### T4 - T5 - T6

– circuit breaker racked-in signalling contacts for plug-in and draw out versions
– circuit breaker racked-out signalling contacts only for draw out version
– circuit breaker racked-in signalling contacts for plug-in and draw out versions 24 V DC
– circuit breaker racked-out signalling contacts only for draw out version 24 V DC.

### T7

– contacts for signalling circuit breaker is racked-in
– contacts for signalling circuit breaker is isolated-test
– contacts for signalling circuit breaker is racked-out.

A maximum of three contacts can be installed on the cradle of T2, T3, T4 and T5, a maximum of two contacts for Ts3, whereas up to five auxiliary contacts can be mounted on the cradle of T6 in all the combinations (for T4 and T5, in the draw out version, only one contact for signalling circuit breaker racked-out can be housed in the compartment closest to the bottom terminals).
The auxiliary contacts for T7 are inserted in a single block consisting of two contacts for signalling racked-in, two for isolated-test and two for racked-out.

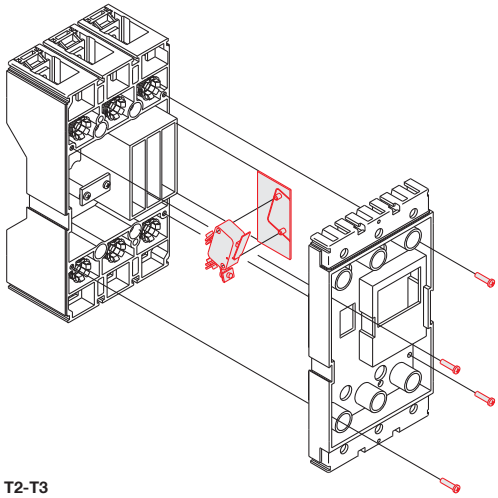

T2-T3

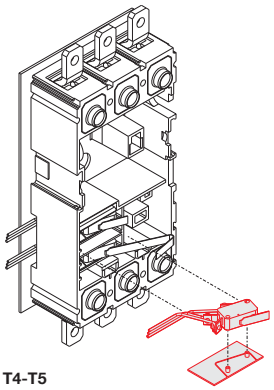

T4-T5

# Tmax molded case circuit breakers
## Electrical and mechanical accessories

### Trip reset

Available on the motorized T7 and T8, the trip reset is a coil which allows remote circuit breaker resetting following a trip of the overcurrent releases. It is available with two power supply voltages: 24...30 V AC/DC, 110...130 V AC/DC and 200...240 V AC/DC.


### Mechanical operation counter

Available on the motorized T7 and T8, it is connected to the operating mechanism by means of a simple lever mechanism. It indicates the number of circuit breaker mechanical operations. The indication is visible from the outside on the front of the circuit breaker.

## Remote control

Remote opening and closing on Tmax circuit breaker is now possible. By means of electrical signal, the opening and closing is done either through a solenoid operator (T1, T2 and T3), a direct motor operator (Ts3) or a stored energy motor operator (T4, T5 and T6). On Tmax T7 motorized version and T8, the opening and closing command are done through coils (YO - YC) along with the spring charging motor. In order to get a complete electrically operated T7M or T8, all three of the above parts mentionned are required.

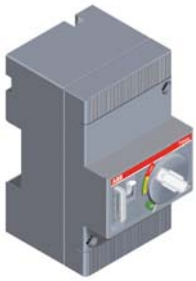

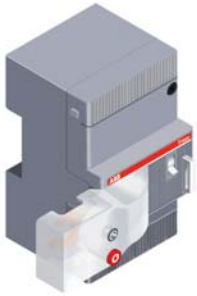

## Solenoid operator for T1, T2 and T3 – MOS (UL FILE: E116596)

The solenoid operator allows remote circuit breaker opening and closing control and is particularly recommended for use in electric network supervision and control systems. A selector allows switching from automatic to manual operation and a block is also available (supplied as standard) for the operating mode of the motor. It is always provided with a padlock in the open position which prevents any additional commands, either locally or remotely. It operates both circuit breaker opening and closing, working directly on the circuit breaker lever.
It is offered in two versions, the first is “side-by-side” with the circuit breaker for T1 and T2, for installation on a panel or DIN EN 50022 rail. The other on the “front” for T1, T2 and T3, suitable for installation directly on the front of the circuit breaker.
The latter is complete with an operating handle. The front version can also be used with plug-in circuit breakers.
Coupling with the residual current release is only allowed for a circuit breaker with a side-by-side solenoid operator, to allow access to the user interface of the residual current release from the front of the switchgear. In fact, using the solenoid operator superimposed would imply the circuit breaker position on the rear of the door and its residual current release and the interface would no longer be accessible. This combination can only be installed directly on the back plate of the switchgear. Both versions can be used either in the three-pole or four-pole version. The solenoid operator is supplied complete with 1m long cables and, just for the superimposed version, with a socket-plug connector with 5 poles.
Both the opening and closing commands are operated by the solenoid which acts directly on the circuit breaker lever.
The main parameters relative to the solenoid operator are indicated in the table.

| Electrical details | | |
|---|---|---|
| AC | [V] | 110…250 |
| DC | [V] | 48…60 / 110…250 |
| Operating voltage limits | [% Un] | 85…110% Un |
| Inrush power consumption during operation | | 1800 [VA] / 1000 [W] |
| Power on stand-by | | < 100 [mW] |
| Opening duration | [s] | < 0.1 |
| Closing duration | [s] | < 0.1 |
| Mechanical life | [no. Operations] | 25000 |
| | [no. Operations/h] | 240 (T1 and T2); 120 (T3) |
| Degree of protection, on the front | | IP30 |
| Minimum control impulse time on opening and closing | [ms] | >100 |

The unit is permanently supplied on stand-by, a control is applied by means of an external contact (relay, opto-insulator) in a low power circuit.
Contact characteristics: V AC/DC = 24 V
I AC/DC = 50 mA

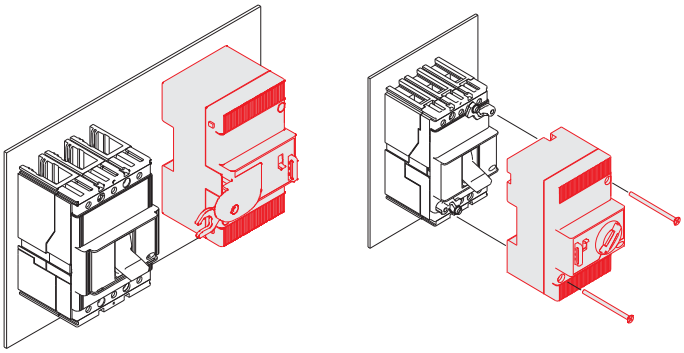

## Direct action motor operator for Ts3 (UL file: E116596)

Both the opening and closing command is controlled by the motor, which acts directly on the circuit breaker lever. The table shows the power supply voltage values Un [V].

## Motor operator Ts3

| Electrical details | | AC | DC |
|---|---|---|---|
| Rated voltage, Un | [V] | - | 24 |
| | [V] | - | 48…60 |
| | [V] | 120 | 125 |
| | [V] | 240 | 250 |
| | [V] | 440 | - |
| Operating voltage limits | [% Un] | 85…110% Un | 85…110% Un |
| Inrush power absorption Ps | | 500 [VA] | 500 [W] |
| Service power absorption Pc | | 350 [VA] | 350 [W] |
| Operating frequency | [Hz] | 50-60 | 50-60 |
| Time constant | [ms] | 18 | 18 |
| Opening duration | [s] | 0.1 | 0.1 |
| Closing duration | [s] | 0.1 | 0.1 |
| Mechanical life | [no. operations] | 15000 (S3-S4) - 10000 (S5) | 15000 (S3-S4) - 10000 (S5) |
| Degree of protection, on the front | | IP30 | IP30 |
| Minimum duration of the opening and closing command impulse | [ms] | ≥ 150 | ≥ 150 |

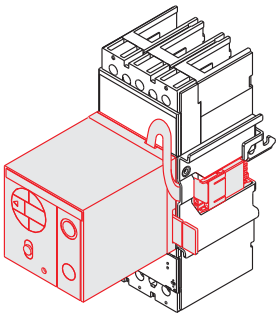

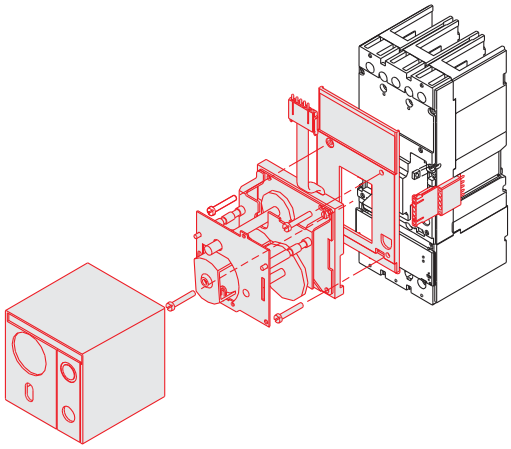

## Connectors for motor operators (only for Ts3)

The motor operators for Ts3 can only be supplied by means of the specific connectors. They are of the slide type and allow simultaneous connection of both the motor operator and the auxiliary contacts to the relative power supply circuit. They are an alternative to the corresponding connectors for the auxiliary contacts because they are housed in the same seat. They must be ordered specifying the size and version of the circuit breaker (fixed or plug-in/draw out).

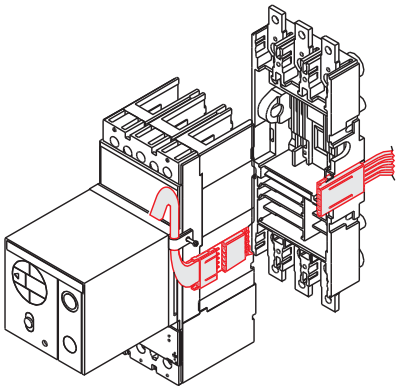

## Stored energy motor operator for T4, T5 and T6 – MOE and MOE-E (UL FILE: E116596)

With the stored energy motor operator, it is possible to control both opening and closing of the circuit breaker on which it is installed. During opening of the circuit breaker, the spring system is recharged automatically: the stored energy is exploited in this way to close the circuit breaker.
The motor operator is always supplied with socket-plug connectors with 39.4" (1 m) long cables and is always fitted with a padlock in the open position, which prevents any command, either locally or remotely. The connectors, once inserted in the special slot on the left-hand side of the circuit breaker, extend out of the outline of the circuit breaker itself and are only compatible with pre-wired electrical accessories. A selector allows passage from automatic to manual operation and a block is also available (supplied as standard) for the operating mode of the motor.
The motor operator can be fitted both with a key lock in the open position (with the same MOL-S keys for groups of circuit breakers or different MOL-D keys) and with an MOL-M key lock against manual operation: in the former case, the lock in the open position is both of electrical and mechanical type, in the latter case, only of mechanical type, i.e. only closing from the front of the circuit breaker (remote closing is allowed). In the case of interlocked circuit breakers, for safety reasons the key lock against manual operation is required.
The motor operator is always fitted with a contact to signal "auto" or "manual" (not on changeover). On request, it can also be fitted with an AUX-MO auxiliary contact (on changeover), which provides a signal of its state of service: "auto" (remote control of the circuit breaker) or "manual".
If the circuit breaker is fitted with the PR222DS/PD-A electronic trip unit, instead of the MOE motor operator, it is possible to use the MOE-E motor operator: for its use, the circuit breaker must also be fitted with the AUX-E auxiliary contacts (standard supply with MOE-E). The MOE-E allows use of the digital signals coming from the supervision and control system, by means of the PR222DS/PD-A and the AUX-E contacts, and to convert these into power signals to operate the motor operator. All the characteristics indicated above for the MOE motor operator are also valid for the MOE-E.
The main parameters relative to the stored energy motor operator are indicated in the table.

## MOE and MOE-E

| Electrical details | | Tmax T4-T5 | | Tmax T6 | |
|---|---|---|---|---|---|
| | | AC [V] | DC [V] | AC [V] | DC [V] |
| Rated voltage, Un | [V] | – | 24 | – | 24 |
| | [V] | – | 48…60 | – | 48…60 |
| | [V] | 110…125 | 110…125 | 110…125 | 110…125 |
| | [V] | 220…250 | 220…250 | 220…250 | 220…250 |
| | [V] | 380 | – | 380 | – |
| Operating voltage | [% Un] | 85…110 | 85…110 | 85…110 | 85…110 |
| Power consumption on inrush Ps | | ≤ 300 VA | ≤ 300 W | ≤ 400 VA | ≤ 400 W |
| Power consumption in service Pc | | ≤ 150 VA | ≤ 150 W | ≤ 150 VA | ≤ 150 W |
| Opening duration | [s] | 1.5 | 1.5 | 3 | 3 |
| Closing duration | [s] | < 0.1 | < 0.1 | < 0.1 | < 0.1 |
| Resetting duration | [s] | 3 | 3 | 5 | 5 |
| Mechanical life | [no. Operations] | 20000 | 20000 | 10000 | 10000 |
| Degree of protection, on the front | | IP30 | IP30 | IP30 | IP30 |
| Minimum control impulse time on opening and closing | [ms] | ≥100 | ≥100 | ≥100 | ≥100 |

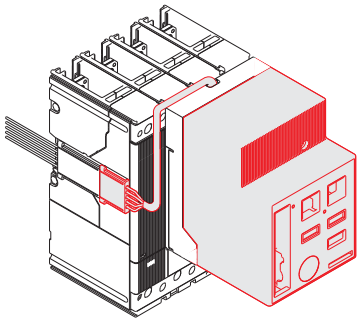

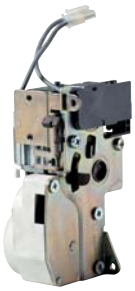

T7M

T8

## Spring charging motor for T7 and T8

Only available on Tmax T7M and T8 in the stored energy version, the spring charging motor automatically charges the circuit breaker operating mechanism springs. This operation is carried out automatically immediately after closure of the circuit breaker.
When there is no power supply or during maintenance work, the closing springs can, in any case, be charged manually by means of the special operating mechanism lever. It is always fitted with limit contact.
The spring charging motor is always fitted with a terminal to be mounted in the terminal board to carry out the cabling.

## Spring charging motor

| Electrical details | | Tmax T7M | | Tmax T8 | |
|---|---|---|---|---|---|
| | | AC [V] | DC [V] | AC [V] | DC [V] |
| Rated voltage, Un | [V] | 24…30 | 24…30 | 24…30 | 24…30 |
| | [V] | 48…60 | 48…60 | 48…60 | 48…60 |
| | [V] | 100…130 | 100…130 | 100…130 | 100…130 |
| | [V] | 220…250 | 220…250 | 220…250 | 220…250 |
| | [V] | 380...415 | - | - | - |
| Opering voltage | [% Un] | 85…110 | 85…110 | 85…110 | 85…110 |
| Power consumption | | ≤ 100 VA | ≤ 100 W | 500 VA | 500 W |
| Charging time | [s] | 8 - 10 | 8 - 10 | 4 - 5 | 4 - 5 |

**Note**: To allow a complete remote control with T7M and T8, the circuit breaker must be fitted with:
– shunt trip;
– closing coil;
– spring charging motor.

## Adapters – ADP

For the SOR, PS-SOR, UVR, AUX, MOE or MOE-E and AUE pre-wired electrical accessories used with Tmax T4, T5 and T6 in the plug-in or draw out versions, it is necessary to use the adapters to be coupled with the plug, which will then be connected to the socket on the cradle. According to the electrical accessories required, one or two adapters must be mounted on the left and/or right side of the moving part.
There are four adapter types available:
- 5-way adapters
- 6-way adapters
- 10-way adapters
- 12-way adapters.

The table below indicates the adapters which have to be used for the various possible combinations of electrical accessories:

## Adapters ADP for T4, T5 and T6 wired accessories

| Device type | 5- way | 6- way | 10- way | 12- way |
|---|---|---|---|---|
| SOR | • | - | - | - |
| UVR | • | - | - | - |
| MOE (MOE-E) | - | - | • | - |
| MOE (MOE-E) + SOR or UVR | - | - | • | - |
| AUE | - | - | • | - |
| AUE + SOR or UVR | - | - | • | - |
| AUX 1Q + 1SY 1 open/closed changeover contact + 1 trip unit tripped changeover contact | - | • | - | - |
| AUX 2Q 2 open/closed changeover contacts | - | • | - | - |
| AUX 3Q + 1SY 3 open/closed changeover contacts + 1 trip unit tripped changeover contact | - | - | - | • |

On the other hand, for Tmax T2 and T3 in the plug-in version it is necessary, to order the socket-plug connectors: with 12 poles for the AUX auxiliary contacts - 3 open/closed changeover + 1 release tripped changeover, with 6 poles for the AUX auxiliary contacts -1 open/closed changeover + 1 release tripped changeover and with 3 poles for the service releases (SOR or UVR).
For T2 in the plug-in version with PR221 electronic trip unit and suitable auxiliary contact, it is necessary to order a 6 and a 3 pole socket-plug connector.

## Socket plug connectors

In order to allow the racking-in and racking-out operations of the moving part of the plug-in circuit breaker, the wired and unwired electrical accessories of Tmax T2 and T3 and the unwired electrical accessories of Tmax T4, T5 and T6 must be fitted with one or more socket plug connectors, as per the table below.

## Socket plug connectors

| Device type / Breaker type | 3 poles | 6 poles | 12 poles |
|---|---|---|---|
| **T2-T3-T4-T5-T6** | - | - | - |
| SOR | • | - | - |
| UVR | • | - | - |
| AUX 1Q +1SY 1 open/closed changeover contact + 1 trip unit tripped changeover contact | - | • | - |
| AUX 2Q 2 open/closed changeover contacts | - | • | - |
| AUX 3Q + 1SY 3 open/closed changeover contacts + 1 trip unit tripped changeover contact | - | - | • |
| **T2-T3** | - | - | - |
| MOS overload[1] | - | • | - |
| AUE | • | - | - |
| AUX 2Q + 1SY for PR221 2 open/closed contacts + 1 trip unit tripped changeover contact | • | • | - |
| AUX 1S51 + 1Q + 1SY for PR221 1 changeover contact + 1 SA electronic release trip contact + 1 trip unit tripped changeover contact | • | • | - |

[1] Always provided with the overlaid solenoid operator

## Operating mechanism and locks

Operating mechanism are often used to switch a breaker on or off using an external device such as a rotary handle or a flange handle. Locks are used to prevent any closing or opening of the circuit breaker by means of key locks or padlock provision. Operating mechanisms are available for Tmax T1 up to T7 and locks are available for T1 up to T8.

## Rotary handle operating mechanism – RHD/RHE (UL FILE: E116596)

Thanks to its ergonomic grip, the rotary handle facilitates the circuit breaker closing and opening operations. It is always fitted with a padlock-lock in the open position which prevents circuit breaker closing. The opening in the padlock-lock can take up to 3 padlocks - Ø 0.27” (7 mm) stem (not supplied), 0.24” (6 mm) only for Ts3 (not supplied). It is always (except for Ts3) fitted with a compartment door lock and on request it can be supplied with a key lock in the open position. On request, the Ts3 can be supplied with a compartment door lock or key lock in the open position. Application of the rotary handle operating mechanism is an alternative to the motor operator and to the front interlocking plate (MIF) for T1, T2 and T3, or to the motor operator and to the front for lever operating mechanism for Ts3, T4, T5 and T6. The rotary handle operating mechanism is available in either the direct mount or variable depth version on the compartment door. The rotary handle operating mechanism in the emergency version, complete with a red on yellow background handle, suitable for controlling machine tools, is available in both the versions. The rotary handle operating mechanism is available on T7 with lever operating mechanism and, only for the direct mount version, is characterised by an articulated grip which allows the switchgear door to be opened in case of an emergency with the circuit breaker closed. The release settings and nameplate data remain accessible to the user.
The variable depth rotary handle operating mechanisms can be ordered by building up the following three devices:

- rotary handle on the compartment door
- shaft (19.68”/500 mm)
- base for circuit breaker or, alternatively, by using the code of the ready-configured version.

## Type of RH_ operating mechanism

| Device type | | T1 | T2, T3 | | Ts3 | | | T4, T5 | | | T6 | | T7[1] | |
|---|---|---|---|---|---|---|---|---|---|---|---|---|---|---|
| | | F | F | P | F | P | W | F | P | W | F | W | F | W |
| RHD | Direct mounted | • | • | • | • | • | • | • | • | • | • | • | • | • |
| RHD_EM | Emergency direct | • | • | • | • | • | • | • | • | • | • | • | • | • |
| RHE | Transmitted with adjustable distance | • | • | • | • | • | • | • | • | • | • | • | • | • |
| RHE_EM | Emergency transmitted with adjustable distance | • | • | • | • | • | - | • | • | • | • | • | • | • |
| RHE_B | Base for circuit breaker | • | • | • | - | - | - | • | • | • | • | • | • | • |
| RHE_S | Shaft for variable depth handle | • | • | • | • | • | - | • | • | • | • | • | • | • |
| RHE_H | Handle for transmitted RH with variable depth | • | • | • | - | - | - | • | • | • | • | • | • | • |
| RHE_H_EM | Emergency handle for transmitted RH with variable depth | • | • | • | - | - | - | • | • | • | • | • | • | • |

[1] The rotary handle operating mechanism is only available for T7 with lever operating mechanism and it is as an alterative to the key lock mounted on the circuit breaker.

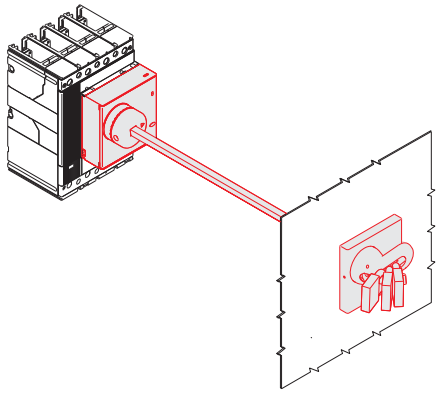

# Tmax molded case circuit breakers
## Electrical and mechanical accessories

### Cable operated flange handle T1 -T5

Cable operated flange handles are now available for Tmax T1-T5. Available with 2 handle types and 7different cable lenghts for a maximum flexibility. A complete kit is necessary. The kit is composed as 1 handle, 1 cable and 1 operating mechanism. Located on the side of the enclosure, this flange handle will open or close the circuit breaker with the help of the cable and the mechanism. The handle is available as NEMA 1, 3R, 12 grey painted and also as NEMA 4, 4X nickel coated.

### The IP54 protection for rotary handle (UL FILE: E116596)

Allows IP54 degree of protection to be obtained.
It is available for the transmitted rotary handle operating mechanism on the compartment door (RHE) for all the Tmax circuit breakers.

### Front for lever operating mechanism – FLD (UL FILE: E116596)

This can be installed on fixed, plug-in or draw out Tmax Ts3, T4, T5 and T6 circuit breakers. In the case of draw out circuit breakers, installed in a switchboard, it allows the IP40 degree of protection to be maintained for the whole isolation run of the circuit breaker.
It is always fitted with a padlock in the open position Ø 0.24” (6 mm) stem up to three padlocks (not supplied) which prevents closing of the circuit breaker and of the compartment door, and with compartment door lock. On request, it can be fitted with a key lock in the open position.
It is available in the following versions:
- for fixed or plug-in circuit breaker
- for draw out circuit breaker.

The front for lever operating mechanism is always an alternative to the motor operator and to the rotary handle and to the display FDU.
The same flange for the compartment door already supplied with the circuit breaker or the one supplied with the conversion kit for draw out (except for Ts3) version can be used.

T1-T3

### Padlock for operating lever – PLL

This is applied to the T1 - T2 - T3 circuit breaker cover to prevent the lever closing or opening operation. It allows installation up to a maximum of three padlocks Ø 0.24” (7 mm) stem (not supplied). It is available in the following versions:
- plug-in locking device only of the closing operation
- locking plate on the closing and opening operation according to the assembly position. The lock on the opening operation does not prevent release of the mechanism following a fault or remote control command
- locking plate just for the closing operation.

It is incompatible with the front accessories: solenoid operator, rotary handle operating mechanism and mechanic interlock.
The padlock is also available for T7 and it is directly mounted on the circuit breaker cover.

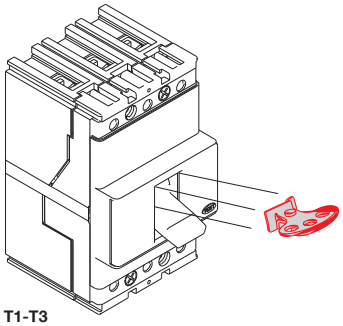

T1-T3

## Key lock on the circuit breaker for T1, T2, T3 and T7, T8 – KLC

This allows the mechanical closing operation of the circuit breaker to be locked and is installed directly on the front in the slot in correspondence with the left pole. This cannot be installed when the front operating mechanism, rotary handle operating mechanism or stored energy motor operator are present, or on the three-pole circuit breakers equipped with service releases (UVR, SOR). The key lock is the Ronis 622 type and is available in two versions:

– standard type, with key only removable with the circuit breaker locked
– special type, with key removable in both positions.

On T7 and T8, the key lock in the open position is mounted directly on the circuit breaker cover both in the version with different keys and with the same keys. Presettings for Ronis and Profalux key locks are also available.

## Key lock for rotary handle operating mechanism for T1, T2 and T3 – RHL

This allows the mechanical closing operation of the circuit breaker to be locked.
The following versions are available:

– lock with a different key for each circuit breaker
– lock with the same key for groups of circuit breakers.

The circuit breaker in the open position ensures isolation of the circuit in accordance to the IEC 60947-2 Standard. It is also available in the version which allows the lock both in the open and closed position. The lock in the closed position does not prevent release of the mechanism following a fault or remote control.

## Key lock for Ts3, T4, T5, T6 and T7, T8 – KLF-D and KLF-S

This allows mechanical operation of the circuit breaker to be locked. This lock can be used with the direct or transmitted rotary handle operating mechanism mounted on the base for circuit breaker or with the front for lever operating mechanism.
The lock of the circuit breaker in the open position ensures isolation of the circuit in accordance with the IEC 60947-2 Standard. For Ts3 different locks are supplied for the direct action motor operator, for stored energy motor operator, for rotary handle or front for lever operating mechanism. For T4, T5, T6 and T7 in the lever operating mechanism version key locks in the open position are available either with different keys (KLF-D) or with the same keys (KLF-S): in this case, up to four different key numbering codes are available (n. 2005-2006-2007-2008).

## Lock in the racked-out position for cradle (Ts3, T4, T5 and T6)

For Ts3, T4, T5 and T6 draw out circuit breakers, key or padlocks locks are available to be applied onto the rail of the cradle, to prevent racking-in of the plug-in part.
Selection can be made among the following:

– key lock with different keys (KLF-D FP)
– key lock with the same keys for groups of circuit breakers (KLF-S FP)
– Ronis type key lock (KLF-D Ronis FP)
– padlock, which can take up to three padlocks with Ø 0.24” (6 mm) stem, not supplied (PLL FP).

# Tmax molded case circuit breakers
# Electrical and mechanical accessories

## Lock in racked-in – isolated – racked-out position for cradle of T7

This device allows the moving part of a draw out T7 circuit breaker to be locked in the racked-in, isolated-test or racked-out position in the relative cradle. Thanks to mounting an additional accessory, the lock can be limited just to the racked-out position.
The cradle can be equipped with 1 or 2 of these key locks.

## Mechanical lock of compartment door

A mechanical lock of compartment door available on Ts3 and T7 for both the lever operating mechanism and for the motorizable version. It does not allow the compartment door to be opened with the circuit breaker closed (and circuit breaker racked-in for circuit breakers in the draw out version) and locks the circuit breaker closing with the compartment door open.
For Ts3 circuit breakers, it consists of two elements: one applied to the rotary handle operating mechanism or to the front for the lever operating mechanism, the other consisting of a metal striker to be applied onto the compartment door.
For T7 two versions are available: a door lock made by means of cables and a second type fixed directly on the side of the circuit breaker or of the relative cradle. The cable door lock must also be fitted with the interlock cable kit and the interlocking plate corresponding to the combined circuit breaker.

## Sealable thermal adjustment lock

This is applied to the circuit breaker cover near the thermal element regulator of the TMD thermomagnetic trip unit for T1, T2, T3 and Ts3 and prevents it being tampered with.

## Overview of the available locks

| Lock type | T1 | T2 | T3 | Ts3 | T4 | T5 | T6 | T7 | T8 |
|---|---|---|---|---|---|---|---|---|---|
| FDL Front for lever operating mechanism | - | - | - | • | • | • | • | - | - |
| PLL_ Padlock for operating lever | • | • | • | - | - | - | - | • | - |
| KLC_ Key lock on the circuit breaker | • | • | • | - | - | - | - | • | • |
| RHL Keylock for rotary handle operating mechanism | • | • | • | - | - | - | - | - | - |
| KLF-D and KLF-S Key lock for front for lever and rotary handle | - | - | - | • | • | • | • | - | - |
| MOL-D and MOL-S_ Key lock in open position for MOE and MOE_E | - | - | - | - | • | • | • | - | - |
| MOL-M_ Key lock against manual operation for MOE and MOE_E | - | - | - | - | • | • | • | - | - |
| KLF-FP and PLL FP_ Locks in open position for cradle | - | - | - | - | • | • | • | • | • |
| Mechanical lock on compartment door | - | - | - | • | - | - | - | • | - |
| Sealable lock of thermal adjustment | • | • | • | • | - | - | - | - | - |

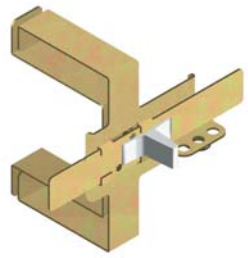

T1-T2-T3

## Mechanical interlock (UL FILE: E116596)

### T1-T2-T3

The mechanical MIF interlock can be applied on the front of two T1, T2 or T3 circuit breakers mounted side by side, in either the three-pole or four-pole fixed version and prevents simultaneous closing of the two circuit breakers. Fixing is carried out directly on the back plate of the switchboard. The front interlocking plate allows installation of a padlock in order to fix the position (possibility of locking in the O-O position as well). It is also possible to interlock three circuit breakers side by side, using the proper plate, thereby making the following interlock combinations: IOO-OIOOOI-OOO. It is incompatible with the front accessories (solenoid operator, rotary handle operating mechanism) and with the residual current releases.

T3-T4-T5-T6

### T3

For T3, in the three-pole or four-pole fixed or plug-in version, the MIR mechanical interlock is available. This rear interlock, available in the horizontal (MIR-H) and vertical (MIR-V) version, is compatible with all the front accessories and with the residual current release (only MIR-H).
The following interlocking combinations can be made: IO-OI-OO.

### Ts3

For Ts3 circuit breakers the (rear) mechanical interlock allows installation of two circuit breakers in a single support and, by means of a walking beam mechanism, makes them mechanically interdependent. It prevents operation in parallel of two power supply sources (eg. normal-emergency). It consists of a kit with levers and assembly accessories and a metallic support. The mechanical interlock is available in the version for side-by-side circuit breakers and for superimposed circuit breakers. Only circuit breakers of the same size and in the same version can be interlocked.

### T4-T5-T6

The mechanical interlock for T4, T5 and T6 allows installation of two circuit breakers on a single support and, by means of special lever mechanisms, makes them mechanically interdependent.
For Tmax T4 and T5 this is a rear interlock consisting of a vertical or horizontal frame group (MIR-HR or MIR-VR) and of a pair of metal plates for fixing the circuit breakers (MIR-P). The frame group is made up of metal frame and of the lever mechanism interlock. The metal plates are of different type according to the sizes of the circuit breakers to be interlocked.
For Tmax T6 this is a rear interlock consisting of a vertical or horizontal support.

## Possible interlock combinations

| Type | Breaker 1 | + | Breaker 2 |
|---|---|---|---|
| A | T4 (F-P-W) | + | T4 (F-P-W) |
| B | T4 (F-P-W) | + | T5 400 (F-P-W) o T5 630 (F) |
| C | T4 (F-P-W) | + | T5 630 (P-W) |
| D | T5 400 (F-P-W) o T5 630 (F) | + | T5 400 (F-P-W) o T5 630 (F) |
| E | T5 400 (F-P-W) o T5 630 (F) | + | T5 630 (P-W) |
| F | T5 630 (P-W) | + | T5 630 (P-W) |

There are no limitations on the versions to be interlocked, therefore, for example, a fixed circuit breaker can be interlocked with a draw out version switch-disconnector.
Since this is a rear interlock, all the front accessories which are compatible with the circuit breakers can be used.
In the vertical interlock the bottom terminals of the upper circuit breaker and the top terminals of the lower circuit breaker must be of rear type.

# Tmax molded case circuit breakers
## Electrical and mechanical accessories

### T7

This mechanism makes the mechanical interlock between two T7 circuit breakers by means of flexible cables, which are connected on a plate mounted on the side of the circuit breaker preventing simultaneous closing of the two circuit breakers. The plates to be mounted on the circuit breaker differ according to whether the circuit breaker is in the fixed or draw out version.
The interlock is available both for the manual operating mechanism version and for the motor operator one.

### Transparent pushbutton protection – TCP

A transparent protection for the circuit breaker opening and closing pushbuttons is available in two different versions on T7 and T8 with stored energy operating mechanism: one which protects both the pushbuttons and the other which alternatively protects either the opening or the closing pushbutton.
There is the possibility of putting a padlock, which adds the lock function to the protection. In the closed position this lock does not prevent release of the mechanism following a fault or a remote command.

### IP54 door protection

Available with T7 motorizable and T8, it is made by means of a transparent plastic cover which completely protects the front of the circuit breaker and allows IP54 degree of protection to be reached. Mounted on hinges, it is provided with a key lock.

# Tmax molded case circuit breakers
## Electrical and mechanical accessories


### Front display unit – FDU

The front display is a display unit of the setting currents, alarms and parameters of the PR222DS/P and PR222DS/PD-A electronic trip units of T4, T5 and T6. The display unit can operate correctly with self-supply with I ≥ 0.35 x In on at least one phase.
If the display is used in combination with the PR222DS/PD-A trip unit, and therefore with an auxiliary power supply, it is also possible to detect the protection which has caused the release trip and the fault current.
It is not compatible with the front accessories: rotary handle operating mechanism, motor operator and front for lever operating mechanism.

### HMI030 interface on the front of switchgear

This accessory, which can be used with all the protection trip units fitted with dialogue, is designed for installation on the front of the switchgear. It consists of a graphic display where all the trip unit measurements and alarms/events are displayed. The user can navigate in a simple and intuitive way among the measurements by using the navigation pushbuttons. The device can replace the traditional multimeters without the need for current/voltage transformers. The HMI030 is connected directly to the protection trip unit by means of a serial line and requires a 24 V DC power supply.

### Optional modules

The PR332/P trip unit for T7 and T8 can be enriched with additional internal modules, thereby increasing the capacity of the trip units and making these units highly versatile.


### PR330/V voltage measuring module

This optional internal module can be added to PR332/P. It measures and processes the phase and neutral voltages, transferring this data to the protection trip unit so that a series of protection and measurement functions can be implemented.
It can be connected to the PR332/P at any time and the latter recognises it automatically without having to be configured.
PR330/V module, when ordered mounted on the circuit breaker, does not require any external connection or voltage transformers since it is connected internally to the upper terminals of Tmax T7 and T8 (selector in “INT” position) though the internal voltage sockets.
At the ordering stage, the code of the internal voltage socket can be specified in addition to the code of the T7 or T8 circuit breaker so as to guarantee the possibility to install even afterwards the PR332/P trip unit equipped with the PR330/V module connected internally to the upper terminals. If necessary, the connection of the voltage sockets can be moved externally with connection to the terminal board using voltage transformers connected to the top or bottom terminals.
On the PR330/V module there is a selector which defines the method of wiring implemented to detect the voltage measurements (INT = connection of the internal module towards the top terminals – EXT = connection to the terminal box). The “Insulating Test” position guarantees carrying out the dielectric test.
A “Power Line” LED indicates presence of the line voltage.


### PR330/D-M communication module (Modbus RTU)

The PR330/D-M communication module is the solution for connecting Tmax to a Modbus network for remote supervision and control of the circuit breaker.
It is suitable for the PR332/P trip unit for T7 or T8. As for the PR330/V, this module can be added to the protection trip unit and its presence is recognised automatically.
The electronic trip unit is supplied with three LEDs on the front:
- “Power” power supply LED, which indicates the presence of auxiliary power supply to the PR333/ D-M module
- “Tx” data transmission LED
- “Rx” data reception LED.

# Tmax molded case circuit breakers
# Electrical and mechanical accessories

## PR330/R – Actuator module

The PR330/R actuator module is fitted in the right slot of T7 and it is used for opening (for T7 with lever operating mechanism it is allowed only the opening operation), and closing the circuit breaker by means of the shunt opening and closing releases by remote control. It is suitable for the PR332/P and must be compulsory ordered with the PR330/D-M communication module.

## BT030 wireless communication unit

BT030 is a device to be connected to the Test connector of PR222DS, PR232/P, PR331/P and PR332/P. It allows Bluetooth communication between the protection trip unit and a hand-held or laptop PC with a Bluetooth port. BT030 can also be used with Emax circuit breakers fitted with PR121/P, PR122/P and PR123/P.
This device is dedicated for use with the SD-Pocket und SD-TestBus2 application.
BT030 can provide the power supply needed for self-supply and for the protection release by means of a rechargeable Li-ion battery.


## PR030/B power supply unit

With this accessory, which is always supplied with the PR332/P range of trip units, it is possible to read and configure the parameters of the unit whatever the state of the circuit breaker is (open-closed, in the isolated for test position or racked-in, with/without auxiliary power supply).
PR030/B is needed for the readout of the data relative to trips if the trip occurred more than 48 hours previously and the trip unit was no longer supplied.
An electronic circuit inside allows power supply to the unit for about 3 hours continuously to carry out just the data reading and configuration operations.
The life of the battery decreases if the SACE PR030/B is also used to carry out the Trip test and the Auto test.

## Trip unit adapter

In order to allow all the connections between the electronic trip unit type PR33x and the terminal board on the circuit breaker, the circuit breaker it self must be fitted with a trip unit adapter.
Two different trip unit adapters are available: one is suitable with T7 level operating mechanism, the other with T7 motorizable.

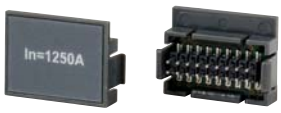


## Rating plug

Available on the electronic trip units which can be mounted on T7, the rating plug must be applied on the front of the trip unit itself and provides information about the current sensor settings. It is therefore no longer necessary to change the circuit breaker current sensors, but is sufficient just to replace the rating plug to obtain modification of the rated current of the circuit breaker.

| Type of circuit breaker | Rated current Iu | In (A) | | | | | | | | |
|---|---|---|---|---|---|---|---|---|---|---|
| | | 400 | 600 | 800 | 1000 | 1200 | 1600 | 2000 | 2500 | 3000 |
| T7 | 1000 | • | • | • | • | - | - | - | - | - |
| | 1200 | • | • | • | • | • | - | - | - | - |
| T8 | 1600 | - | - | - | • | • | • | - | - | - |
| | 2000 | - | - | - | • | • | • | • | - | - |
| | 2500 | - | - | - | • | • | • | • | • | |
| | 3000 | - | - | - | • | • | • | • | • | • |

## Current sensor for external neutral

This is applied to the external neutral conductor and allows protection G against earth faults to be carried out with external neutral three-pole circuit breakers.
The current sensor must be connected to the trip unit by means of the specific connectors X4 for T4, T5 and T6 or with a direct connection in the terminal board for T7 and T8. The combination is not possible with electronic trip unit PR221, PR231 and PR232.

| T4 [A] | T5 [A] | T6 [A] | T7 [A] | T8 [A] |
|---|---|---|---|---|
| 100 | 300 | 600 | 400 | 1000 |
| 150 | 400 | 800 | 600 | 1200 |
| 250 | 600 | - | 800 | 1600 |
| - | - | - | 1000 | 2000 |
| - | - | - | 1200 | 2500 |
| - | - | - | - | 3000 |

## Connectors

Connectors X3 and X4 allow connection of the electronic trip units with external plant units or components. In fact, they are used to make the L alarm signal available outside, connection of the external neutral and allows two-way communication from the circuit breaker fitted with dialogue towards the outside and vice versa.
Both the connectors are available both for fixed version circuit breakers and for plug-in or draw out version circuit breakers.

| Connector | Function | Trip unit |
|---|---|---|
| X3 | PR021/K | PR222DS/PD-A |
| | L alarm signal | PR222DS/P, PR222DS/PD-A |
| | Auxiliary supply | PR222DS/PD-A |
| | EP 010 | PR222DS/PD-A |
| X4 | External neutral | PR222DS/P, PR222DS/PD-A |

# Tmax molded case circuit breakers
# Electrical and mechanical accessories

## Accessories for trip units

| Circuit breakers equipped with electronic trip units | T2-T4-T5-T6 | T4-T5-T6 | | T7 - T8 | | | |
|---|---|---|---|---|---|---|---|
| | PR221 | PR222DS/P | PR222DS/PD-A | PR231/P | PR232/P | PR331/P | PR332/P |
| FDU[2] - Front display unit | - | • | • | - | - | - | - |
| HMI030[1] - Interface on the front of switchgear | - | - | • | - | - | • | • |
| X3 - Connectors | - | • | • [3] | - | - | - | - |
| X4 - Connectors | - | • | • | - | - | - | - |
| BT030 - Wireless communication unit | - | • | • | - | • | • | • |
| MOE-E (AUX-E included)[2] - Motor operator | - | - | • | - | - | - | - |
| AUX-E - Auxiliary contacts | - | - | • | - | - | - | - |
| EP010[1] - Field Bus plug | - | - | • | - | - | - | • |
| CT - Current transformers | - | • | • | - | - | - | - |
| Rating plugs | - | - | - | • | • | • | • |
| PR030/B - Power supply unit | - | - | - | - | • | • | • |
| PR330/D-M - Communication module | - | - | - | - | - | - | • |
| PR330/V - Voltage measuring module | - | - | - | - | - | - | • |
| PR330/R - Actuator module | - | - | - | - | - | - | • |
| CT Sensor - Current sensors | - | - | - | - | - | • | • |

[1] Accessories not compatible
[2] Accessories not compatible
[3] Compulsory

## Bracket for fixing on DIN rail

This is applied to the fixed circuit breaker and allows installation:
- on standardized DIN EN 50022 rails (for T1, T2, T3);
- on standardized DIN EN 50023 rails (for Ts3).

The bracket for fixing on DIN rail is also available for Tmax circuit breakers combined with RC221 and RC222 residual current releases or with the solenoid operator of the side-by side type.
The fixing bracket kit for Ts3 circuit breakers also includes the front H = 1.77” (45 mm).

## Flange for compartment door

For Ts3 circuit breakers it is possible to use the same flange (to be ordered), which can be used with the circuit breaker (to be ordered separately), with the rotary handle operating mechanism, front for lever operating mechanism and motor operator.
All the flanges for T1, T2, T3, T4, T5, T6, T7 and T8 are of new design and do not require the use of screws for installation: fixing is greatly simplified by just a simple coupling operation. The flange for compartment door for T1, T2, T3, T4, T5, T6, T7 and T8 is always supplied with the circuit breakers. When a rotary handle operating mechanism or residual current releases is used, a dedicated flange is supplied to be used instead of the one supplied with the circuit breaker.
For T4, T5, T6 and T7 draw out circuit breakers, the flange supplied with fixed part must be used instead of the one supplied with the fixed circuit breaker.

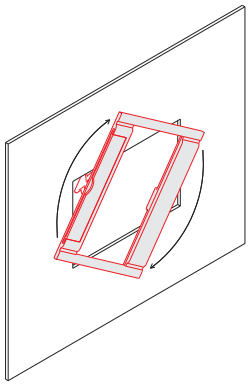

## Spare parts

A wide range of spare parts is available for the Tmax family of circuit breakers. For further details about the complete range of spare parts available, please ask for the “Spare Parts Catalogue”.

## Compatibility

An overview of the assembly compatibility of (internal) accessories with the Tmax Series circuit breakers can be found in this section.

### Possible combination of internal accessories

The drawing represents the internal slot of the circuit breakers. A, C and F are housed in the slots on the left of the operating lever, while B, D, E and G in the right one.

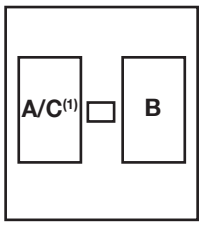


T1, T2 TMD, T3, Ts3, T4, T5, T6
3 poles

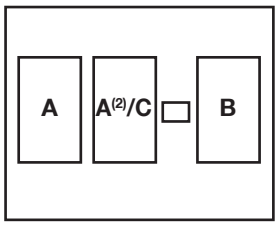


T1, T2 TMD, T3, Ts3, T4, T5, T6
4 poles

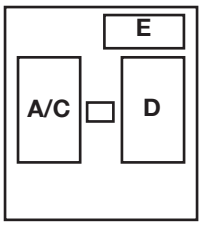


T2 PR221DS, 3 poles

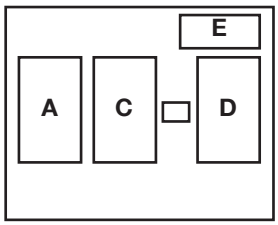


T2 PR221DS, 4 poles

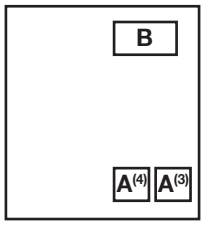


T7 3/4 poles

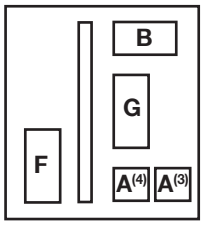


T7M 3/4 poles

(1) only for T1-T2-T3
(2) only SOR for T4-T5-T6. If use SOR-C order also the 3 way connector for second SOR-C 1SDA055273R1
(3) position for assembly of the SOR
(4) position for assembly of the UVR

A = Shunt trip (SOR) or Undervoltage release (UVR)
B = Auxiliary contacts
C = Trip coil of the residual current
D = Trip coil of the electronic trip unit PR221DS
E = Auxiliary contacts for T2 with electronic trip unit PR221DS
F = Spring charging motor
G = Closing coil (SCR)

# Table of contents
## Curves and technical information

# Tmax molded case circuit breakers
# Curves and technical information

## Examples of curve readout

### Example 1 - T4N 250 A

### Trip curves for power distribution (thermal magnetic trip unit)

Considering a T4N 250 In = 250 A circuit breaker. By means of the thermal adjustment trimmer, the current threshold $I_1$ is selected, for example at 0.9 x In (225 A); the magnetic trip threshold $I_3$, adjustable from 5 to 10 x In, we select at 10 x In, equal to 2500 A.
It can be noted that, on the basis of the conditions in which the overload is presented, i.e. with the circuit breaker at thermal running or not, the thermal relay trip varies considerably. For example, for an overload current of 2 x $I_1$, the trip time is between 21.4 and 105.3 s for hot trip, and between 105.3 and 357.8 s for cold trip.
For fault current values higher than 2500 A, the circuit breaker trips instantaneously with the magnetic protection.

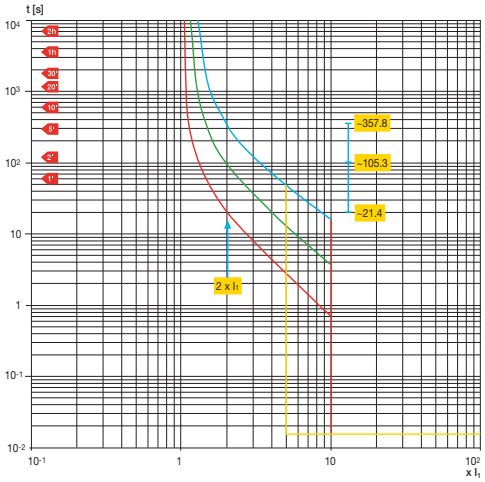


### Example 2 - T2H 100 A

### Current-limiting curves

The following figure shows the trend of Tmax T2 100 PR221 current-limiting curve at 480 V. The rms of the prospective symmetrical short circuit current is indicated on the abscissa of the diagram, whereas the peak value is on the ordinates.
For example, T2 at a voltage of 480 V limits the peak to 20 kA for a rms fault current of 40 kA.

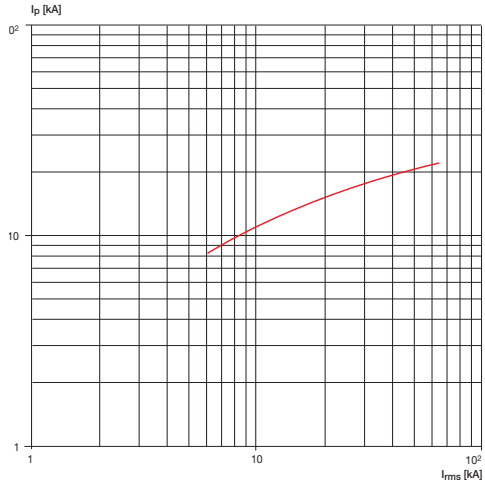


### Example 3 - T2H 30 A

### Specific let-through energy curve

The following figure shows the trend of Tmax T2 TM 30 A let-through energy at 480 V. The rms of the prospective symmetrical short circuit current is indicated on the abscissa of the diagram, whereas the ordinates show the specific let-through energy.
For example, T2 at a voltage of 480 V limits the $I^2t$ to 0,4x10^6 A^2s for a rms sc current of 40 kA.

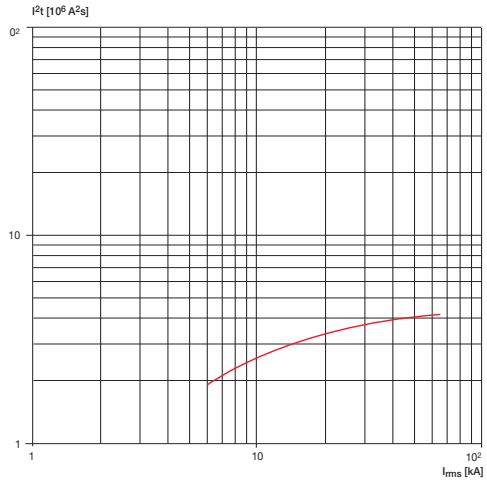


**Abbreviations used**

In = Ampère rating of the thermal magnetic or electronic trip unit
$I_1$ = Long-time pick-up setting
$I_3$ = instantaneous pick up setting
$I_{rms}$ = prospective symmetrical short-circuit current

# Tmax molded case circuit breakers
## Curves and technical information

### Trip curves for power distribution
### Circuit breakers with thermal magnetic trip units

#### T1 100 / T1 100 1P – TMF
In = 15 - 70 A

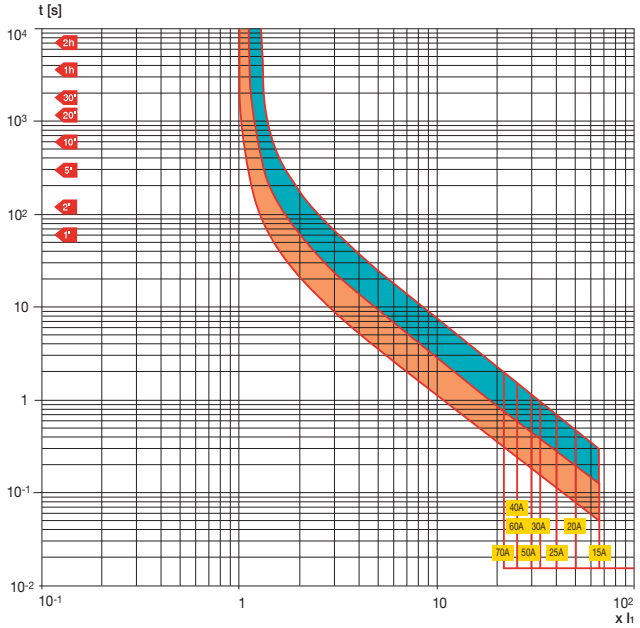


#### T1 100 / T1 100 1P – TMF
In = 80 - 100 A

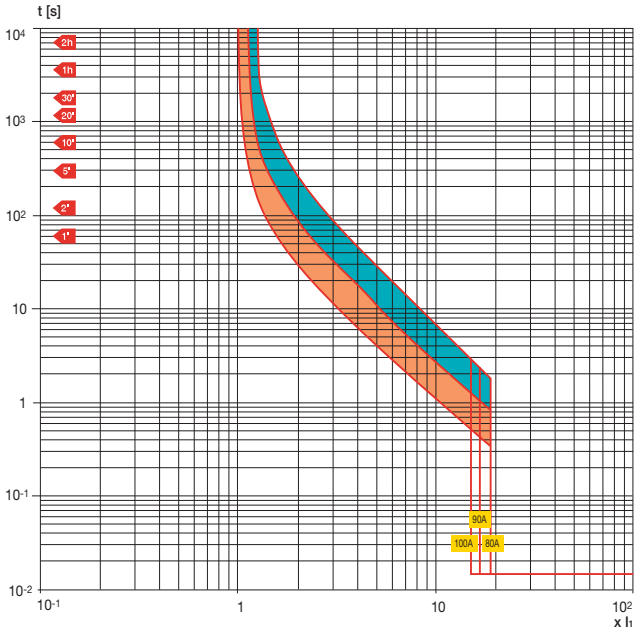


#### T2 100 – TMF
In = 15 - 50 A

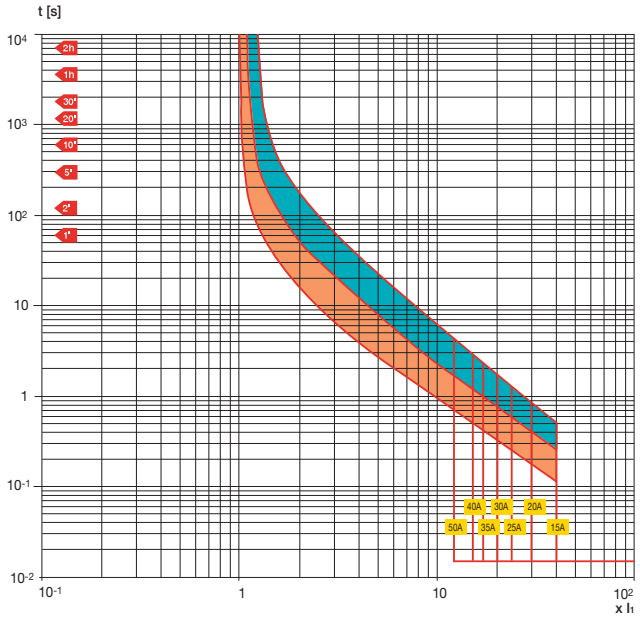


#### T2 100 – TMF
In = 60 - 100 A

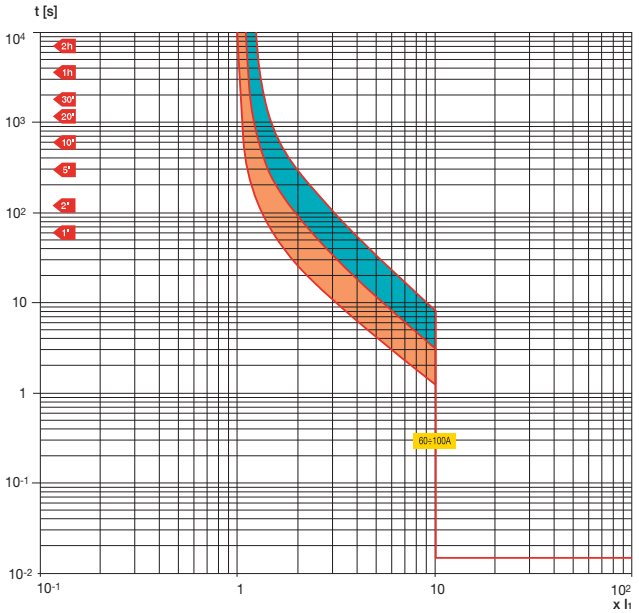

# Tmax molded case circuit breakers
## Curves and technical information

### T3 225 – TMF
In = 60 - 100 A

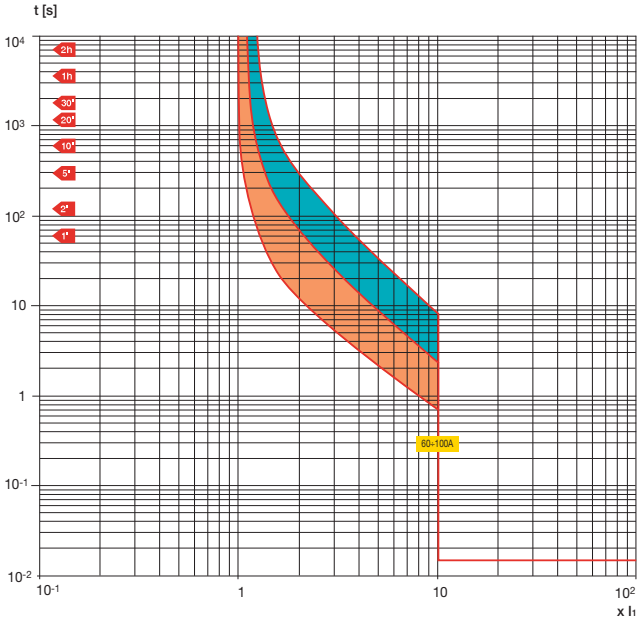


### T3 225 – TMF
In = 125 - 225 A

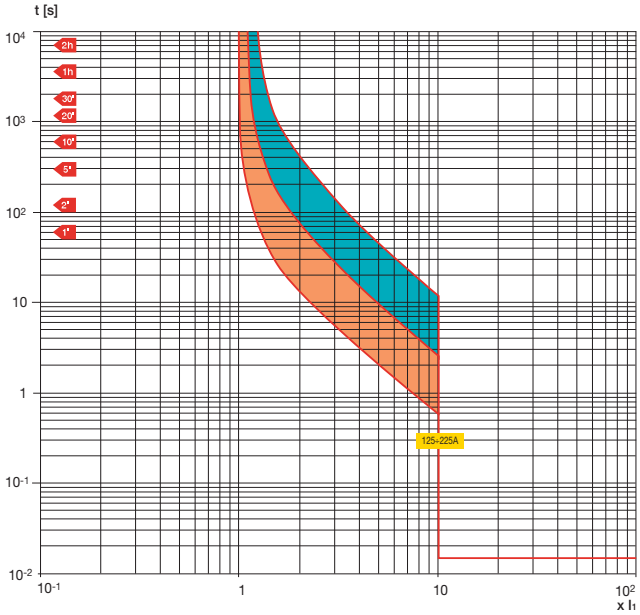


### Ts3 150 – TMF
In = 15 A

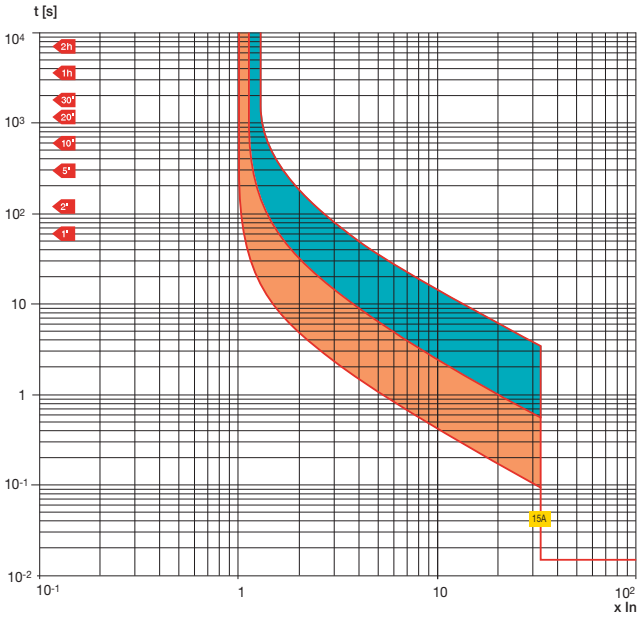


### Ts3 150 – TMF
In = 20 - 30 A

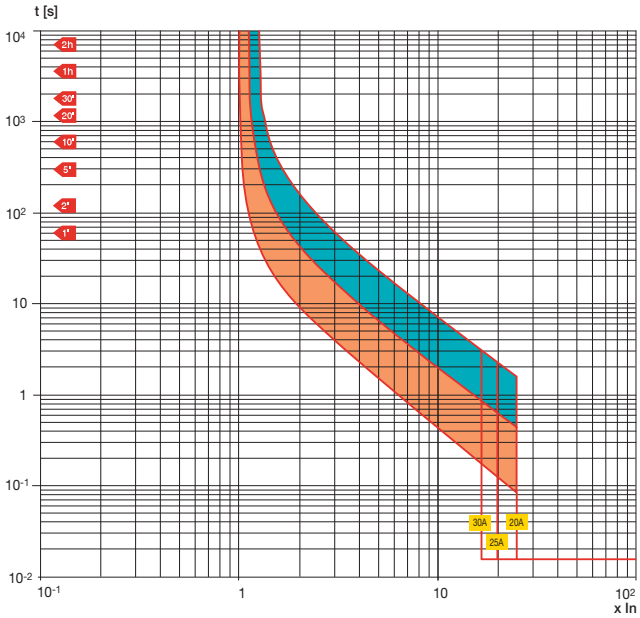

# Tmax molded case circuit breakers
## Curves and technical information

### Ts3 150 – TMF
In = 35 - 50 A

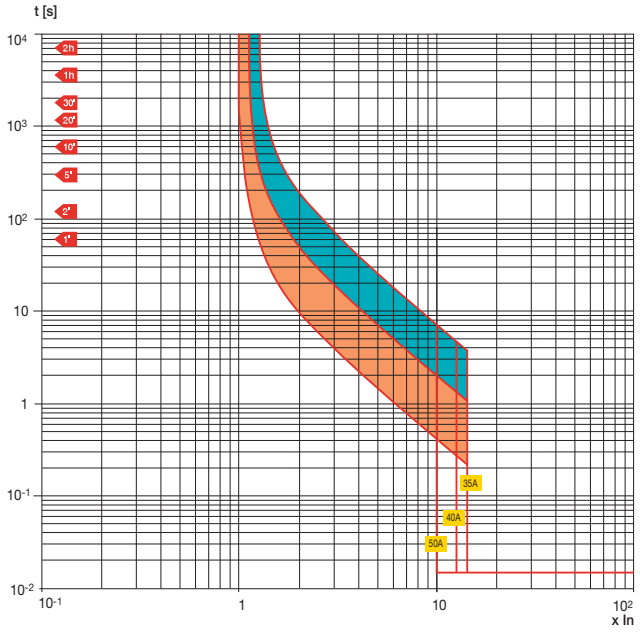


### Ts3 150 – TMF
In = 60 - 100 A

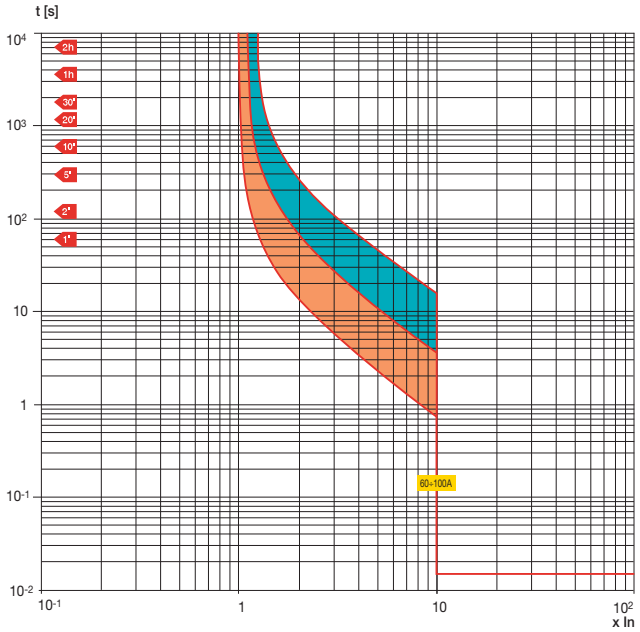


### Ts3 150 / Ts3 225 – TMF
In = 125 - 225 A

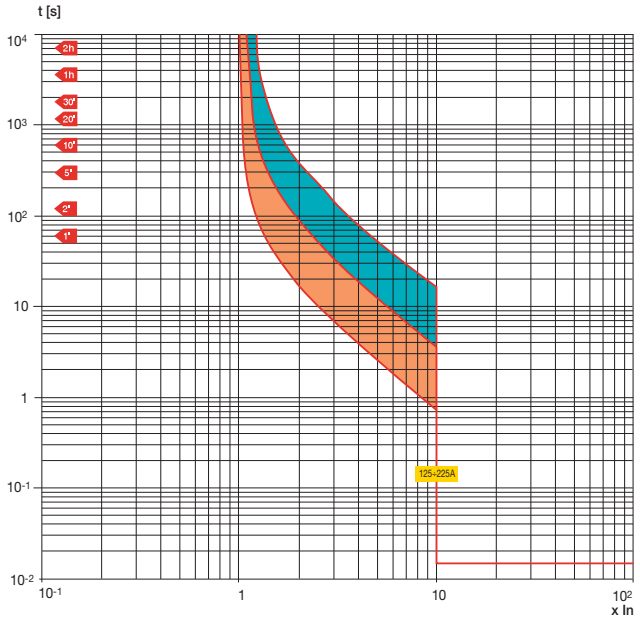


### T4 250 – TMF/TMD
In = 20 - 50 A
In = 15 - 20 TMF In = 30 - 50 TMD

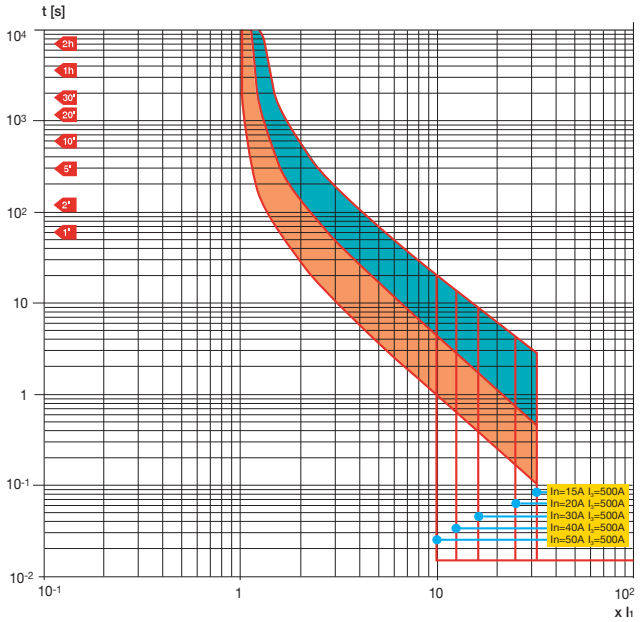

# Tmax molded case circuit breakers
## Curves and technical information

### T4 250 – TMA
In = 80 - 250 A

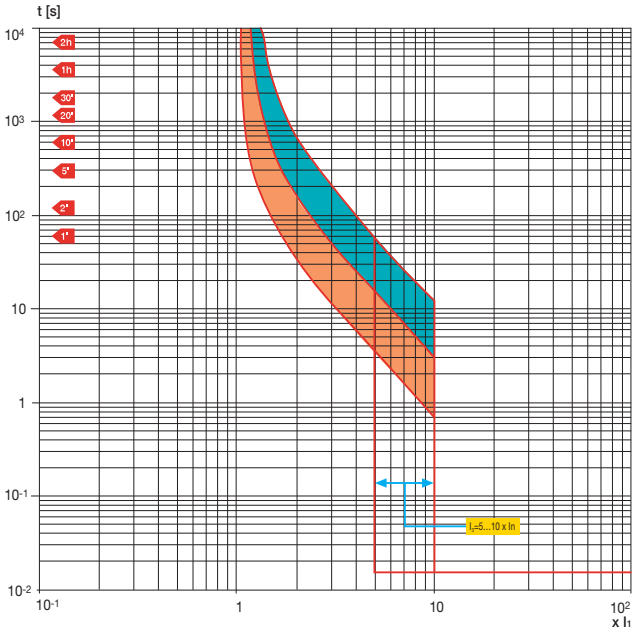


### T5 400 – TMA
In = 300 - 400 A

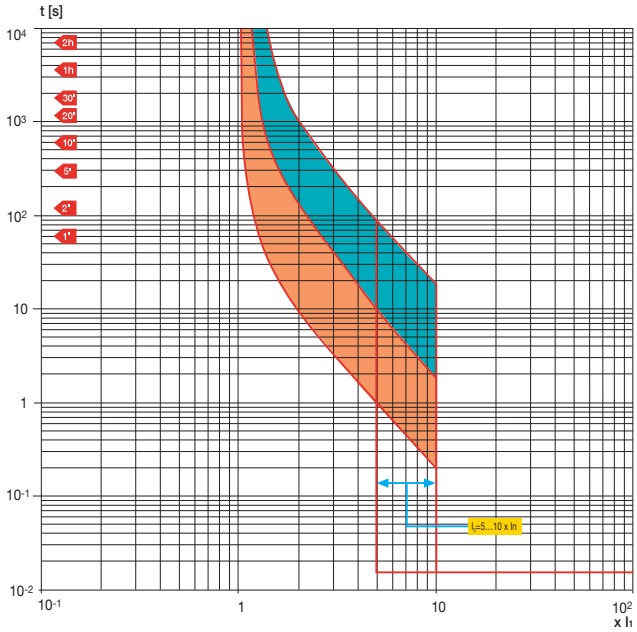


### T6 800 – TMA
In = 800 A

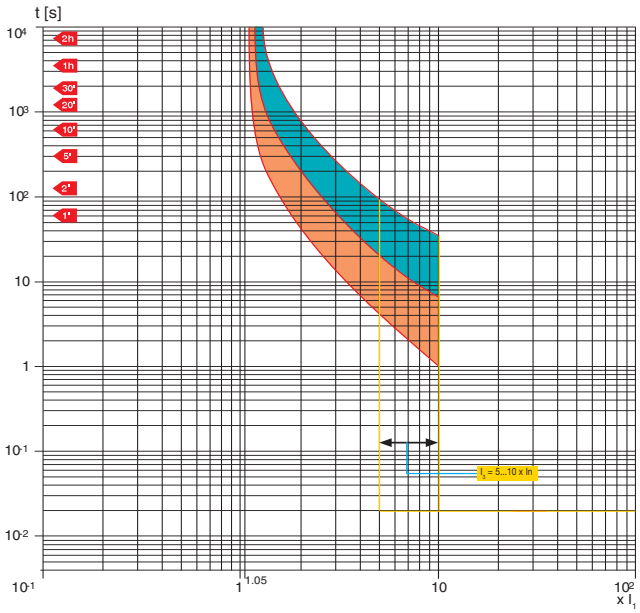

# Tmax molded case circuit breakers
# Curves and technical information

## Trip curves for power distribution
## Circuit breakers with thermal magnetic trip units

### T2 100 – PR221DS-LS
#### L-I Functions

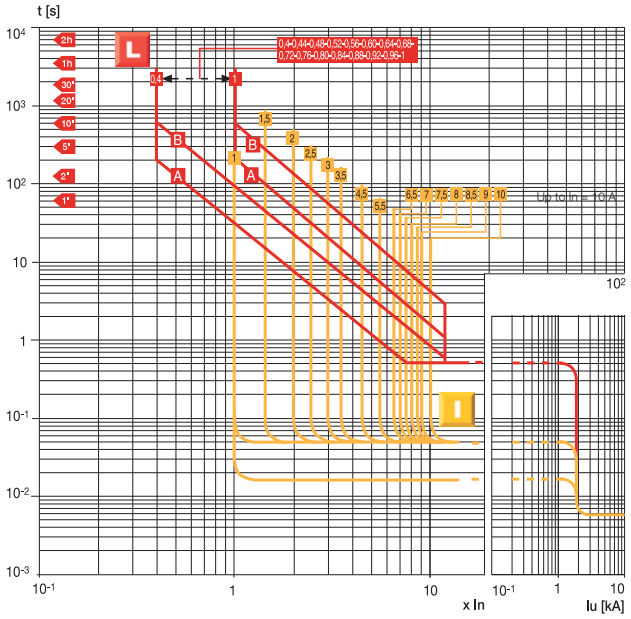


### T2 100 – PR221DS-LS
#### L-S Functions

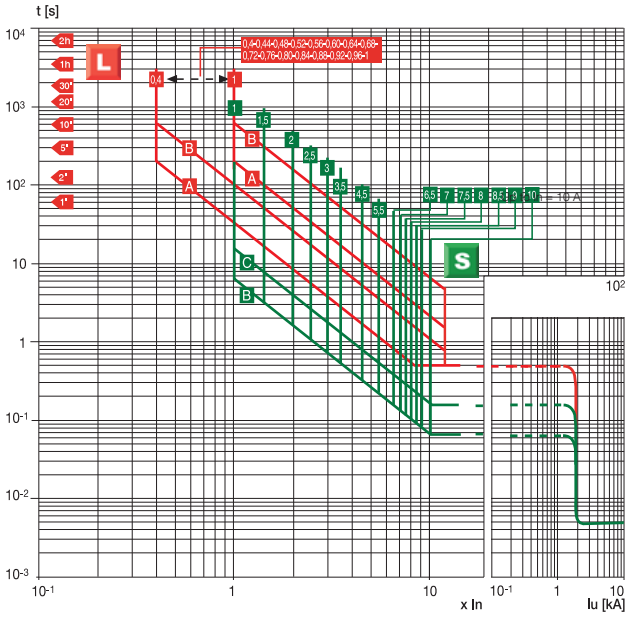


### T2 100 – PR221DS-I
#### I Function

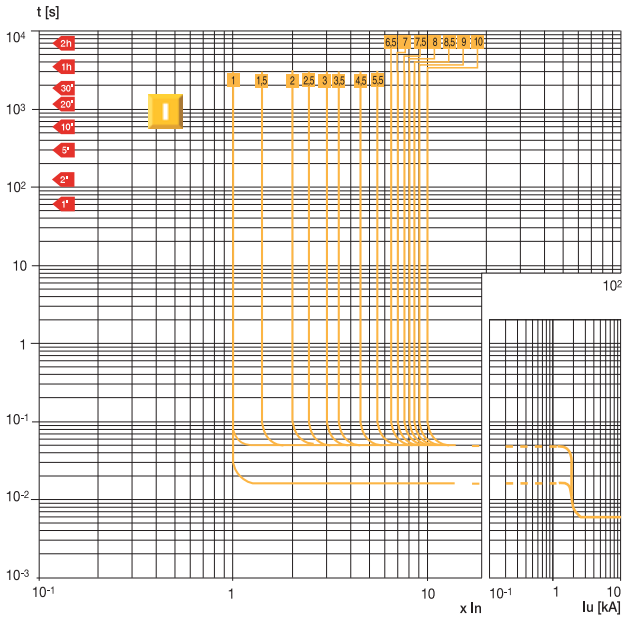


### T4 250 / T5 400/600 – PR221DS
#### L-I Functions

**Note**: For T5 In = 600 A - $I_3$max = 9.5 x In

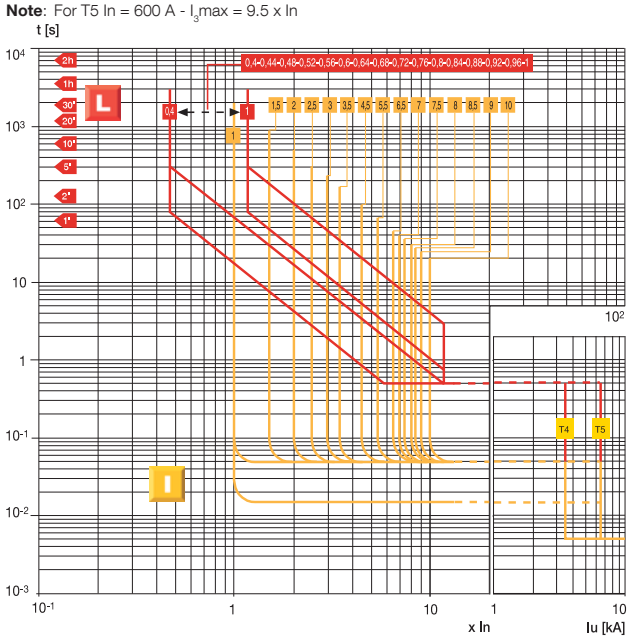

# Tmax molded case circuit breakers
# Curves and technical information

## T4 250 / T5 400/600 – PR221DS

### L-S Functions

**Note**: For T5 In = 600 A - $I_2$max = 9.5 x In

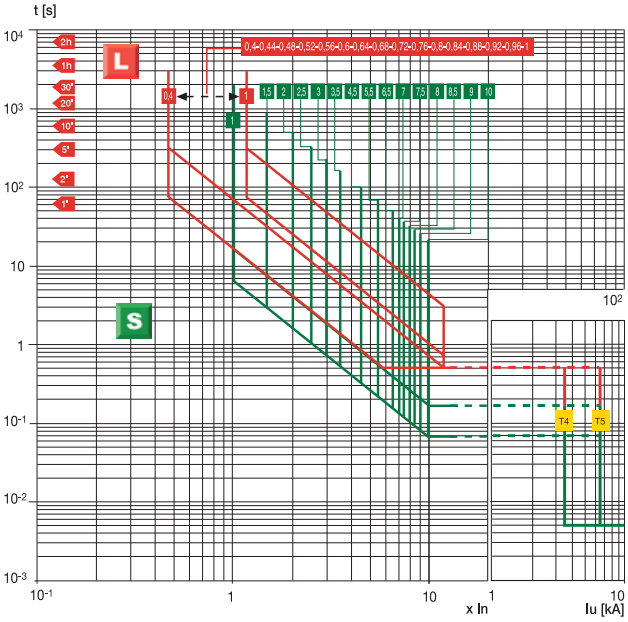


## T4 250 / T5 400/600 PR222DS/P and PR222DS/PD-A

### L-S-I Functions ($I^2t$ const = ON)

**Note**: For T5 In = 600 A - $I_2$max = 9.5 x In, $I_3$max = 9.5 x In

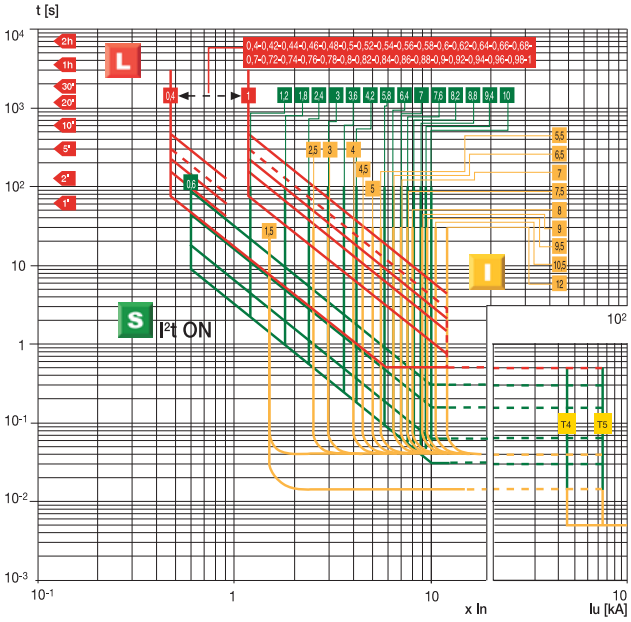


## T4 250 / T5 400/600 PR222DS/P and PR222DS/PD-A

### L-S-I Functions ($I^2t$ const = OFF)

**Note**: For T5 In = 600 A - $I_2$max = 9.5 x In, $I_3$max = 9.5 x In

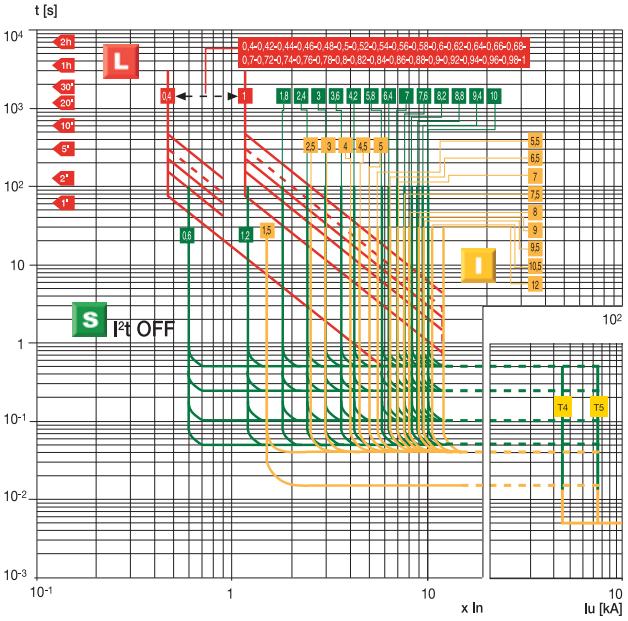


## T4 250 / T5 400/600 PR222DS/P and PR222DS/PD-A

### G Function

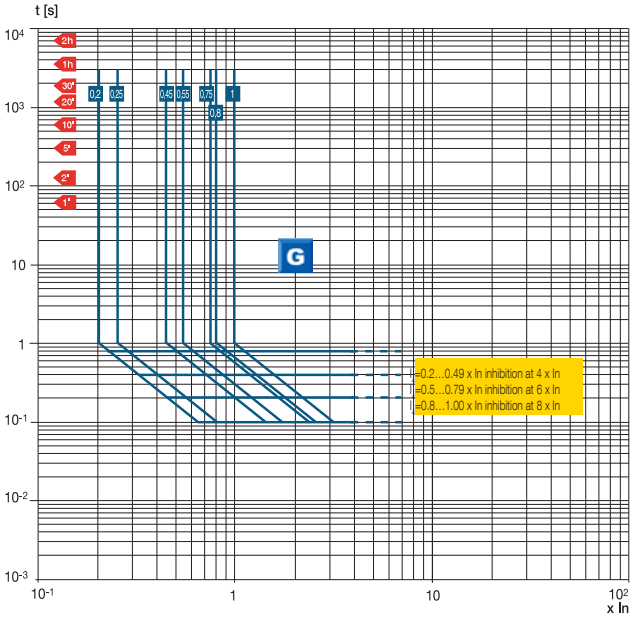

# Tmax molded case circuit breakers
## Curves and technical information

### T6 800 – PR221DS
#### L-I Functions

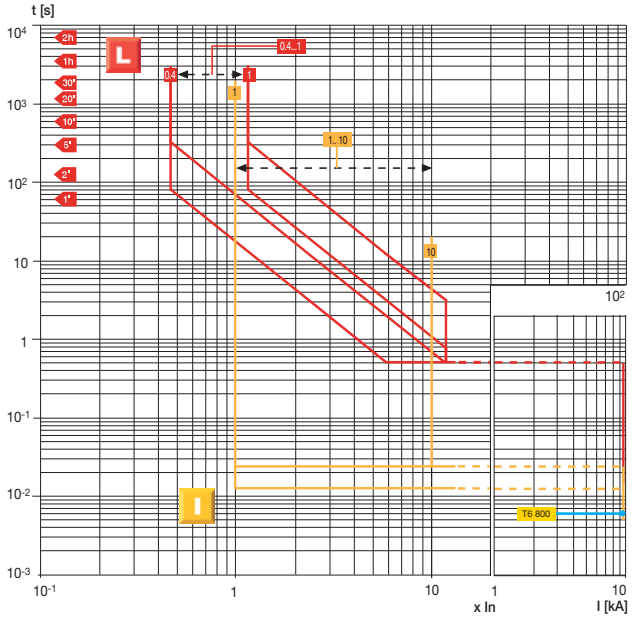


### T6 800 – PR221DS
#### L-S Functions

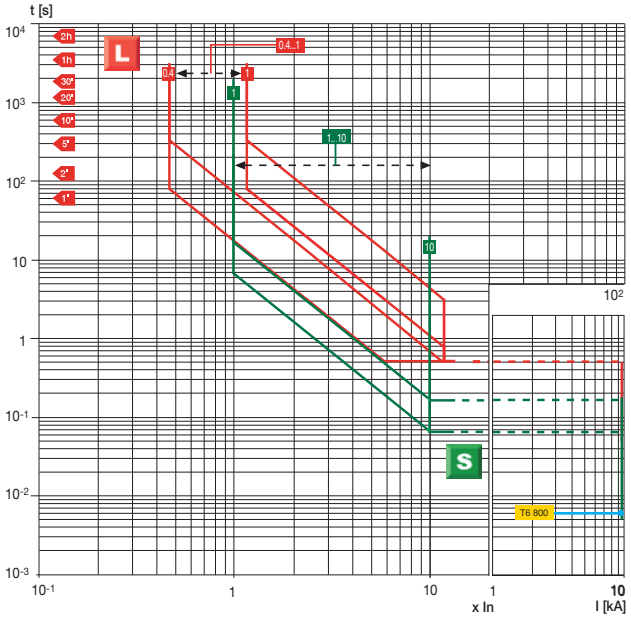


### T6 800 – PR222DS and PR222DS/PD-A
#### L-S-I Functions

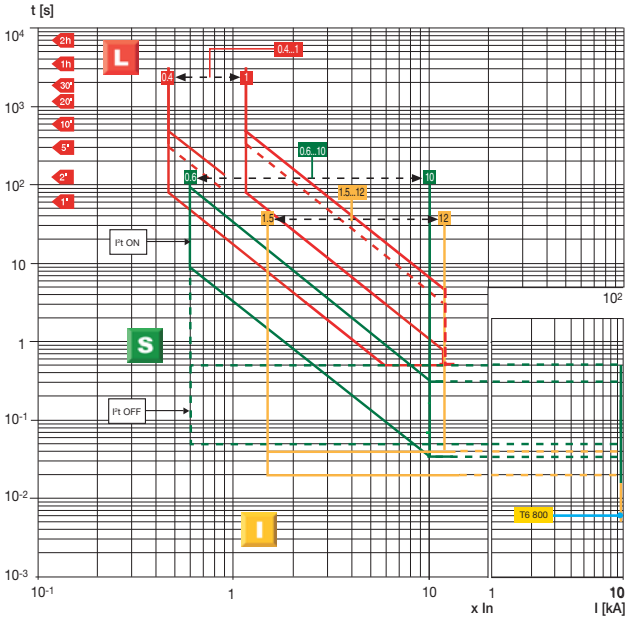


### T6 800 – PR222DS and PR222DS/PD-A
#### G Function

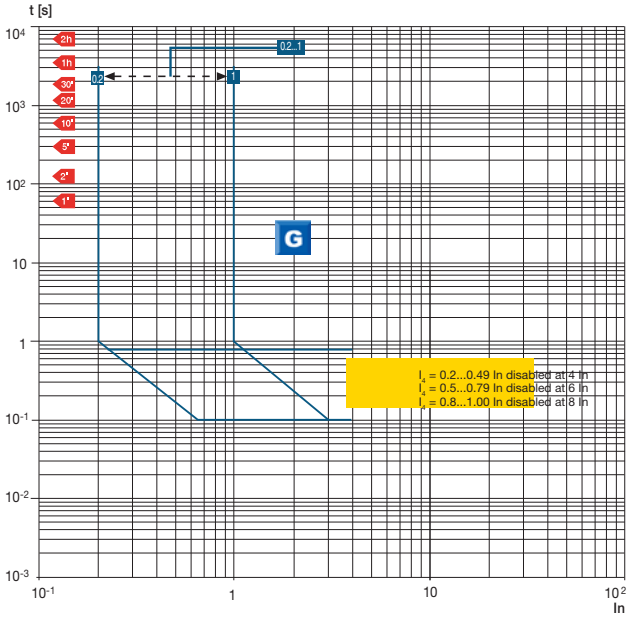

# Tmax molded case circuit breakers
## Curves and technical information

### T7 1000/1200 – PR231/P
#### L-I Functions

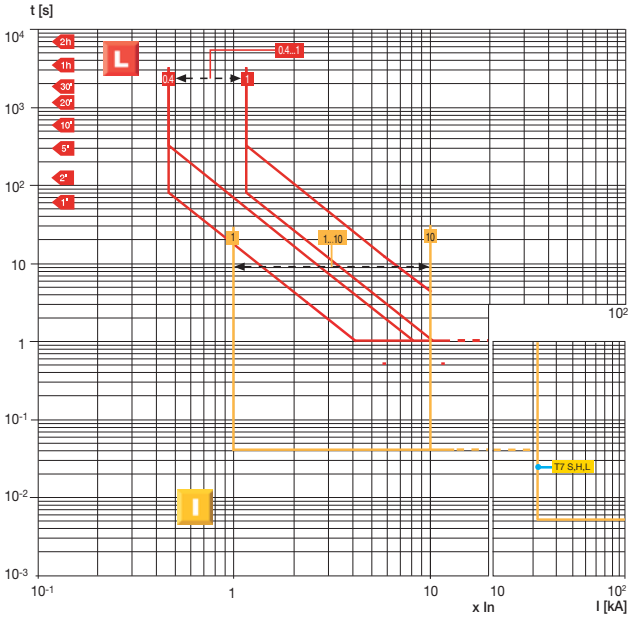


### T7 1000/1200 – PR231/P
#### L-S Functions

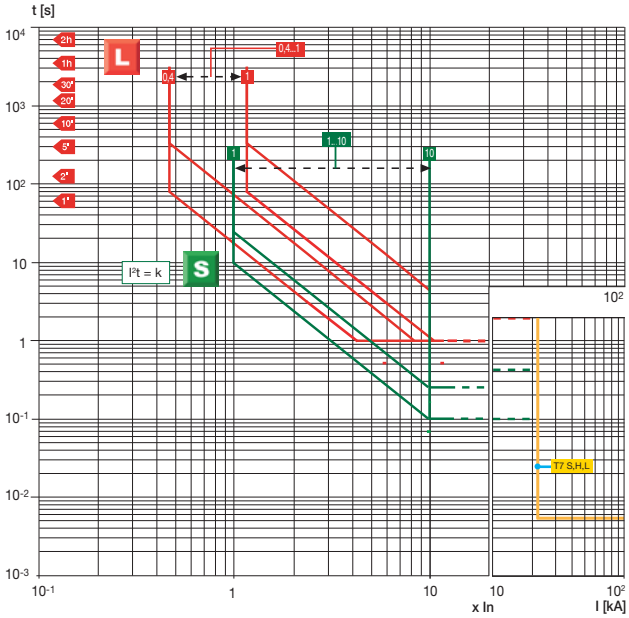


### T7 1000/1200 – PR232/P
#### L-S-I Functions

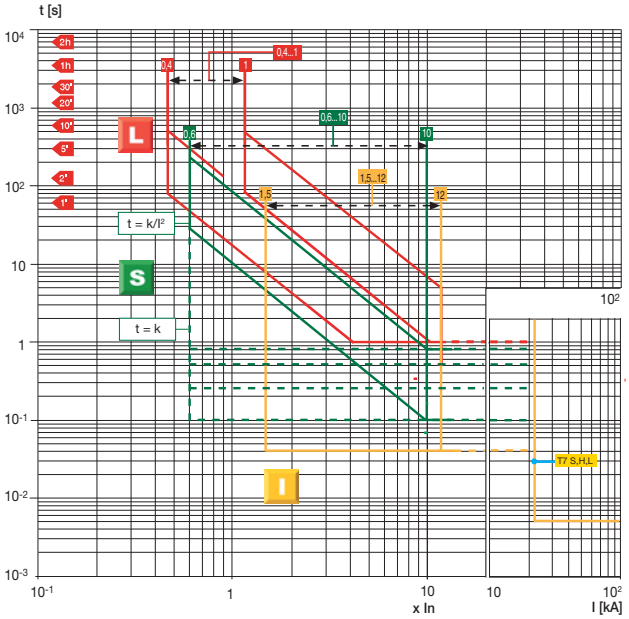


### T7 1000/1200 – PR331/P
#### L-S-I Functions

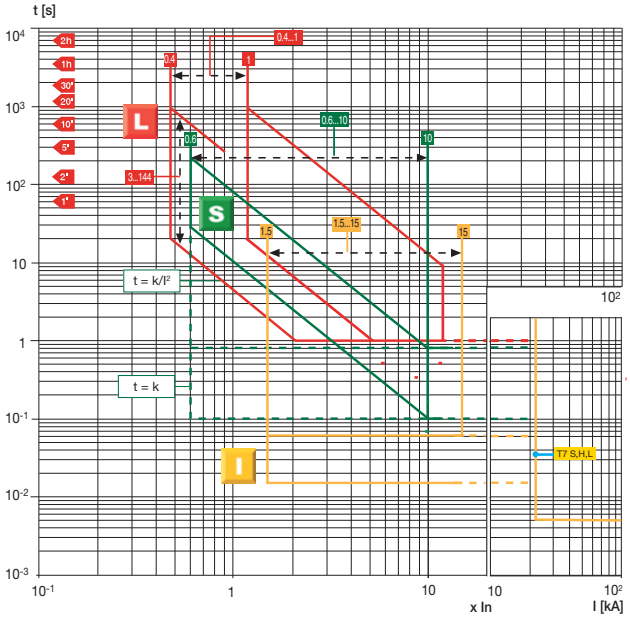

# Tmax molded case circuit breakers
## Curves and technical information

### T7 1000/1200 – PR331/P
#### G Function

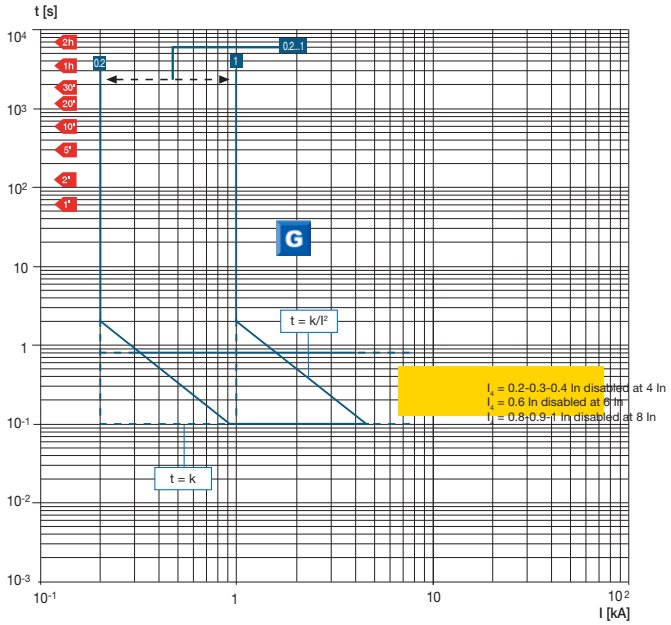


### T7 1000/1200 – PR332/P
#### L-I Functions

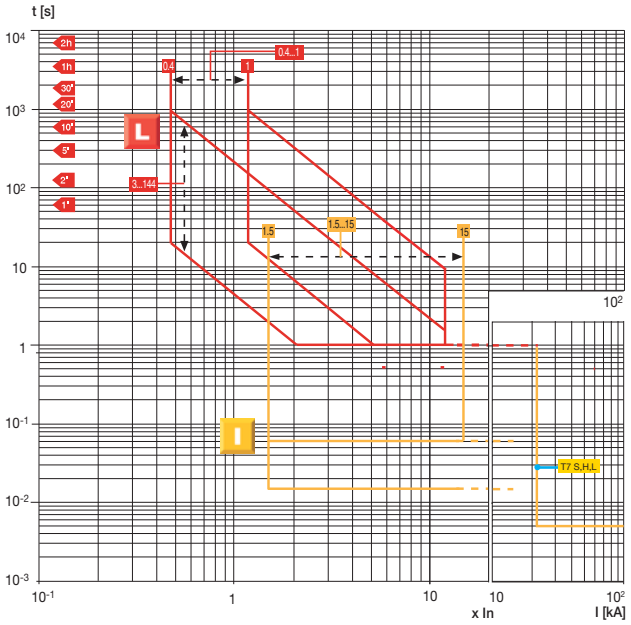


### T7 1000/1200 – PR332/P
#### L-S-I Functions

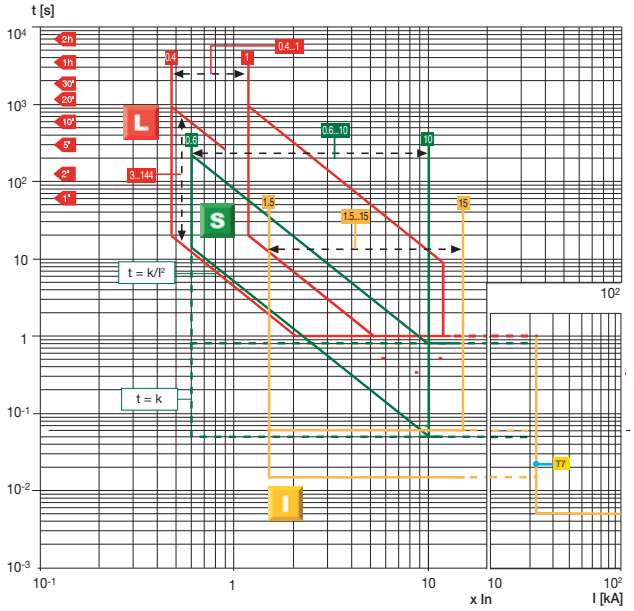


### T7 1000/1200 – PR332/P
#### G Function

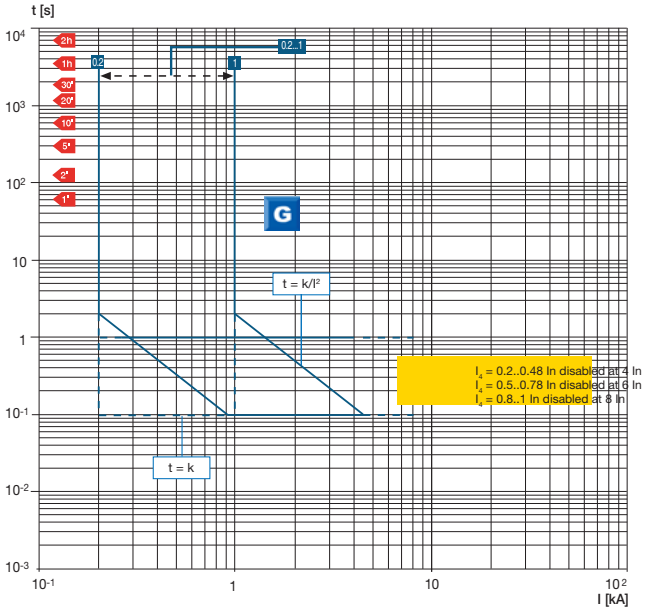

## T7 1000/1200 – PR332/P

### Rc Function

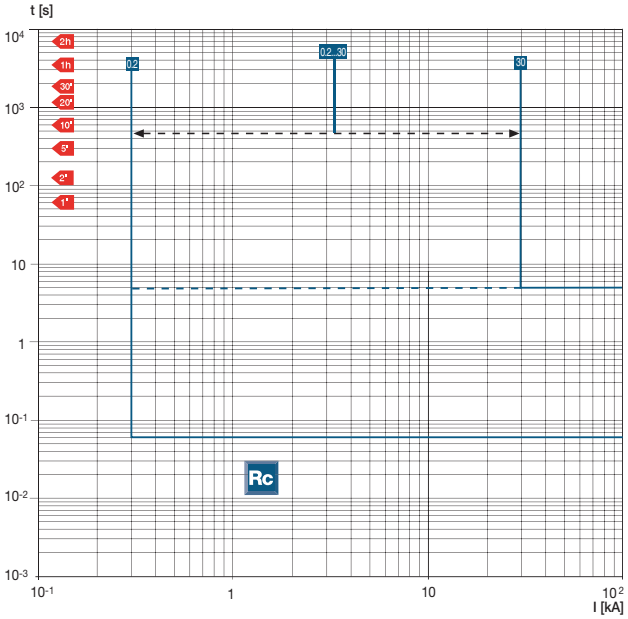


## T7 1000/1200 – PR332/P

### L Function

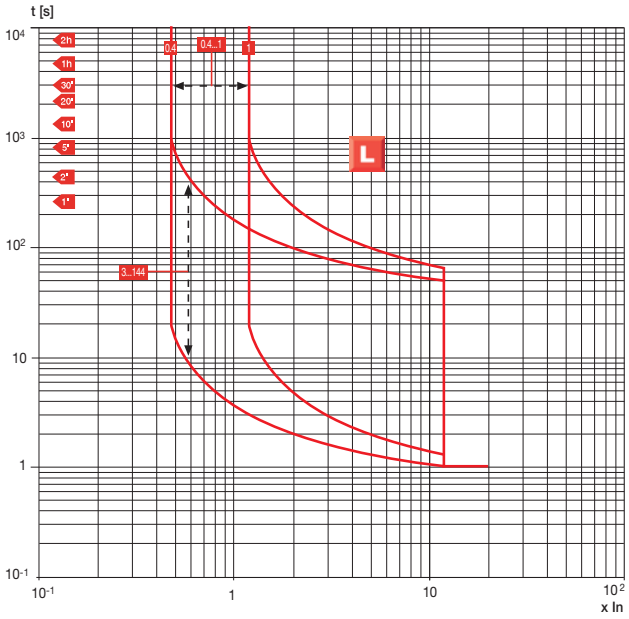


## T7 1000/1200 – PR332/P

### L Function

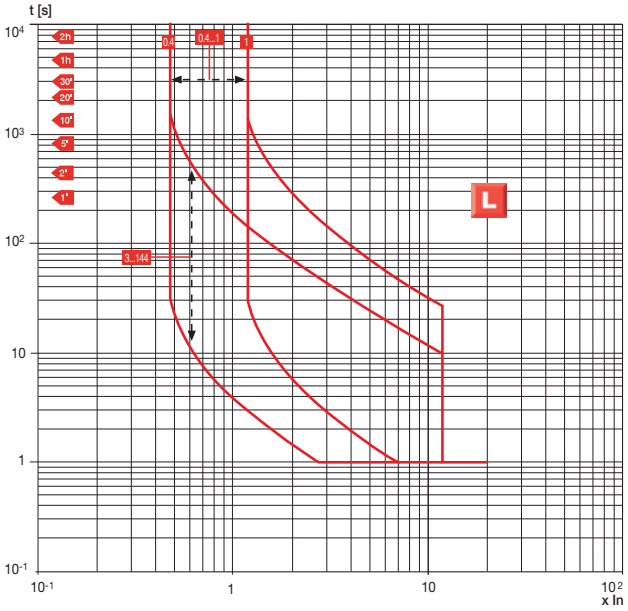


## T7 1000/1200 – PR332/P

### L Function

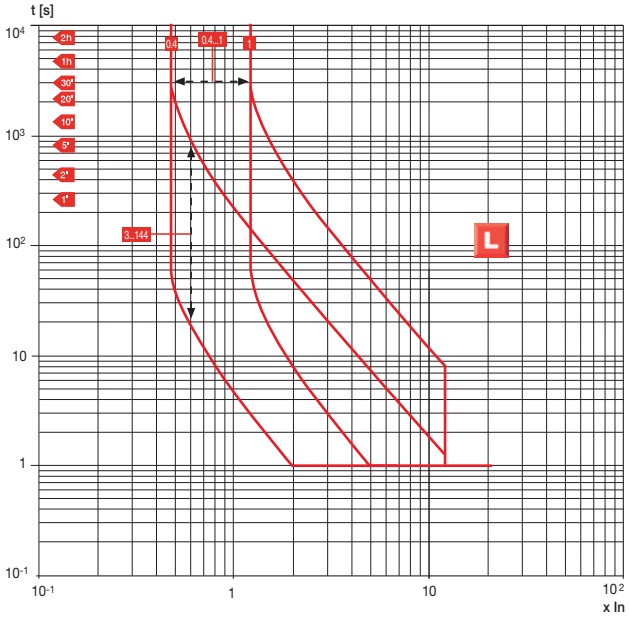

# Tmax molded case circuit breakers
## Curves and technical information

### T7 1000/1200 – PR332/P
#### U Function

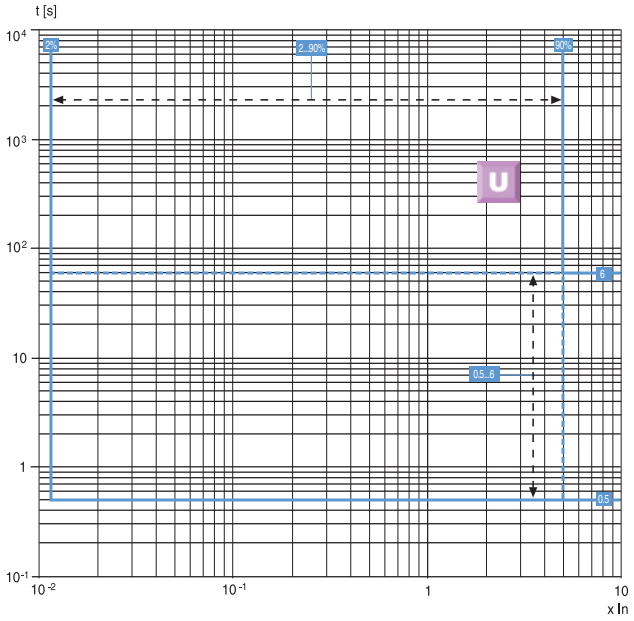


### T7 1000/1200 – PR332/P with PR330/V
#### UV Function

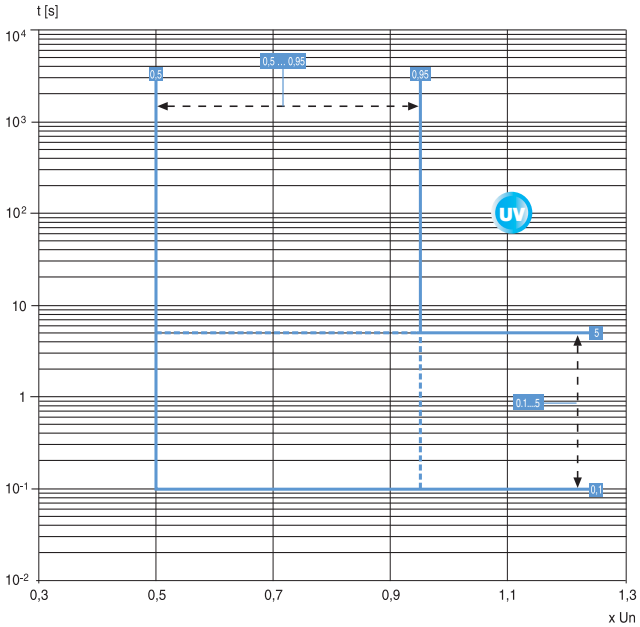


### T7 1000/1200 – PR332/P with PR330/V
#### OV Function

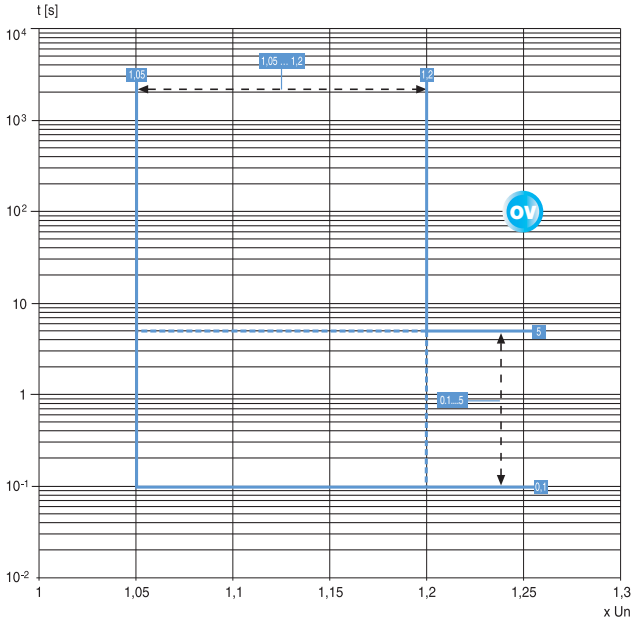


### T7 1000/1200 – PR332/P with PR330/V
#### RV Function

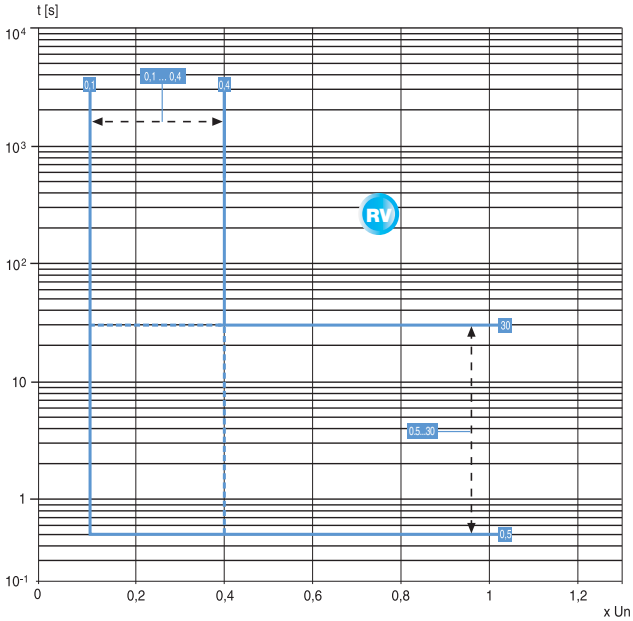

# Tmax molded case circuit breakers
# Curves and technical information

## T7 1000/1200 – PR332/P with PR330/V

### RP Function

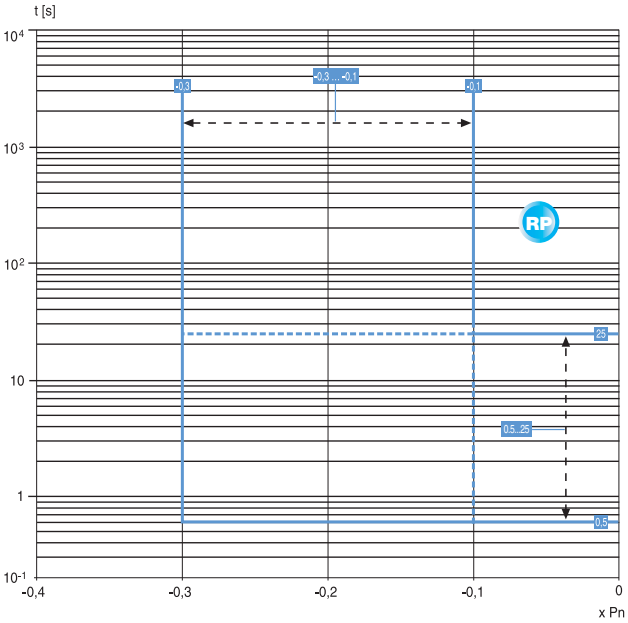


## T8 1600/2000/2500/3000 – PR331/P

### Functions L-S-I

**Note**: For T8 In = 3000 A - $I_3$max = 12 x In

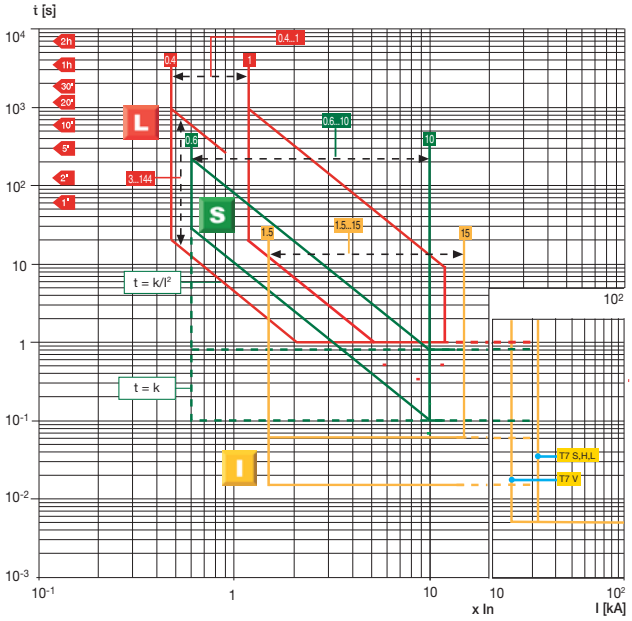


## T8 1600/2000/2500/3000 – PR331/P

### Function G

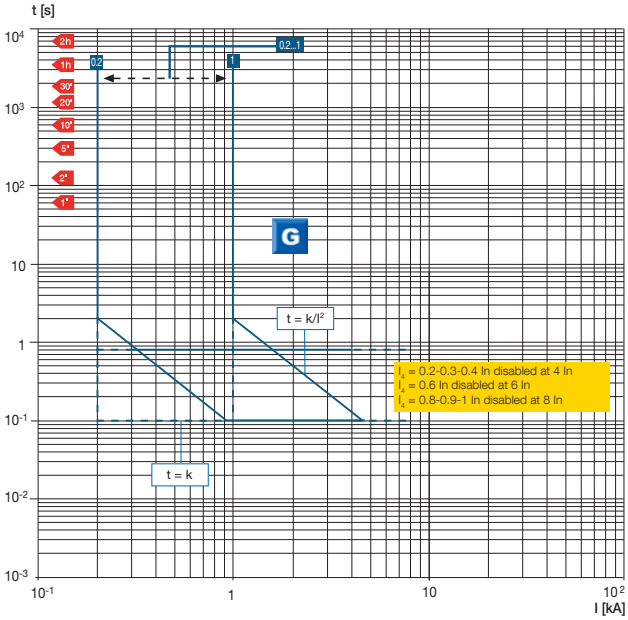


## T8 1600/2000/2500/3000 – PR332/P

### L-I Functions

**Note**: For T8 In = 3000 A - $I_3$max = 12 x In

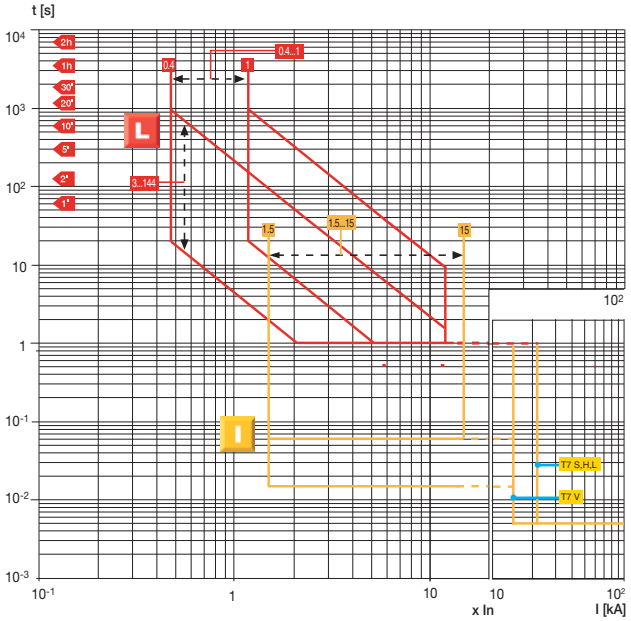

# Tmax molded case circuit breakers
# Curves and technical information

## T8 1600/2000/2500/3000 – PR332/P
### L-S-I Functions

**Note**: For T8 In = 3000 A - $I_3$max = 12 x In

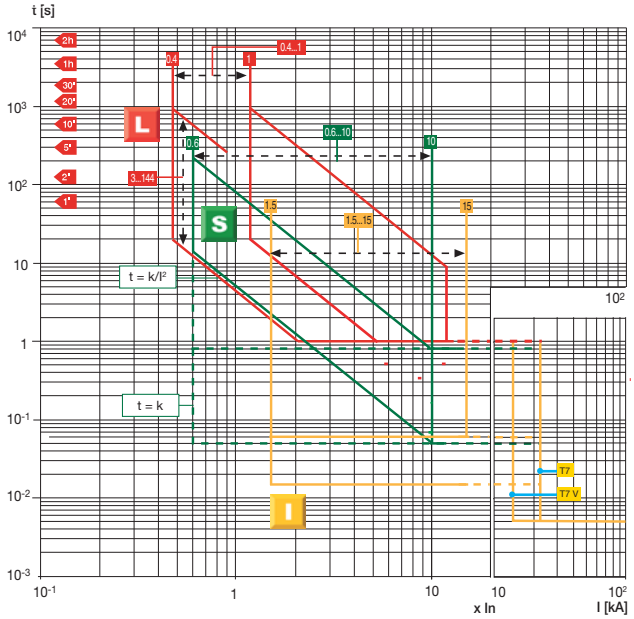


## T8 1600/2000/2500/3000 – PR332/P
### G Function

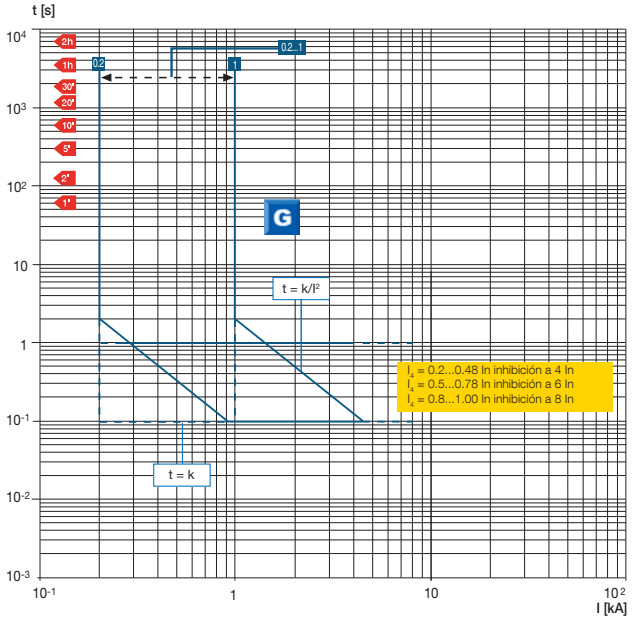


## T8 1600/2000/2500/3000 – PR332/P
### U Function

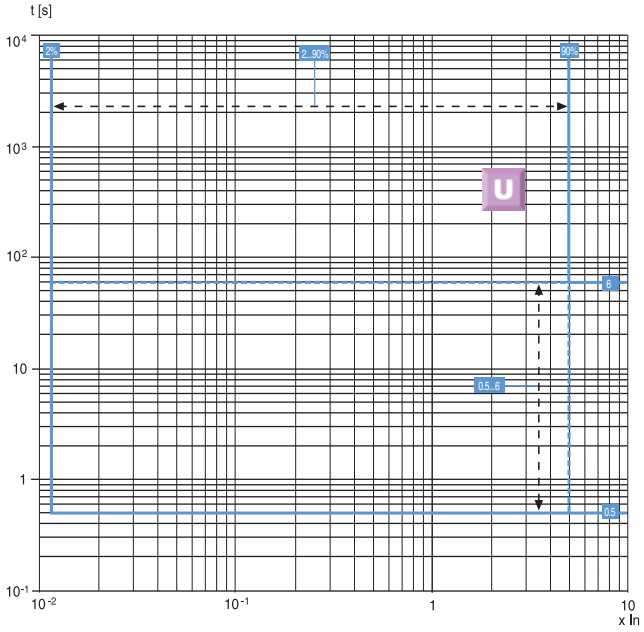


## T8 1600/2000/2500/3000 PR332/P + PR330/V
### UV Function

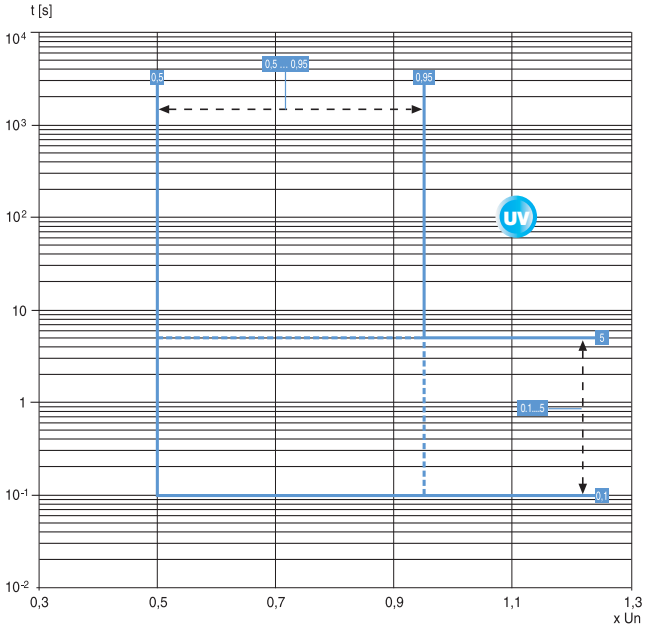

## T8 1600/2000/2500/3000 PR332/P + PR330/V

### OV Function

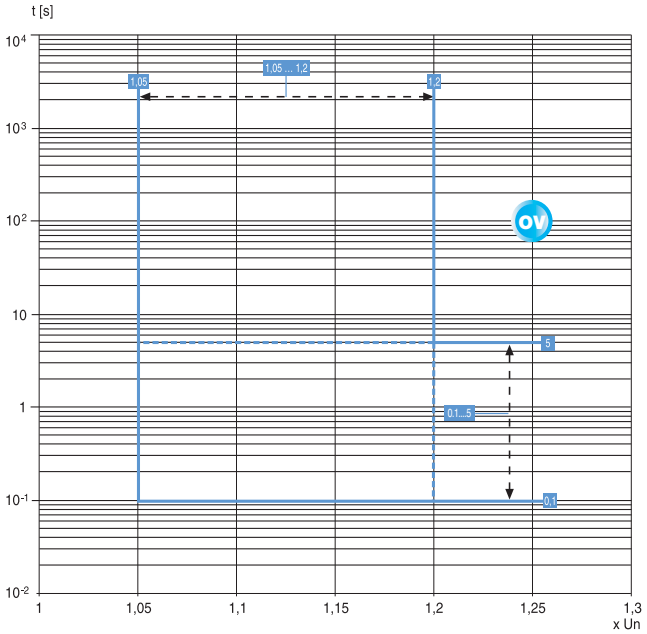


## T8 1600/2000/2500/3000 PR332/P + PR330/V

### RV Function

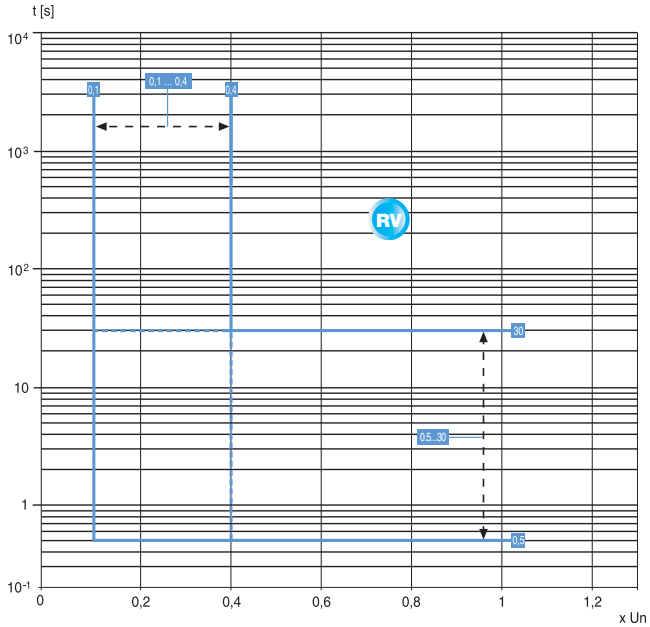


## T8 1600/2000/2500/3000 PR332/P + PR330/V

### RP Function

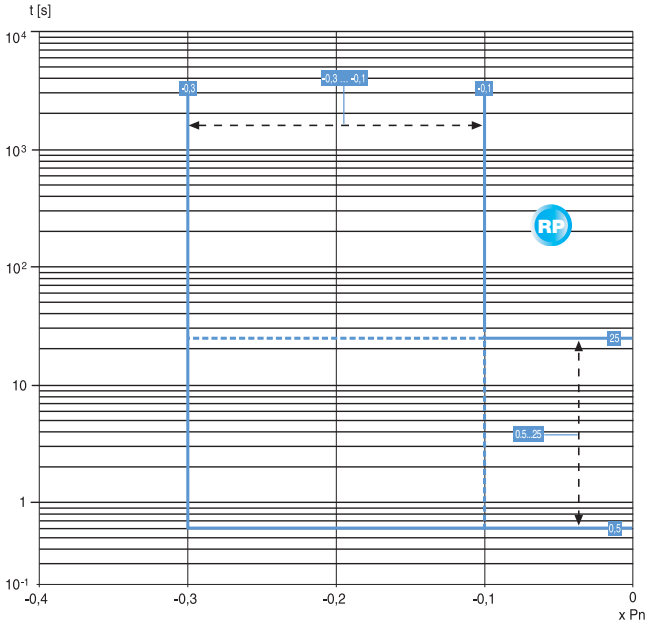

# Tmax molded case circuit breakers
## Curves and technical information

### Trip curves for motor protection (MCP)
### Circuit breakers with magnetic only trip units

### T2-T3 100 MCP

Adjustable magnetic only trip unit $I_3$ = 6...12 x In

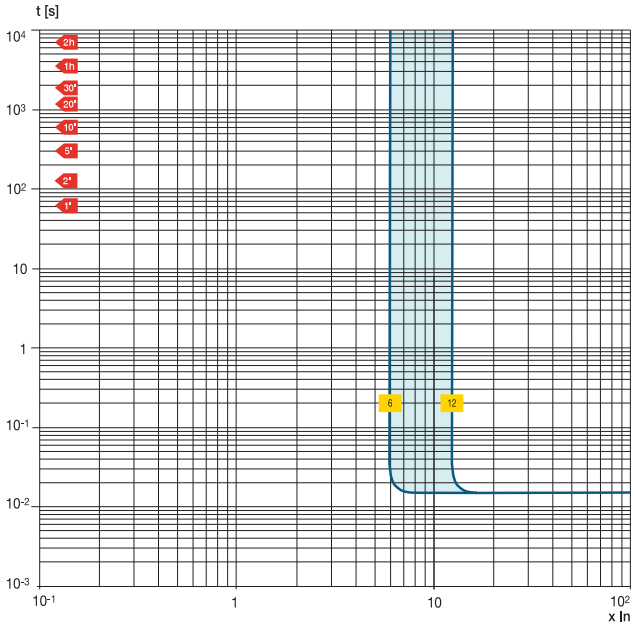


### Ts3 150

Adjustable magnetic only trip unit $I_3$ = 4...12 x In

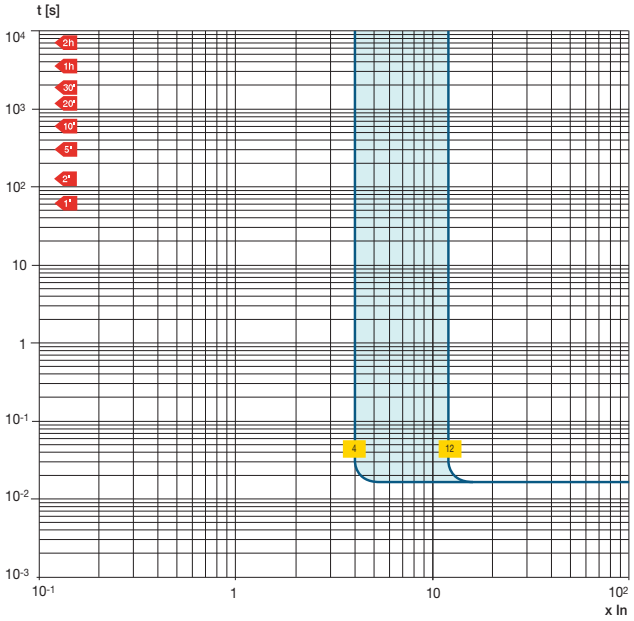

# Tmax molded case circuit breakers
# Curves and technical information

## Trip curves for motor protection (MCP)
## Circuit breakers with electronic trip units

### T2 100 – PR221DS-I
#### I Function

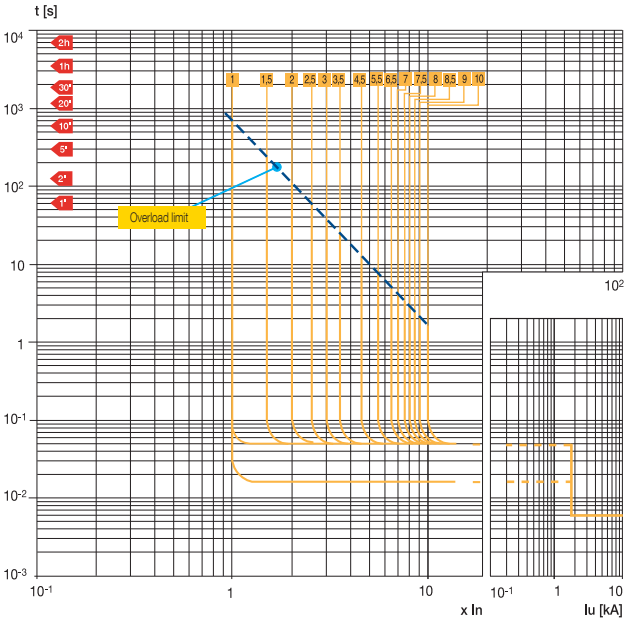


### T4 250 / T5 400/600 – PR221DS-I
#### I Function

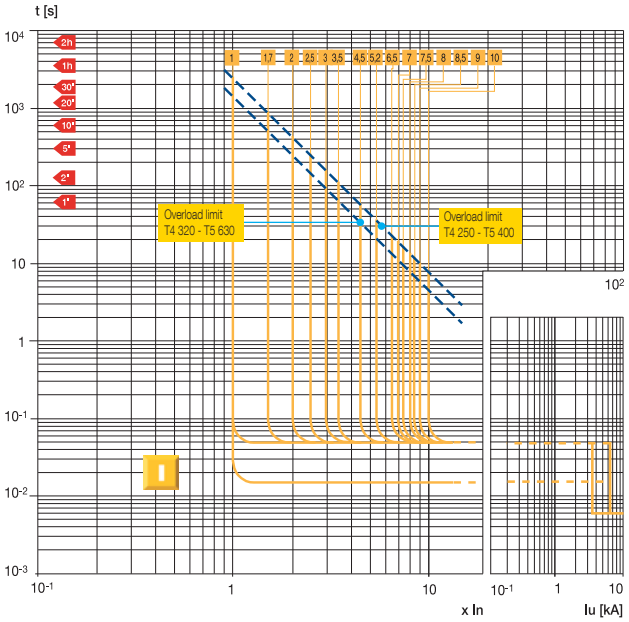


### T6 800 – PR221DS-I
#### I Function

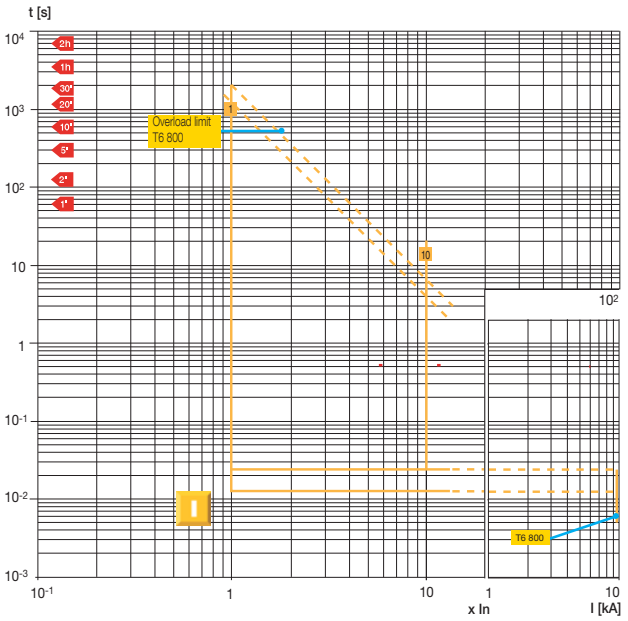


### T7 1000/1200 – PR231/P-I
#### I Function

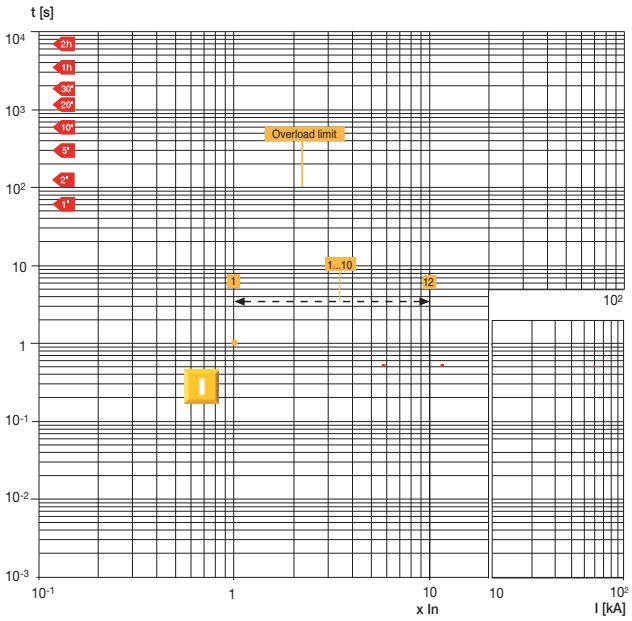

# Tmax molded case circuit breakers
## Curves and technical information

### Specific let-through energy curves (current limiting circuit breakers and T8)

### T2H PR221 100A
480 V

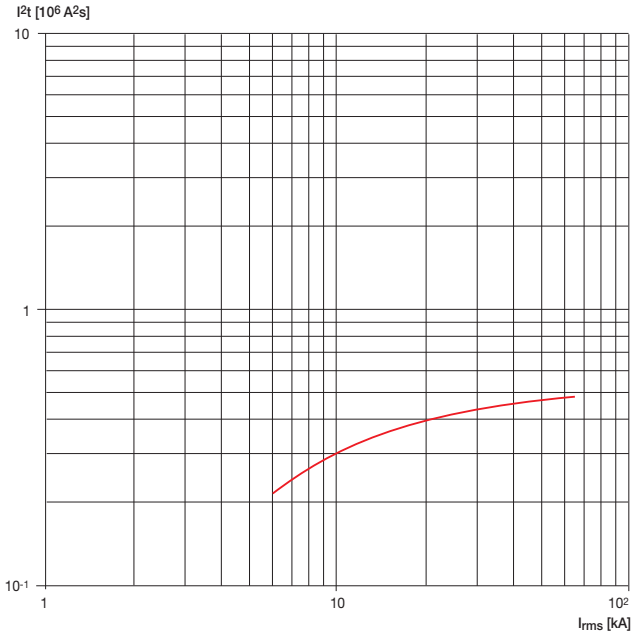


### T2H TM 100A
480 V

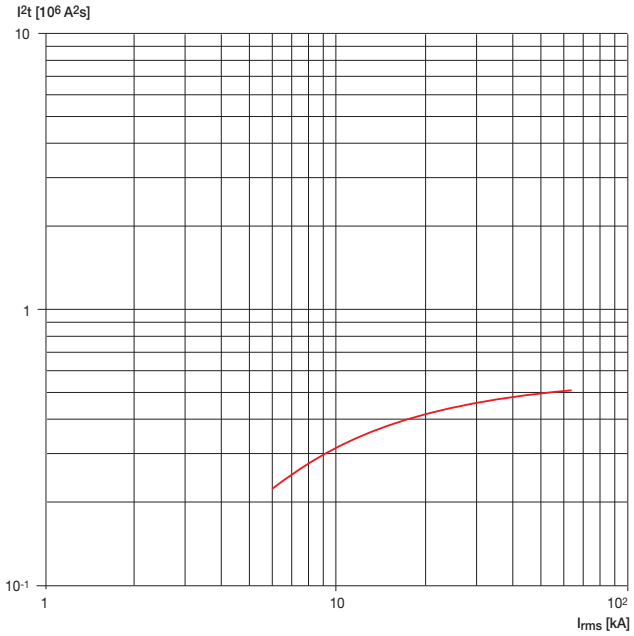


### T2H TM 50A
480 V

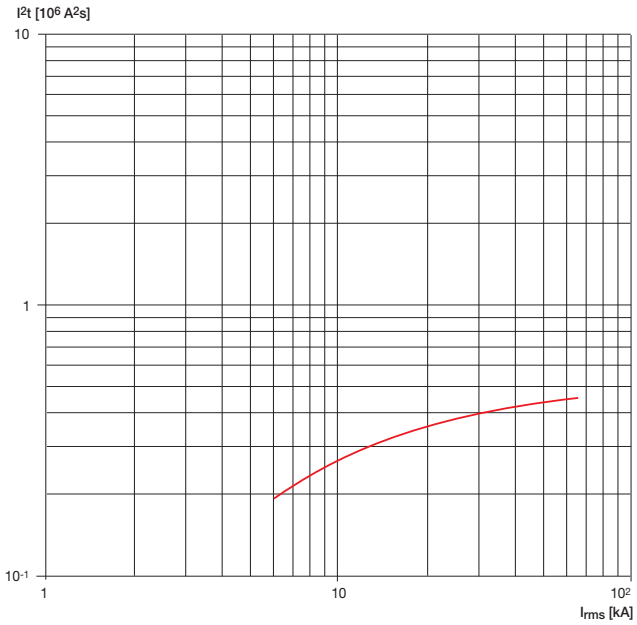


### T2H TM 30A
480 V

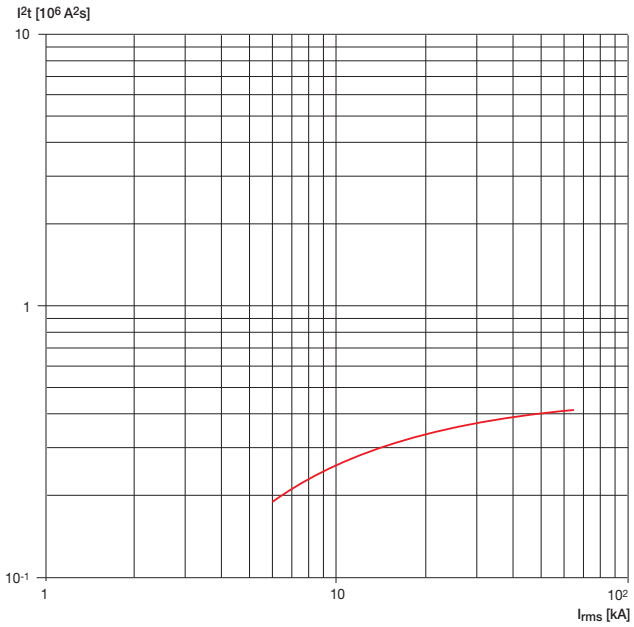

# Tmax molded case circuit breakers
## Curves and technical information

### T2H TM 15A
480 V

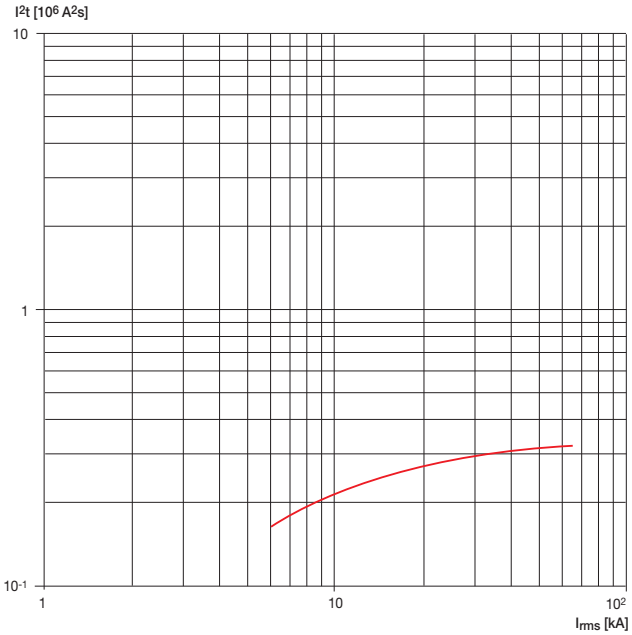


### T4H/V
480 V

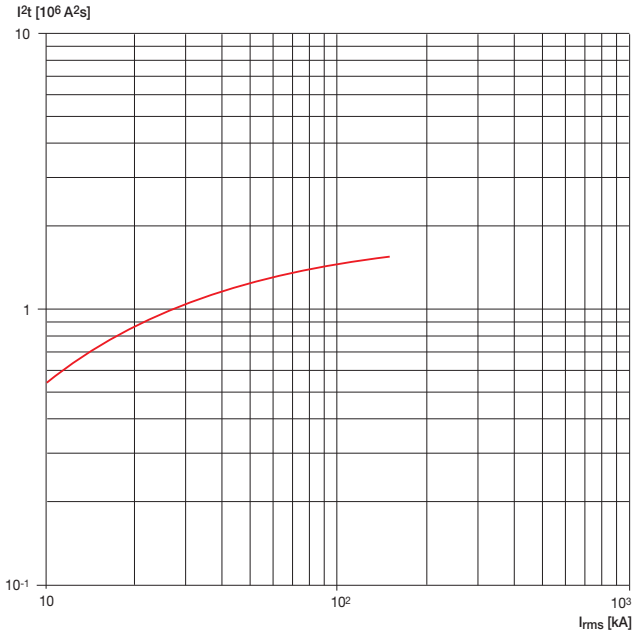


### T4H/V
600 V

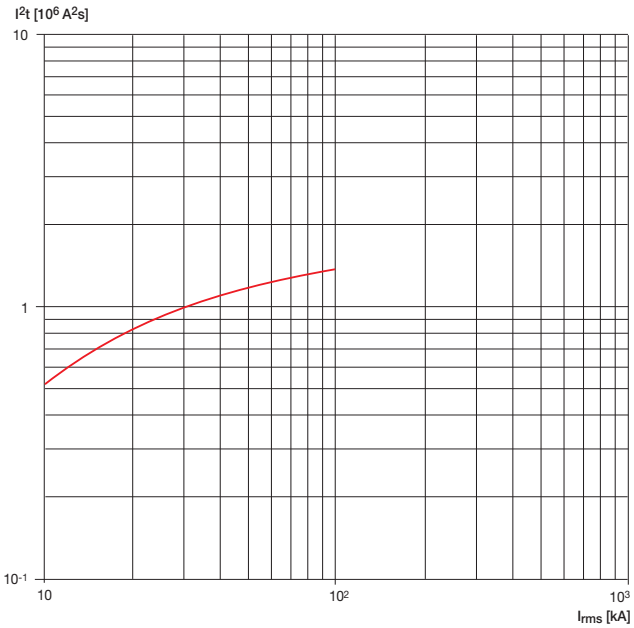


### T5H/V 400
480 V

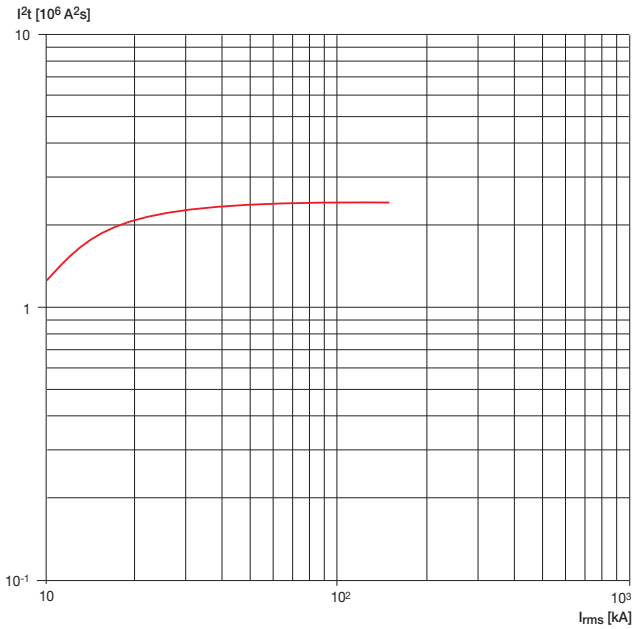

# Tmax molded case circuit breakers
## Curves and technical information

### T5H/V 400
600 V

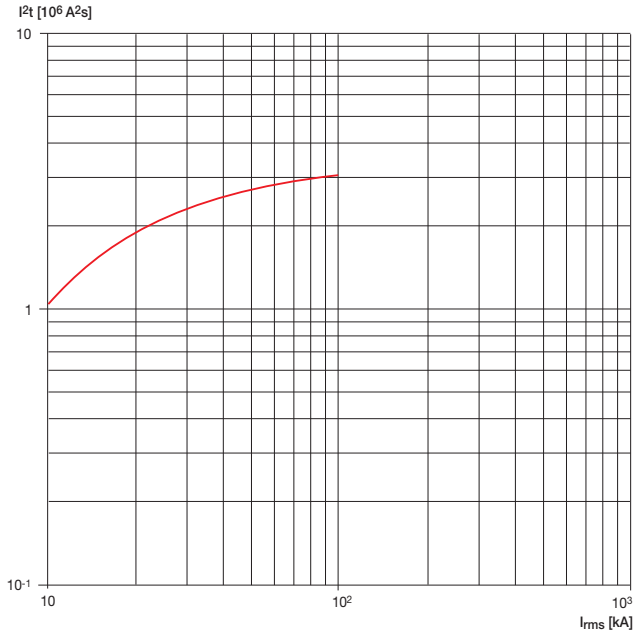


### T8
480 V

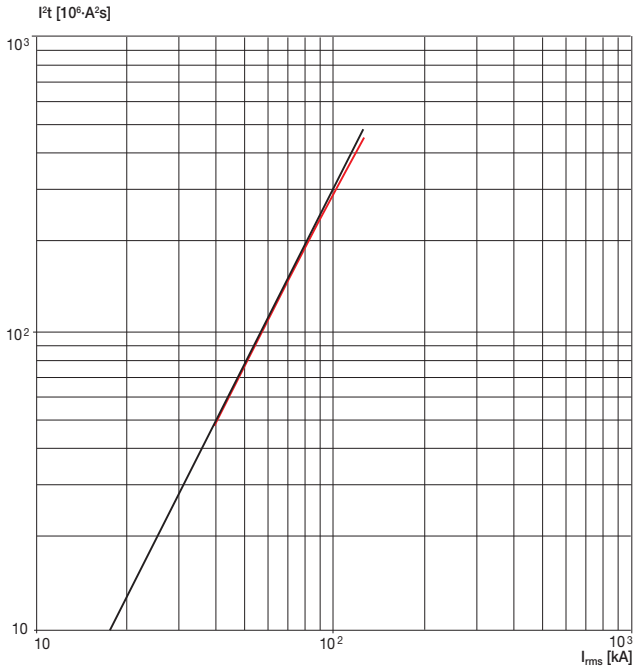


### T8
600 V

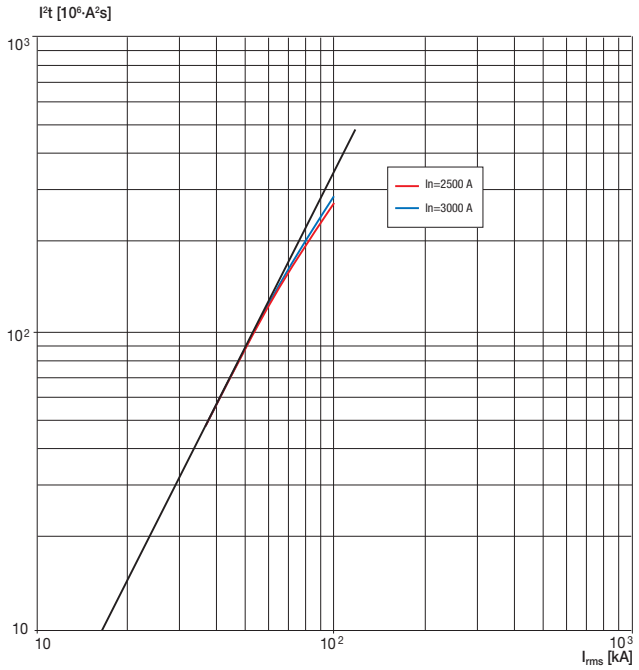

# Tmax molded case circuit breakers
## Curves and technical information

### Limitation curves
### (current limiting circuit breakers and T8)

#### T2H PR221 100A
480 V

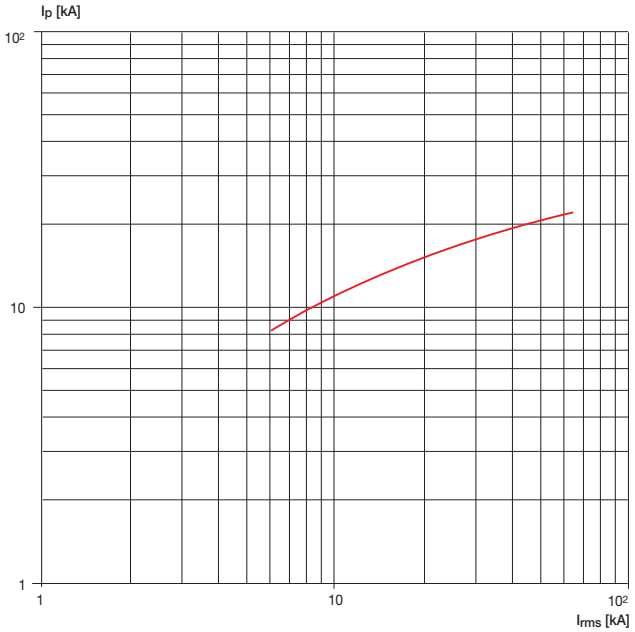


#### T2H TM 100A
480 V

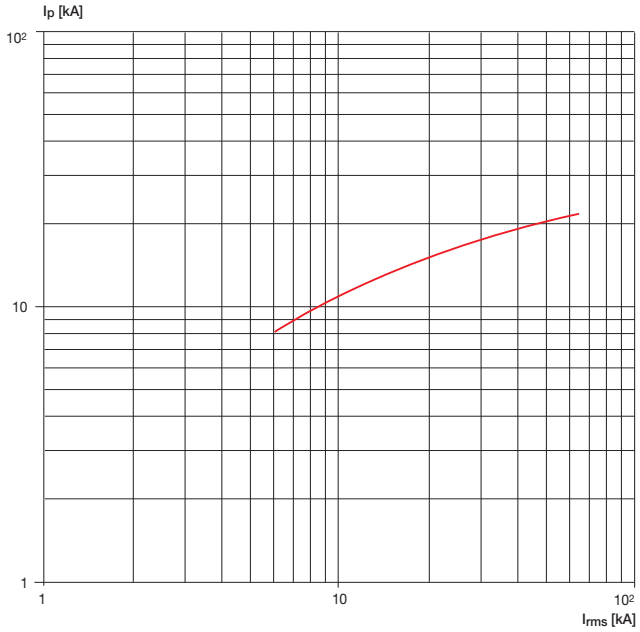


#### T2H TM 50A
480 V

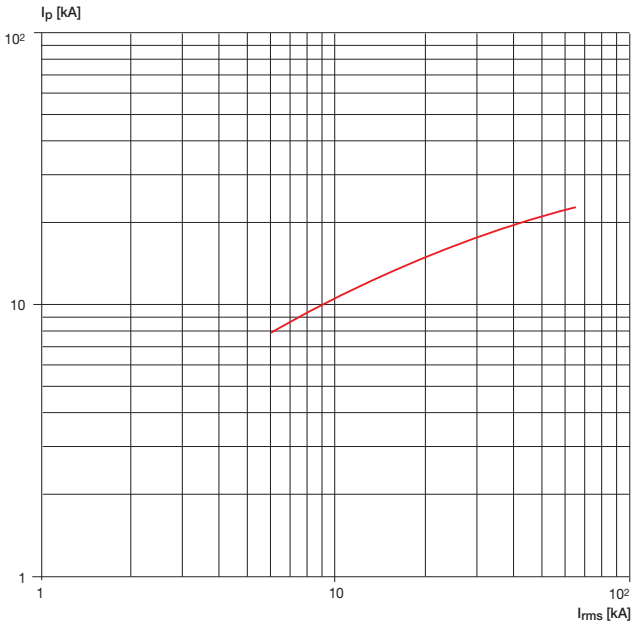


#### T2H TM 30A
480 V

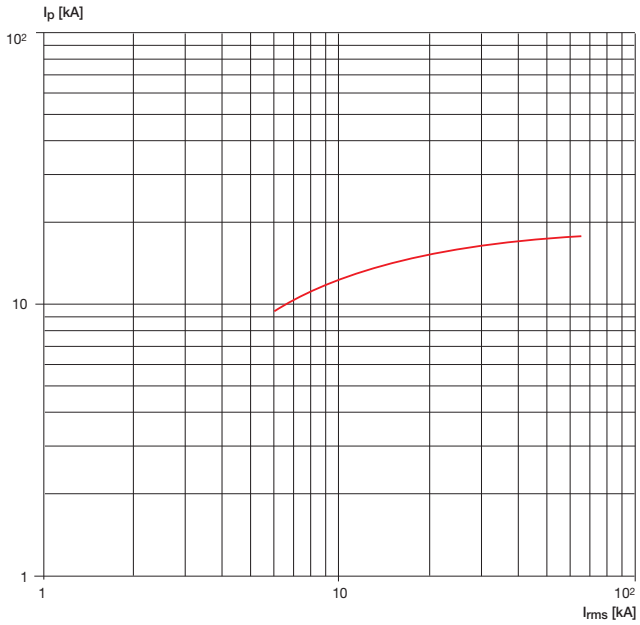

# Tmax molded case circuit breakers
## Curves and technical information

### T2H TM 15A
480 V

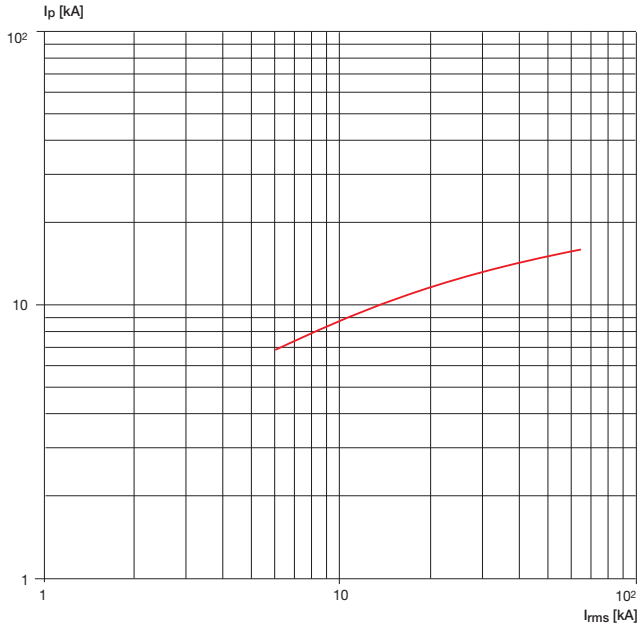


### T4H/V
480 V

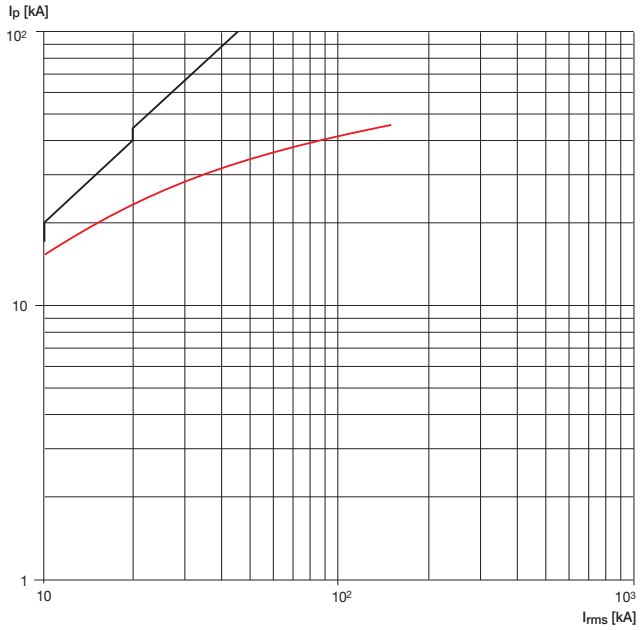


### T4H/V
600 V

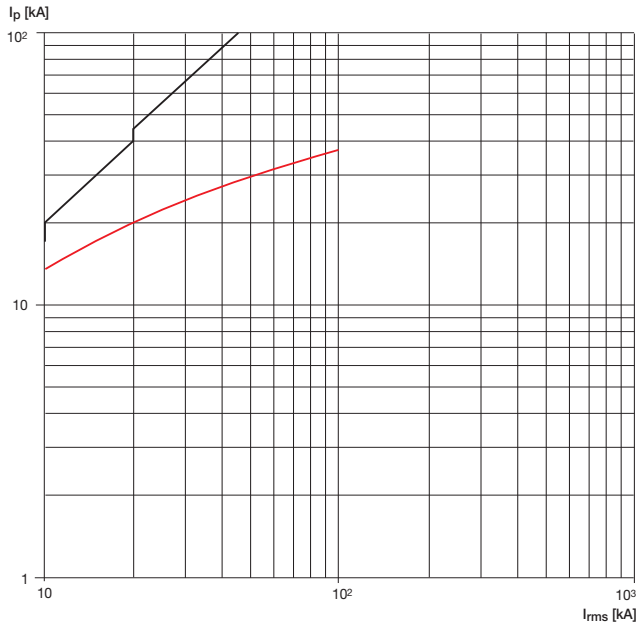


### T5H/V 400
480 V

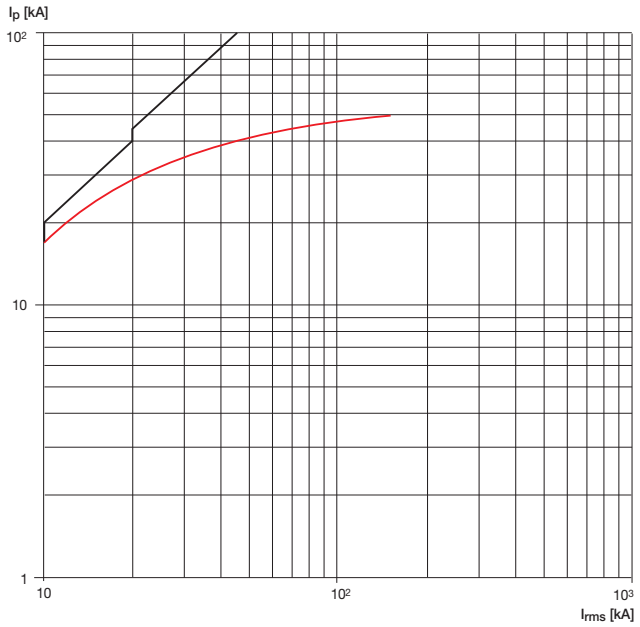

# Tmax molded case circuit breakers
## Curves and technical information

### T5H/V 400
**600 V**

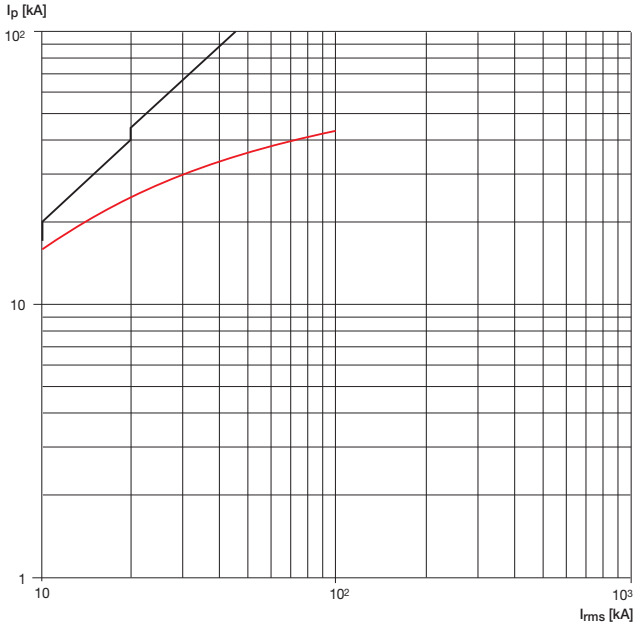


### T8
**480 V**

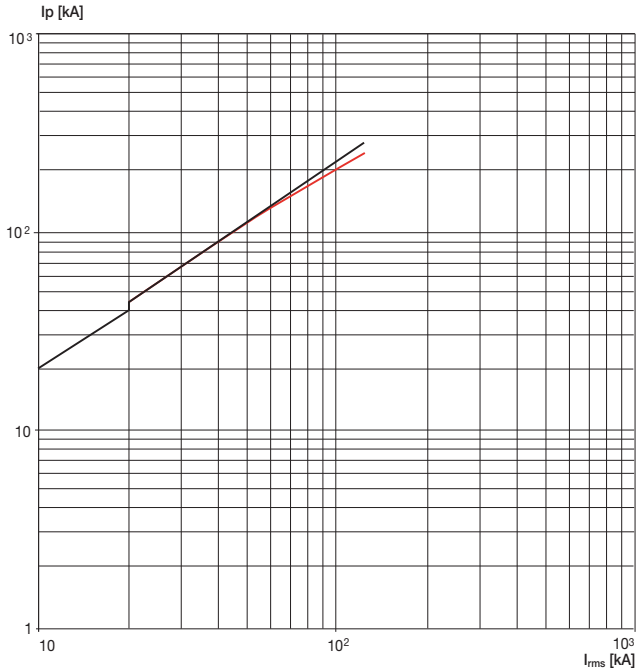


### T8
**600 V**

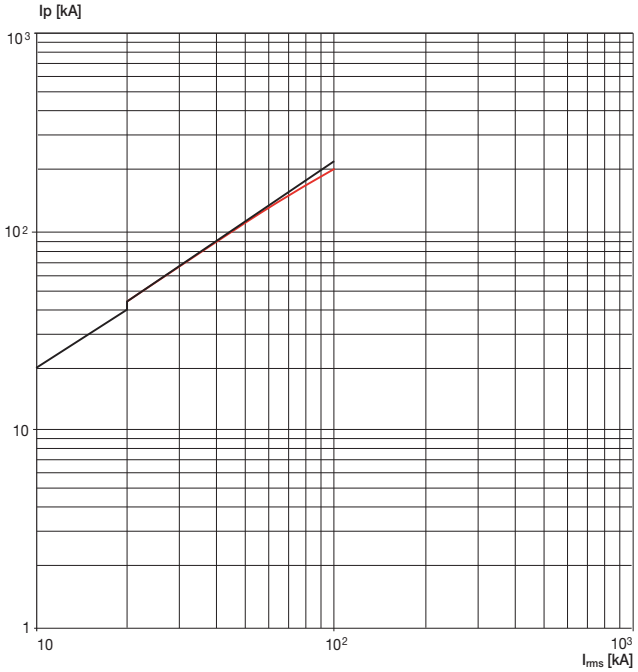

# Tmax molded case circuit breakers
## Curves and technical information

### Temperatre performances
### Circuit breakers with electronic trip units

**PR221DS**
**PR222DS/P**
**PR231/P**
**PR232/P**
**PR331/P**
**PR332/P**

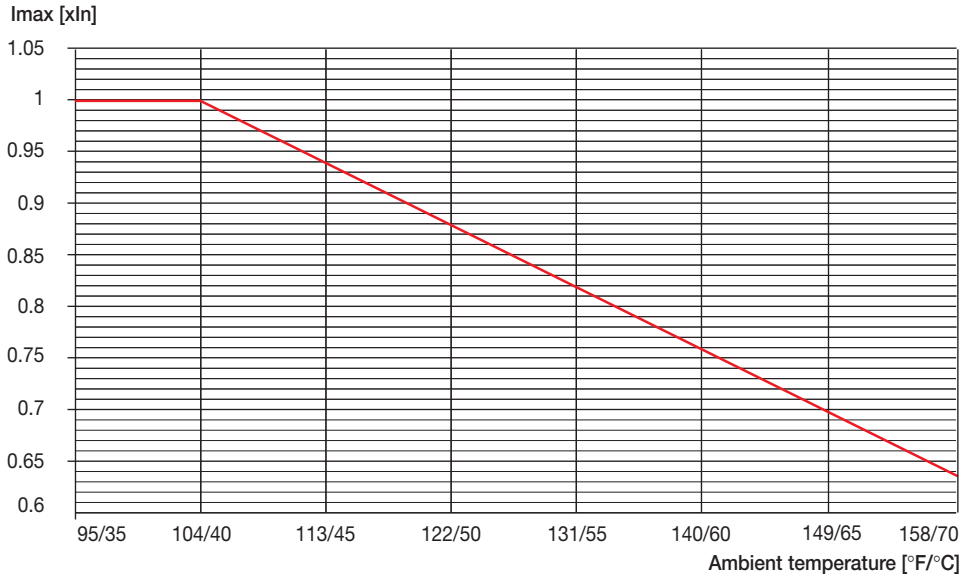

# Tmax molded case circuit breakers
# Curves and technical information

## Temperatre performances
## Circuit breakers with thermal magnetic trip units

### Tmax T1 and T1 1P

| In [A] | 50 °F / 10 °C | 68 °F / 20 °C | 86 °F / 30 °C | 104 °F / 40 °C | 122 °F / 50 °C | 140 °F / 60 °C |
|---|---|---|---|---|---|---|
| 15 | 18 | 17 | 16 | 15 | 14 | 13 |
| 20 | 24 | 22 | 21 | 20 | 19 | 17 |
| 25 | 29 | 28 | 27 | 25 | 23 | 22 |
| 30 | 35 | 34 | 32 | 30 | 28 | 26 |
| 40 | 47 | 45 | 43 | 40 | 37 | 34 |
| 50 | 60 | 57 | 53 | 50 | 46 | 42 |
| 60 | 71 | 68 | 64 | 60 | 56 | 51 |
| 70 | 83 | 79 | 75 | 70 | 65 | 60 |
| 80 | 94 | 90 | 85 | 80 | 75 | 69 |
| 90 | 106 | 101 | 96 | 90 | 84 | 78 |
| 100 | 121 | 114 | 107 | 100 | 92 | 84 |

### Tmax T2

| In [A] | 50 °F / 10 °C | 68 °F / 20 °C | 86 °F / 30 °C | 104 °F / 40 °C | 122 °F / 50 °C | 140 °F / 60 °C |
|---|---|---|---|---|---|---|
| 15 | 18 | 17 | 16 | 15 | 14 | 12 |
| 20 | 24 | 23 | 21 | 20 | 18 | 17 |
| 25 | 30 | 28 | 27 | 25 | 23 | 21 |
| 30 | 35 | 33 | 32 | 30 | 28 | 26 |
| 35 | 40 | 39 | 37 | 35 | 33 | 31 |
| 40 | 46 | 44 | 42 | 40 | 38 | 35 |
| 50 | 56 | 54 | 52 | 50 | 48 | 45 |
| 60 | 71 | 68 | 64 | 60 | 56 | 51 |
| 70 | 83 | 79 | 75 | 70 | 65 | 60 |
| 80 | 96 | 91 | 86 | 80 | 74 | 67 |
| 90 | 109 | 103 | 97 | 90 | 83 | 75 |
| 100 | 115 | 110 | 105 | 100 | 95 | 89 |

### Tmax T3

| In [A] | 50 °F / 10 °C | 68 °F / 20 °C | 86 °F / 30 °C | 104 °F / 40 °C | 122 °F / 50 °C | 140 °F / 60 °C |
|---|---|---|---|---|---|---|
| 60 | 70 | 67 | 64 | 60 | 56 | 52 |
| 70 | 82 | 78 | 74 | 70 | 66 | 61 |
| 80 | 92 | 88 | 84 | 80 | 75 | 71 |
| 90 | 104 | 100 | 95 | 90 | 85 | 79 |
| 100 | 117 | 112 | 106 | 100 | 94 | 87 |
| 125 | 145 | 139 | 132 | 125 | 118 | 110 |
| 150 | 175 | 167 | 159 | 150 | 141 | 131 |
| 175 | 205 | 195 | 185 | 175 | 164 | 152 |
| 200 | 236 | 224 | 213 | 200 | 187 | 172 |
| 225 | 264 | 251 | 239 | 225 | 211 | 195 |

# Tmax molded case circuit breakers
## Curves and technical information

### Tmax Ts3 150

| In [A] | 50 °F / 10 °C | 68 °F / 20 °C | 86 °F / 30 °C | 104 °F / 40 °C | 122 °F / 50 °C | 140 °F / 60 °C |
|---|---|---|---|---|---|---|
| 15 | 18 | 17 | 16 | 15 | 14 | 13 |
| 20 | 24 | 22 | 21 | 20 | 19 | 17 |
| 25 | 30 | 28 | 27 | 25 | 23 | 21 |
| 30 | 35 | 33 | 32 | 30 | 28 | 26 |
| 35 | 41 | 39 | 37 | 35 | 33 | 30 |
| 40 | 47 | 44 | 42 | 40 | 37 | 34 |
| 50 | 59 | 56 | 53 | 50 | 47 | 43 |
| 60 | 71 | 67 | 64 | 60 | 56 | 51 |
| 70 | 83 | 78 | 74 | 70 | 66 | 60 |
| 80 | 94 | 90 | 85 | 80 | 75 | 68 |
| 90 | 106 | 101 | 95 | 90 | 85 | 77 |
| 100 | 118 | 112 | 106 | 100 | 95 | 85 |
| 125 | 148 | 140 | 133 | 125 | 119 | 106 |
| 150 | 177 | 168 | 159 | 150 | 143 | 127 |

### Tmax Ts3 225

| In [A] | 50 °F / 10 °C | 68 °F / 20 °C | 86 °F / 30 °C | 104 °F / 40 °C | 122 °F / 50 °C | 140 °F / 60 °C |
|---|---|---|---|---|---|---|
| 175 | 207 | 196 | 186 | 175 | 166 | 149 |
| 200 | 236 | 224 | 212 | 200 | 190 | 170 |
| 225 | 266 | 252 | 239 | 225 | 214 | 191 |

### Tmax T4

| In [A] | 50 °F / 10 °C | 68 °F / 20 °C | 86 °F / 30 °C | 104 °F / 40 °C | 122 °F / 50 °C | 140 °F / 60 °C |
|---|---|---|---|---|---|---|
| 20 | 24 | 22 | 21 | 20 | 19 | 17 |
| 25 | 30 | 28 | 27 | 25 | 23 | 21 |
| 40 | 47 | 44 | 42 | 40 | 37 | 34 |
| 50 | 59 | 56 | 53 | 50 | 47 | 43 |
| 80 | 94 | 90 | 85 | 80 | 75 | 68 |
| 100 | 118 | 112 | 106 | 100 | 95 | 85 |
| 125 | 148 | 140 | 133 | 125 | 119 | 106 |
| 150 | 177 | 168 | 159 | 150 | 143 | 127 |
| 200 | 236 | 224 | 212 | 200 | 190 | 170 |
| 250 | 266 | 252 | 239 | 225 | 214 | 191 |

### Tmax T5 400/600

| In [A] | 50 °F / 10 °C | 68 °F / 20 °C | 86 °F / 30 °C | 104 °F / 40 °C | 122 °F / 50 °C | 140 °F / 60 °C |
|---|---|---|---|---|---|---|
| 300 | 241…345 | 230…328 | 220…314 | 210…300 | 200…286 | 187…267 |
| 400 | 325…465 | 310…442 | 295…420 | 280…400 | 265…380 | 250…355 |
| 600 | 483…690 | 459…656 | 440…628 | 420…600 | 400…572 | 374…534 |

### Tmax T6 800

| In [A] | 50 °F / 10 °C | 68 °F / 20 °C | 86 °F / 30 °C | 104 °F / 40 °C | 122 °F / 50 °C | 140 °F / 60 °C |
|---|---|---|---|---|---|---|
| 600 | 520…740 | 493…705 | 462…660 | 441…630 | 405…580 | 380…540 |
| 800 | 685…965 | 640…905 | 605…855 | 560…800 | 520…740 | 470…670 |

# Tmax molded case circuit breakers
# Curves and technical information

## Power losses

| Type | Trip unit | In [A] | P [W/pole] |
|---|---|---|---|
| T1 - T1B 1p | TMF | 15 | 1.3 |
| | | 20 | 1.3 |
| | | 25 | 2.0 |
| | | 30 | 1.8 |
| | | 40 | 2.6 |
| | | 50 | 3.7 |
| | | 60 | 3.9 |
| | | 70 | 5.3 |
| | | 80 | 4.8 |
| | | 90 | 6.1 |
| | | 100 | 6.8 |
| T2 | TMF | 15 | 1.0 |
| | | 20 | 1.7 |
| | | 25 | 1.6 |
| | | 30 | 2.4 |
| | | 35 | 3.0 |
| | | 40 | 2.8 |
| | | 50 | 3.2 |
| | | 60 | 4.6 |
| | | 70 | 4.7 |
| | | 80 | 5.4 |
| | | 90 | 6.9 |
| | | 100 | 7.7 |
| | ELT | 10 | 0.5 |
| | | 25 | 1.0 |
| | | 63 | 3.5 |
| | | 100 | 8.0 |
| T3 | TMF | 60 | 3.9 |
| | | 70 | 4.2 |
| | | 80 | 4.8 |
| | | 90 | 5.0 |
| | | 100 | 5.3 |
| | | 125 | 6.6 |
| | | 150 | 7.4 |
| | | 175 | 11.6 |
| | | 200 | 13.2 |
| | | 225 | 15.0 |
| Ts3 | TMF | 15 | 3.2 |
| | | 20 | 3.2 |
| | | 25 | 3.3 |
| | | 30 | 3.5 |
| | | 35 | 4.8 |
| | | 40 | 6.3 |
| | | 50 | 5.3 |
| | | 60 | 7.7 |
| | | 70 | 4.6 |
| | | 80 | 6.0 |
| | | 90 | 7.6 |
| | | 100 | 7.0 |
| | | 125 | 6.7 |
| | | 150 | 8.8 |
| | | 175 | 9.2 |
| | | 200 | 12.0 |
| | | 225 | 13.5 |

# Tmax molded case circuit breakers
## Curves and technical information

| Type | Trip unit | In [A] | P [W/pole] |
|---|---|---|---|
| T4 | TMF | 15 | 3.6 |
| | | 20 | 3.6 |
| | TMD | 30 | 3.6 |
| | | 40 | 3.8 |
| | | 50 | 3.9 |
| | TMA | 80 | 4.6 |
| | | 100 | 5.2 |
| | | 125 | 5.7 |
| | | 150 | 6.9 |
| | | 200 | 9.9 |
| | | 250 | 13.7 |
| | ELT | 100 | 1.7 |
| | | 150 | 3.9 |
| | | 200 | 10.7 |
| T5 | TMA | 300 | 12.3 |
| | | 400 | 19.5 |
| | | 600 | 40.1 |
| | ELT | 300 | 9.3 |
| | | 400 | 16.5 |
| | | 600 | 37.1 |
| T6 | TMA | 600 | 30.6 |
| | | 800 | 31 |
| | ELT | 600 | 30 |
| | | 800 | 32 |
| T7 | ELT | 400 | 5 |
| | | 600 | 12 |
| | | 800 | 19.3 |
| | | 1000 | 30 |
| | | 1200 | 47 |
| T8 | ELT | 1600 | 30 |
| | | 2000 | 46 |
| | | 2500 | 73 |
| | | 3000 | 117 |

## Wiring possibilities in DC applications

### Use of direct current apparatus

To obtain the number of poles in series needed to guarantee the required breaking capacity at the various operating voltages, suitable connection diagrams must be used. For the breaking capacity (Icu), according to the voltage and the number of poles connected in series with reference to the connection diagrams, please refer to the main characteristic table in the first section of this catalog

### Diagram A: Interruption with one pole for polarity

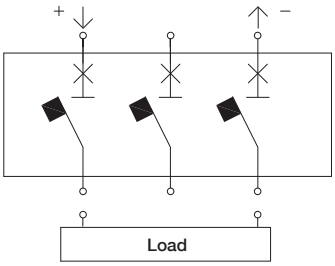


Note: With negative polarity not connected to earth, the installation method must be such as to make the probability of a second earth fault nil.

### Diagram B: Interruption with two poles in series for one polarity and one pole for the other polarity

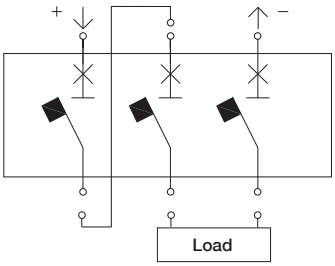


Note: With negative polarity not connected to earth, the installation method must be such as to make the probability of a second earth fault nil.

### Diagram C: Interruption with three poles in series for polarity

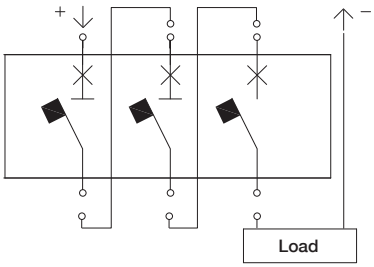

## Diagram D: Interruption with four poles in series for one polarity (for use at 1000 V DC) IEC

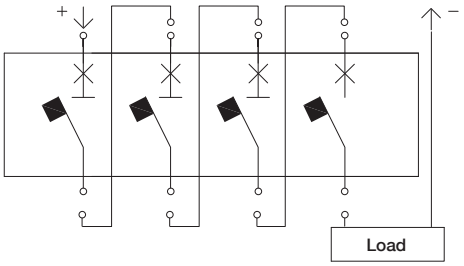


## Diagram E: Interruption with three poles in series on one polarity and one pole on the remaining polarity

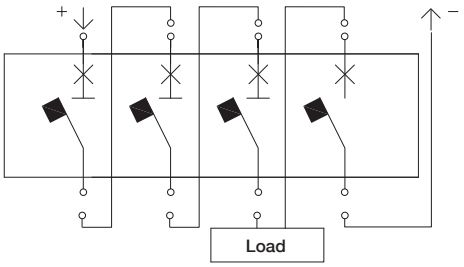


Note: With negative polarity not connected to earth, the installation method must be such as to make the probability of a second earth fault nil.

## Diagram F: Interruption with two poles in series for polarity

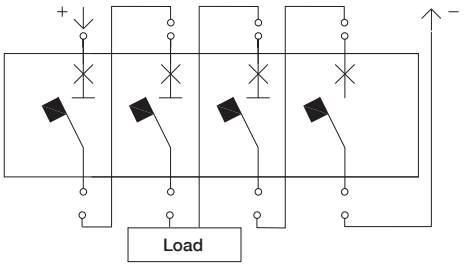


Note: With negative polarity not connected to earth, the installation method must be such as to make the probability of a second earth fault nil.

# Table of contents
## Wiring diagrams

# Tmax molded case circuit breakers
# Wiring diagrams

## Information for reading - Circuit-breakers T1...T6

### State of operation represented

The diagram is shown in the following conditions:
- plug-in version circuit-breaker open and racked-in
- contactor for motor starting open
- circuits de-energised
- trip units not tripped
- motor operator with springs charged.

### Version

The diagram shows a circuit-breaker or switch-disconnector in the plug-in version (only T2, T3, T4 and T5) or in the withdrawable version (T6). The diagram is also valid for the fixed and withdrawable version circuit-breakers or switch-disconnectors.
With the fixed version circuit-breakers or switch-disconnectors, the applications indicated in figures 26-27-28-29-30-31 and 32 cannot be provided.

### Caption

| | | |
|---|---|---|
| □ | = | Figure number of the diagram |
| * | = | See note indicated by the letter |
| A1 | = | Circuit-breaker applications |
| A11 | = | FDU interfacing unit (front display) |
| A12 | = | AUX-E type signalling unit, with auxiliary relays for electrical signalling of circuit-breaker open and circuit-breaker tripped |
| A13 | = | PR021/K type signalling unit, with auxiliary relays for electrical signalling of the protection functions of electronic trip unit |
| A14 | = | MOE-E type actuation unit, with auxiliary relays for carrying out the commands coming from the dialogue unit |
| A15 | = | PR212/CI type contactor control unit for motor starting |
| A16 | = | Solenoid operating mechanism |
| A17 | = | Unit for M motor electrical latching |
| A18 | = | VM210 type voltage measuring unit |
| A2 | = | Applications of the solenoid operator or motor operator |
| A3 | = | Applications of the RC221, RC222 or RC223 type residual current release |
| A4 | = | Indication apparatus and connections for control and signalling, outside the circuit-breaker |
| D | = | Electronic time-delay device of the undervoltage release (outside the circuit-breaker) |
| H, H1 | = | Signalling lamps |
| K | = | Contactor for motor starting |
| K51 | = | Electronic trip unit:<br>– PR221 type overcurrent release, with the following protection functions:<br>- L against overload with inverse long time delay<br>- S against short-circuit with inverse or definite short time delay<br>- I against short-circuit with instantaneous trip<br>– PR222DS/P, PR222DS/PD-A, type overcurrent release, with the following protection functions:<br>- L against overload with inverse long time delay<br>- S against short-circuit with inverse or definite short time delay<br>- I against short-circuit with instantaneous trip time<br>- G against earth fault with short time trip<br>– PR222MP motor protection type trip unit, with the following protection functions:<br>- against overload (thermal protection)<br>- against rotor block<br>- against short-circuit<br>- against missing or unbalanced current between the phases |
| K51/1…8 | = | Contact for electrical signalling of the protection functions of the electronic trip unit |
| K87 | = | RC221, RC222 or RC223 type residual current trip unit |

## Caption (continued)

| | | |
|---|---|---|
| M | = | Motor for circuit-breaker opening and circuit-breaker closing spring charging |
| M1 | = | Three-phase asynchronous motor |
| Q | = | Main circuit-breaker |
| Q/0,1,2,3 | = | Auxiliary circuit-breaker contacts |
| R | = | Resistor (see note F) |
| R1 | = | Motor thermistor |
| R2 | = | Thermistor in the motor operator |
| S1, S2 | = | Contacts controlled by the cam of the motor operator |
| S3, S3/1 | = | Change-over contact for electrical signalling of local/remote selector status |
| S4/1-2 | = | Contacts activated by the circuit-breaker rotary handle (see note C) |
| S51/S | = | Contact for electrical signalling of overload in progress (start) |
| S75I/1…3 | = | Contacts for electrical signalling of circuit-breaker in racked-in position (only provided with circuit-breakers in plug-in and withdrawable version) |
| S75S/1…3 | = | Contacts for electrical signalling of circuit-breaker in racked-out position (onlyprovided with circuit-breakers in plug-in and withdrawable version) |
| S87/1 | = | Contact for electrical signalling of RC222 or RC223 type residual current release pre-alarm |
| S87/2 | = | Contact for electrical signalling of RC222 Change-over contact for electrical signalling of local/remote selector status type residual current release alarm |
| S87/3 | = | Contact for electrical signalling of circuit-breaker open due to RC221, RC222 or RC223 type residual current release trip |
| SC | = | Pushbutton or contact for closing the circuit-breaker |
| SC3 | = | Pushbutton for motor starting |
| SD | = | Switch-disconnector of the power supply of the RC221 or RC222 type residual current release |
| SO | = | Pushbutton or contact for opening the circuit-breaker |
| SO1, SO2 | = | Pushbuttons or contacts for the circuit-breaker opening (see Resetting instructions for circuit-breaker tripped by trip units) |
| SO3 | = | Pushbutton for stopping the motor |
| SQ | = | Contact for electrical signalling of circuit-breaker open |
| SY | = | Contact for electrical signalling of circuit-breaker open due to YO, YO1, YO2 or YU thermomagnetic trip unit intervention (tripped position) |
| TI | = | Toroidal current transformer |
| TI/L1 | = | Current transformer placed on phase L1 |
| TI/L2 | = | Current transformer placed on phase L2 |
| TI/L3 | = | Current transformer placed on phase L3 |
| TI/N | = | Current transformer placed on the neutral |
| W1 | = | Serial interface with the control system (EIA RS485 interface. See note D) |
| X1,X2,X5…X9 | = | Connectors for the circuit-breaker auxiliary circuits (in the case of circuit-breakers in plug-in version, removal of the connectors takes place simultaneously with that of the circuit-breaker. See note E) |
| X11 | = | Back-up terminal box |
| X3,X4 | = | Connectors for the circuits of the electronic trip unit (in the case of circuit-breakers in the plug-in version, remo val of the connectors takes place simultaneously with that of the circuit-breaker) |
| XA | = | Interfacing connector of the PR222DS/P, PR222DS/PD-A trip unit |
| XA1 | = | Three-way connector for YO/YU (see note E) |
| XA10 | = | Six-way connector for solenoid operator |
| XA2 | = | Twelve-way connector for auxiliary contacts (see note E) |
| XA5 | = | Three-way connector for contact of electrical signalling of circuit-breaker open due to trip of the RC221, RC222 or RC223 type residual current release (see note E) |
| XA6 | = | Three-way connector for contact of electrical signalling of circuit-breaker open due to trip of the overcurrent release (see note E) |
| XA7 | = | Six-way connector for auxiliary contacts (see note E) |
| XA8 | = | Six-way connector for contacts operated by the rotary handle or for the motor operator (see note E) |
| XA9 | = | Six-way connector for the electrical signalling of RC222 or RC223 type residual current release pre-alarm and alarm and for opening by means of the release itself (see note E) |

## Caption (continued)

| | | |
|---|---|---|
| XB,XC,XE | = | Interfacing connectors of the AUX-E unit |
| XD | = | Interfacing connector of the FDU unit |
| XF | = | Interfacing connector of the MOE-E unit |
| X0 | = | Connector for the YO1 trip coil |
| X01 | = | Connector for the YO2 trip coil |
| XV | = | Terminal boxes of the applications |
| YC | = | Closing release of the motor operating mechanism |
| YO | = | Opening release |
| YO1 | = | Trip coil of the electronic trip unit |
| YO2 | = | Trip coil of the RC221, RC222 or RC223 type residual current release |
| YO3 | = | Shunt opening release of the solenoid operator |
| YU | = | Undervoltage release (see note B). |

## Description of figures (seen on top right corner of each wiring diagrams)

| | | |
|---|---|---|
| Fig. 1 | = | Opening release. |
| Fig. 2 | = | Permanent opening release. |
| Fig. 3 | = | Instantaneous undervoltage release (see note B and F). |
| Fig. 4 | = | Undervoltage release with electronic time-delay device outside the circuit-breaker (see note B). |
| Fig. 5 | = | Instantaneous undervoltage release in version for machine tools with one contact in series (see note B, C, and F). |
| Fig. 6 | = | Instantaneous undervoltage release in version for machine tools with two contacts in series (see note B, C, and F). |
| Fig. 7 | = | One changeover contact for electrical signalling of circuit-breaker open due to RC221, RC222 or RC223 type residual current release trip. |
| Fig. 8 | = | RC222 or RC223 type residual current release circuits. |
| Fig. 9 | = | Two electrical signalling contacts for RC222 or RC223 type residual current release pre-alarm and alarm. |
| Fig. 10 | = | Solenoid operator. |
| Fig. 11 | = | Stored energy motor operator. |
| Fig. 12 | = | Local/remote auxiliary contact for stored-energy motor operating mechanism. |
| Fig. 21 | = | Three changeover contacts for electrical signalling of circuit-breaker open or closed and one changeover contact for electrical signalling of circuit-breaker open due to YO, YO1, YO2 and YU thermomagnetic trip unit intervention (tripped position). |
| Fig. 22 | = | One changeover contact for electrical signalling of circuit-breaker open or closed and a changeover contact for electrical signalling of circuit-breaker open due to YO, YO1, YO2 or YU the thermomagnetic trip unit intervention (tripped position). |
| Fig. 23 | = | Two changeover contacts for electrical signalling of circuit-breaker open or closed. |
| Fig. 24 | = | One changeover contact for electrical signalling of circuit-breaker open due to overcurrent release trip (T2). |
| Fig. 25 | = | One contact for electrical signalling of circuit-breaker open due to overcurrent release trip (T4-T5-T6). |
| Fig. 26 | = | First position of circuit-breaker changeover contact, for electrical signalling of racked-in. |
| Fig. 27 | = | Second position of circuit-breaker changeover contact, for electrical signalling of racked-in. |
| Fig. 28 | = | Third position of circuit-breaker changeover contact, for electrical signalling of racked-in. |
| Fig. 29 | = | First position of circuit-breaker changeover contact, for electrical signalling of isolated. |
| Fig. 30 | = | Second position of circuit-breaker changeover contact, for electrical signalling of isolated. |
| Fig. 31 | = | Third position of circuit-breaker changeover contact, for electrical signalling of isolated. |
| Fig. 32 | = | Circuit of the current transformer on neutral conductor outside the circuit-breaker (for plug-in and withdrawable version circuit-breaker). |
| Fig. 41 | = | Auxiliary circuits of the PR222DS/P, PR222DS/PD-A electronic trip unit connected with FDU front display unit. |
| Fig. 42 | = | Auxiliary circuits of the PR222DS/PD-A, electronic trip unit connected with PR021/K type signalling unit. |
| Fig. 43 | = | Auxiliary circuits of the PR222DS/PD-A, electronic trip unit connected with FDU front display unit and with PR021/K type signalling unit. |
| Fig. 44 | = | Auxiliary circuits of the PR222DS/PD-A, electronic trip unit connected with the AUX-E auxiliary cotacts. |
| Fig. 45 | = | Auxiliary circuits of the PR222DS/PD-A, electronic trip unit connected with the auxiliary contacts AUX-E and with MOE-E type actuation unit. |
| Fig. 46 | = | Auxiliary circuits of the PR222DS/PD-A, electronic trip unit connected with FDU front display unit and with the AUX-E auxiliary contacts. |

# Tmax molded case circuit breakers
## Wiring diagrams

### Incompatibility

The circuits indicated by the following figures cannot be supplied at the same time on the same circuit-breaker:
1 - 2 - 3 - 4 - 5 - 6
5 - 6 - 11
10 - 11 - 45
10 - 12
21 - 22 - 23 - 44 - 45 - 46
24 - 25
26 - 32
41 - 42 - 43 - 44 - 45 - 46

### Notes

A) The circuit-breaker is only fitted with the applications specified in the ABB SACE order confirmation. To make out the order, please consult this catalogue.

B) The undervoltage release is supplied for power supply branched on the supply side of the circuit-breaker or from an independent source: circuit-breaker closing is only allowed with the release energised (the lock on closing is made mechanically).

C) The S4/1 and S4/2 contacts shown in figures 5-6 open the circuit with the circuit-breaker open and close it again when a manual closing command is given by means of the rotary handle, in accordance with the Standards regarding machine tools (in any case, closing does not take place if the undervoltage release is not supplied).

E) Connectors XA1, XA2, XA5, XA6, XA7, XA8 and XA9 are supplied on request. They are always supplied with T2 and T3 circuit-breakers in the plug-in version, and with T4 and T5 circuit-breakers in the plug-in version equipped with unwired electronic accessories.
Connectors X1, X2, X5, X6, X7, X8 and X9 are supplied on request. They are always supplied with T4, T5 and T6 circuit-breakers in the fixed version or in the withdrawable version equipped with unwired electronic accessories.

F) Additional external resistor for undervoltage release supplied at 250 V DC, 380/440 V AC and 480/500 V AC.

G) In the case of fixed version circuit-breaker with current transformer on external neutral conductor outside the circuit-breaker, when the circuit-breaker is to be removed, it is necessary to short-circuit the terminals of the TI/N transformer.

H) SQ and SY contacts of AUX-E signalling unit are opto-isolated contacts.

I) The connection to poles 3-4 of X4 connector can be used in two ways: connecting a generic digital input or connecting the motor thermistor. The two functions are alternative.

# Tmax molded case circuit breakers
# Wiring diagrams

## Information for reading - Circuit-breaker Ts3

### Versions

The diagram indincates a circuit breaker or an isolating-switch in draw out or plug-in version but it may be applied to a circuit breaker or an isolating-switch in fixed version too.
Circuit given in figures 21-22-31-32 cannot be supplied with circuit breakers or isolating-switch in fixed version.

### Caption

| | | |
|---|---|---|
| □ | = | Figure number of the diagram |
| * | = | See note indicated by the letter |
| A1 | = | Circuit-breaker accessories |
| A2 | = | Motor operator accessories |
| A4 | = | Indication apparatus and connections for control and signalling, outside the circuit-breaker |
| D | = | Electronic time-delay device of the undervoltage release (outside the circuit-breaker) |
| K87 | = | Signalling lamps |
| K O | = | Contactor for motor starting |
| M | = | Motor with series energization for the circuit breaker opening and closing |
| Q | = | Main circuit breaker |
| Q/D...2 | = | Circuit breaker auxiliary contacts |
| R | = | Resistance external to the circuit breaker, supplied for motor supply voltage higher than 220V |
| S1 | = | Position contact operated by a cam of the circuit breaker |
| S2 | = | Safety contact operated by key lock (if provided) or padlock device |
| S4 | = | Contact operated by the circuit breaker rotary handle (see note C) |
| S75I/1-2 | = | Contacts signalling circuit breaker in the connected position (provided with the circuit breaker in draw out or plug-in version only (see note D) |
| S75S/1-2 | = | Contacts signalling circuit breaker in the isolated or plugged-in position (provided with the circuit breaker in draw out or plug-in version only (see note D) |
| SC | = | Pushbutton or contact for circuit breaker closing, the operation shall last for 100 ms at least. |
| SO | = | Pushbutton or contact for circuit breaker opening |
| SO1,SO2 | = | Pushbutton or contact for circuit breaker opening, the operation shall last for 100 ms at least (see instructions for resetting the circuit breaker after the releases has tripped) |
| SY | = | Contact signalling circuit breaker tripped through thermomagnetic, YO, YO1, YO2, YU releases operation (bell alarm) |
| TI | = | Ring current transformer |
| X1,X2 | = | Connectors for the circuit breaker auxiliary circuits |
| XV | = | Terminal boards of the accessories |
| YO | = | Shunt trip |
| YO1 | = | Opening solenoid of the RC211 or RC212 type residual current release |
| YO2 | = | Shunt trip for permanent supply |
| YU | = | Undervoltage release (see note B) |

# Tmax molded case circuit breakers
## Wiring diagrams

### Description of figures (seen on top right corner of each wiring diagrams)

| | | |
|---|---|---|
| Fig. 1 | = | Shunt trip. |
| Fig. 2 | = | Opening solenoid of the RC211 type residual current release. |
| Fig. 3 | = | Opening solenoid of the RC212 type residual current release. |
| Fig. 4 | = | Instantaneous undervoltage release (see note B) |
| Fig. 5 | = | Instantaneous undervoltage release in version for machine tools (see note B and C). |
| Fig. 6 | = | Undervoltage release with solid-state time-delaying device external to the circuit breaker (see note B). |
| Fig. 7 | = | Direct acting motor operator |
| Fig. 8 | = | Shunt trip for permanent supply. |
| Fig. 11 | = | Two change-over contacts signalling circuit breaker on/off. |
| Fig. 12 | = | One change-over contact signalling circuit breaker on/off and one change-over contact signalling circuit breaker tripped through thermomagnetic YO, YO1, YO2, YU releases operation (bell alarm). |
| Fig. 21 | = | First circuit breaker position contact, signalling the connected position (see note D). |
| Fig. 22 | = | Second circuit breaker position contact signalling the connected position (see note D). |
| Fig. 31 | = | First circuit breaker position contact signalling isolated or plugged-out position (see note D). |
| Fig. 32 | = | Second circuit breaker position contact signalling isolated or plugged-out position (see note D). |

### Incompatibility

The circuits indicated by the following figures cannot be supplied at the same time on the same circuit-breaker:
2 - 3
1 - 4 - 5 - 6 - 7 - 8
11 - 12
21 - 31
22 - 32

### Notes

A) Circuit breaker is delivered complete with the accessories listed in the ABB order acknowledgement only..
B) Undervoltage release is suitable for circuit breaker supply side feeding or for feeding from an independen source: circuit breaker closes only if the undervoltage release is energized (lock on closing is achieved mechanically).
C) Contact S4 given in fig. 5 opens the circuit when the circuit breaker is open and it closes when a manual closing control is carried out through rotary handle, in compiance with the Standards relevant to the machine tools (the closing does not occur indeed if the undervoltage release is not energized).
D) Circuit breaker can be equipped with S75I and S75S position contacts, in whatever combination, with a maximum of 2 contacts.

# Tmax molded case circuit breakers
# Wiring diagrams

## Information for reading - Circuit-breaker T7

### Warning

Before installing the circuit-breaker, carefully read notes F and O on the circuit diagrams.

### Operating status shown

The circuit diagram is for the following conditions:
- withdrawable circuit-breaker, open and racked-in
- circuits de-energised
- releases not tripped
- motor operating mechanism with springs discharged.

### Versions

Though the diagram shows a circuit-breaker in withdrawable version, it can be applied to a fixed version circuit-breaker as well.

**Fixed version**
The control circuits are fitted between terminals XV (connectors X12-X13-X14-X15 are not supplied). With this version, the applications indicated in figure 31A cannot be provided.

**Withdrawable version**
The control circuits are fitted between the poles of connectors X12-X13-X14-X15 (terminal box XV is not supplied).

**Version without overcurrent release**
With this version, the applications indicated in figures 13A, 14A, 41A, 42A, 43A, 44A, 45A, 62A cannot be provided.

**Version with PR231/P or PR232/P electronic trip unit**
With this version, the applications indicated in figures 41A, 42A, 43A, 44A, 45A, 62A cannot be provided.

**Version with PR331/P electronic trip unit**
With this version, the applications indicated in figures 42A, 43A, 44A, 45A cannot be provided.

**Version with PR332/P electronic trip unit**
With this version, the applications indicated in figure 41A cannot be provided

### Caption

| | | |
|---|---|---|
| □ | = | Circuit diagram figure number |
| * | = | See note indicated by letter |
| A1 | = | Circuit-breaker accessories |
| A3 | = | Accessories applied to the fixed part of the circuit-breaker (for withdrawable version only) |
| A4 | = | Example switchgear and connections for control and signalling, outside the circuit-breaker |
| A13 | = | PR021/K signalling unit (outside the circuit-breaker) |
| A19 | = | PR330/R actuation unit |
| AY | = | SOR TEST UNIT Test/monitoring Unit (see note R) |
| D | = | Electronic time-delay device of the undervoltage release, outside the circuitbreaker |
| K51 | = | PR231/P, PR232/P, PR331/P, PR332/P type electronic trip unit with the following protection functions:<br>– L overload protection with inverse long time-delay trip - setting $I_1$<br>– S short-circuit protection with inverse or definite short time-delay trip - setting $I_2$<br>– I short-circuit protection with instantaneous time-delay trip - setting $I_3$<br>– G earth fault protection with inverse short time-delay trip - setting $I_4$ |
| K51/1...8 | = | Contacts of the PR021/K signalling unit |
| K51/GZin (DBin) | = | Zone selectivity: input for protection G or “reverse” direction input for protection D (only with Uaux. and PR332/P trip unit) |
| K51/GZout (DBout) | = | Zone selectivity: output for protection G or “reverse” direction output for protection D (only with and PR332/P trip unit) |

# Tmax molded case circuit breakers
## Wiring diagrams

### Caption (continued)

| | | |
|---|---|---|
| K51/SZin (DFin) | = | Zone selectivity: input for protection S or “direct” input for protection D (only with Uaux. and PR332/P trip unit) |
| K51/SZout (DFout) | = | Zone selectivity: output for protection S or “direct” output for protection D (only with Uaux. and PR332/P trip unit) |
| K51/YC | = | Closing control from PR332/P electronic trip unit with communication module PR330/D-M and PR330/R actua tion unit |
| K51/YO | = | Opening control from PR332/P electronic trip unit with communication module PR330/D-M and PR330/R actuation unit |
| M | = | Motor for charging the closing springs |
| Q | = | Circuit-breaker |
| Q/1...6 | = | Circuit-breaker auxiliary contacts |
| S33M/1...3 | = | Limit contacts for spring-charging motor |
| S4/1-2-3 | = | Contacts activated by the rotary handle of the circuit-breaker – only for circuit-breakers with manual control (see note C) |
| S43 | = | Switch for setting remote/local control |
| S51 | = | Contact for electrical signalling of circuit-breaker open due to tripping of the overcurrent trip unit. The circuit-breaker may be closed only after pressing the reset pushbutton, or after energizing the coil for electrical reset (if available) |
| S51/P1 | = | Programmable contact (as default it signals overload present - start) |
| S75E/1...2 | = | Contacts for electrical signalling of circuit-breaker in racked-out position (only with withdrawable circuit breakers) |
| S75I/1...7 | = | Contacts for electrical signalling of circuit-breaker in racked-in position (only with withdrawable circuit-breakers) |
| S75T/1..2 | = | Contacts for electrical signalling of circuit-breaker in test isolated position (only with withdrawable circuit breakers) |
| SC | = | Pushbutton or contact for closing the circuit-breaker |
| SO | = | Pushbutton or contact for opening the circuit-breaker |
| SO1 | = | Pushbutton or contact for opening the circuit-breaker with delayed trip |
| SO2 | = | Pushbutton or contact for opening the circuit-breaker with instantaneous trip |
| SR | = | Pushbutton or contact for electrical circuit-breaker reset |
| SRTC | = | Contact for electrical signalling of circuit-breaker open, with springs charged and ready to close |
| SY | = | Contact for electrical signalling of circuit-breaker open due to trip units tripped, YO, YO1, YO2, YU (tripped position) only for circuit-breakers with direct control |
| TI/L1 | = | Current transformer located on phase L1 |
| TI/L2 | = | Current transformer located on phase L2 |
| TI/L3 | = | Current transformer located on phase L3 |
| T0 | = | Homopolar Toroidal current transformer (see note T) |
| TU | = | Insulating voltage transformer |
| Uaux. | = | Auxiliary power supply voltage (see note F) |
| UI/L1 | = | Current sensor (Rogowski coil) located on phase L1 |
| UI/L2 | = | Current sensor (Rogowski coil) located on phase L2 |
| UI/L3 | = | Current sensor (Rogowski coil) located on phase L3 |
| UI/N | = | Current sensor (Rogowski coil) located on neutral |
| UI/0 | = | Current sensor (Rogowski coil) located on the conductor connecting to earth the star point of the MV/LV transformer (see note G) |
| W1 | = | Serial interface with control system (external bus): EIA RS485 interface (see note E) |
| W2 | = | Serial interface with the accessories of PR331/P and PR332/P trip units (internal bus) |
| X12…X15 | = | Delivery connectors for auxiliary circuits of withdrawable version circuit-breaker |
| XB1...XB7 | = | Connectors for the accessories of the circuit-breaker |
| XF | = | Delivery terminal box for the position contacts of the withdrawable circuit-breaker (located on the fixed part of the circuit-breaker) |
| XO | = | Connector for YO1 release |
| XR1 – XR2 | = | Connector for power circuits of PR231/P, PR232/P, PR331/P, and PR332/P trip units |
| XR5 – XR13 | = | Connector for power circuits of PR332/P trip unit |
| XV | = | Delivery terminal box for the auxiliary circuits of the fixed circuit-breaker |
| YC | = | Shunt closing release |
| YO | = | Shunt opening release |
| YO1 | = | Overcurrent shunt opening release (trip coil) |
| YO2 | = | Second shunt opening release (see note Q) |
| YR | = | Coil to electrically reset the circuit-breaker |
| YU | = | Undervoltage release (see notes B, C and Q) |

# Tmax molded case circuit breakers
## Wiring diagrams

### Description of figures

Fig. 1A = Motor circuit to charge the closing springs.
Fig. 2A = Circuit of shunt closing release.
Fig. 4A = Shunt opening release.
Fig. 6A = Instantaneous undervoltage release (see notes B, C and Q).
Fig. 7A = Undervoltage release with electronic time-delay device, outside the circuit-breaker (see notes B and Q).
Fig. 8A = Second shunt opening release (see note Q).
Fig. 11A = Contact for electrical signalling of springs charged or discharged.
Fig. 12A = Contact for electrical signalling of circuit-breaker open, with springs charged, and ready to close.
Fig. 13A = Contact for electrical signalling of circuit-breaker open due to tripping of the overcurrent release. The circuit-breaker may be closed only after pressing the reset pushbutton, or after energizing the coil for electronic reset (if available).
Fig. 14A = Electrical reset control.
Fig. 15A = Contact operated by the circuit-breaker rotary handle – for circuit-breakers with manual control only (see note C).
Fig. 21A = Circuit-breaker auxiliary contacts (for circuit-breakers with manual control only).
Fig. 22A = Circuit-breaker auxiliary contacts (for circuit-breakers with motor control only).
Fig. 31A = First set of contacts for electrical signalling of circuit-breaker in racked-in, test isolated, racked out position.
Fig. 41A = Auxiliary circuits of PR331/P trip unit (see note F).
Fig. 42A = Auxiliary circuits of PR332/P trip units (see notes F and N).
Fig. 43A = Circuits of the measuring module PR330/V of the PR332/P trip units internally connected to the circuit-breaker (optional).
Fig. 44A = Circuits of the measuring module PR330/V of the PR332/P trip units externally connected to the circuit-breaker (optional; see note O).
Fig. 45A = Circuits of the PR332/P trip unit with communication module PR330/D-M connected to PR330/V actuation unit (see notes E, F and N).
Fig. 46A = Circuits of the PR332/P trip unit PR330/V measuring module connected internally to the three-pole circuit-breaker with external neutral conductor (optional)
Fig. 61A = SOR TEST UNIT Test/monitoring unit (see note R).
Fig. 62A = Circuits of the PR021/K signalling module (outside the circuit-breaker).

### Incompatibility

The circuits indicated in the following figures cannot be supplied simultaneously on the same circuit-breaker:
6A - 7A - 8A
21A - 22A
41A - 42A - 45A
43A - 44A - 46A

## Notes

A) The circuit-breaker is only fitted with the applications specified in the ABB SACE order confirmation. To make out the order, please consult this catalogue.

B) The undervoltage release is supplied for operation using a power supply branched on the supply side of the circuit-breaker or from an independent source. The circuit-breaker can only close when the release is energized (there is a mechanical lock on closing).

C) In conformity with the Standards governing machine tools, contacts S4 shown in Fig. 15A can be used to open the Yu undervoltage release circuit (Fig. 6A) when the circuit-breaker is open and close it again upon a manual closing command from the rotary handle.

E) For the EIA RS485 serial interface connection see document RH0298 regarding MODBUS communication.

F) The auxiliary voltage Vaux allows actuation of all operations of the PR331/P, PR332/P and trip units.
Having requested a Vaux insulated from earth, one must use “galvanically separated converters” in compliance with IEC 60950 (UL 1950) or equivalent standards that ensure a common mode current or leakage current (see IEC 478/1, CEI 22/3) not greater than 3.5 mA, IEC 60364-41 and CEI 64-8.

G) Earth fault protection is available with the PR332/P trip unit by means of a current sensor located on the conductor connecting to earth the star centre of the MV/LV transformer.
The connections between terminals 1 and 2 (or 3) of current transformer UI/O and poles T7 and T8 of the X (or XV) connector Must be made with a two-pole shielded and stranded cable (see user manual), no more than 15 m long. The shield must be earthed on theccircuit-breaker side and current sensor side.

N) With PR332/P trip unit, the connections to the zone selectivity inputs and outputs must be made with a two-pole shielded and stranded cable (see user manual), no more than 300 m long. The shield must be earthed on the selectivity input side.

O) Systems with rated voltage greater than 690V require the use of an insulation voltage transformer to connect to the busbars.

P) With PR332/P trip unit with communication module PR330/D-M, the coils YO and YC can be controlled directly from contacts K51/YO and K51/YC with maximum voltages of 110-120 V DC e 240-250 V AC.

Q) The second opening release may be installed as an alternative to the undervoltage release.

R) The SACE SOR TEST UNIT + opening release (YO) is guaranteed to operate starting at 75% of the Vaux of the opening release itself. While the YO power supply contact is closing (short-circuit on terminals 4 and 5), the SACE SOR TEST UNIT is unable to detect the opening coil status. Consequently:
– For continuously powered opening coil, the TEST FAILED and ALARM signals will be activated
– If the coil opening command is of the pulsing type, the TEST FAILED signal may appear at the same time. In this case, the TEST FAILED signal is actually an alarm signal only if it remains lit for more than 20s.

S) The connection cable shield must only be earthed on the circuit-breaker side.

T) The connections between the TO toroidal transformer and the poles of the X13 (or XV) connector of the circuit-breaker must be made using a four-pole shielded cable with paired braided conductors (BELDEN 9696 paired type), with a length of not more than 15 m. The shield must be earthed on the circuit-breaker side.

# Tmax molded case circuit breakers
# Wiring diagrams

## Information for reading - Circuit-breaker T8

### Warning

Before installing the circuit breaker, carefully read notes F and O on the circuit diagrams.

### Operating status shown

The circuit diagram is for the following conditions:
– circuit breaker in open position
– circuits de-energized
– trip units not tripped
– motor operating mechanism with springs discharged.

### Versions

The control circuits are fitted between terminals XV (connectors X12-X13-X14-X15 are not supplied).

#### Molded case switches (MCS)

With this version, the applications indicated in figures 13, 14, 41A, 42A, 43A, 44A, 45A, 62A cannot be provided.

#### Version with PR331/P electronic trip unit

With this version, the applications indicated in figures 42A, 43A, 44A, 45A cannot be provided.

#### Version with PR332/P electronic trip unit

With this version, the applications indicated in figure 41A cannot be provided.

### Caption

| | | |
|---|---|---|
| □ | = | Circuit diagram figure number |
| * | = | See note indicated by letter |
| A1 | = | Circuit breaker accessories |
| A4 | = | Example switchgear and connections for control and signaling, outside the circuit breaker |
| A13 | = | PR021/K signaling unit (outside the circuit breaker) |
| A19 | = | PR330/R actuation unit |
| AY | = | SOR TEST UNIT Test/monitoring Unit (see note R) |
| D | = | Electronic time-delay device of the undervoltage release, outside the circuit breaker |
| K51 | = | PR331/P, PR332/P type electronic trip unit with the following protection functions:<br>– L overload protection with inverse long time-delay trip - setting $I_1$<br>– S short-circuit protection with inverse or definite short time-delay trip - setting $I_2$<br>– I short-circuit protection with instantaneous time-delay trip - setting $I_3$<br>– G ground fault protection with inverse short time-delay trip - setting $I_4$ |
| K51/1...8 | = | Contacts of the PR021/K signaling unit |
| K51/GZin (DBin) | = | Zone selectivity: input for protection G or “reverse” direction input for protection D (only with Uaux. and PR332/P trip unit) |
| K51/GZout (DBout) | = | Zone selectivity: output for protection G or “reverse” direction output for protection D (only with and PR332/P trip unit) |
| K51/SZin (DFin) | = | Zone selectivity: input for protection S or “direct” input for protection D (only with Uaux. and PR332/P trip unit) |
| K51/SZout (DFout) | = | Zone selectivity: output for protection S or “direct” output for protection D (only with Uaux. and PR332/P trip unit) |
| K51/YC | = | Closing control from PR332/P electronic trip unit with communication module PR330/D-M and PR330/R actuation unit |

## Caption (continued)

| | | |
|---|---|---|
| K51/YO | = | Opening control from PR332/P electronic trip unit with communication module PR330/D-M and PR330/R actuation unit |
| M | = | Motor for charging the closing springs |
| Q | = | Circuit breaker |
| Q/1...5 | = | Circuit breaker auxiliary contacts |
| S33M/1...3 | = | Limit contacts for spring-charging motor |
| S43 | = | Switch for setting remote/local control |
| S51 | = | Contact for electrical signaling of circuit breaker open due to tripping of the over-current trip unit. The circuit breaker may be closed only after pressing the reset pushbutton, or after energizing the coil for electrical reset (if available) |
| S51/P1 | = | Programmable contact (as default it signals overload present - start) |
| SC | = | Pushbutton or contact for closing the circuit breaker |
| SO | = | Pushbutton or contact for opening the circuit breaker |
| SO1 | = | Pushbutton or contact for opening the circuit breaker with delayed trip |
| SO2 | = | Pushbutton or contact for opening the circuit breaker with instantaneous trip |
| SR | = | Pushbutton or contact for electrical circuit breaker reset |
| SRTC | = | Contact for electrical signaling of circuit breaker open, with springs charged and ready to close |
| SY | = | Contact for electrical signaling of circuit breaker open due to trip units tripped, YO, YO1, YO2, YU (tripped position) only for circuit breakers with direct control |
| TI/L1 | = | Current transformer located on phase L1 |
| TI/L2 | = | Current transformer located on phase L2 |
| TI/L3 | = | Current transformer located on phase L3 |
| Uaux. | = | Auxiliary power supply voltage (see note F) |
| UI/L1 | = | Current sensor (Rogowski coil) located on phase L1 |
| UI/L2 | = | Current sensor (Rogowski coil) located on phase L2 |
| UI/L3 | = | Current sensor (Rogowski coil) located on phase L3 |
| UI/N | = | Current sensor (Rogowski coil) located on neutral |
| UI/0 | = | Current sensor (Rogowski coil) located on the conductor connecting to ground the star point of the MV/LV transformer (see note G) |
| W1 | = | Serial interface with control system (external bus): EIA RS485 interface (see note E) |
| W2 | = | Serial interface with the accessories of PR331/P and PR332/P trip units (internal bus) |
| XB1...XB7 | = | Connectors for the accessories of the circuit breaker |
| XF | = | Delivery terminal box for the position contacts of the draw out circuit breaker (located on the cradle of the circuit breaker) |
| XO | = | Connector for YO1 release |
| XR1 – XR2 | = | Connector for power circuits of PR331/P, and PR332/P trip units |
| XR5 – XR13 | = | Connector for power circuits of PR332/P trip unit |
| XV | = | Delivery terminal box for the auxiliary circuits |
| YC | = | Closing coil |
| YO | = | Shunt trip |
| YO1 | = | Overcurrent shunt trip (trip coil) |
| YO2 | = | Second shunt trip (see note Q) |
| YR | = | Coil to electrically reset the circuit breaker |
| YU | = | Undervoltage release (see notes B, C and Q) |

# Tmax molded case circuit breakers
# Wiring diagrams

## Description of figures

| | | |
|---|---|---|
| Fig. 1 | = | Motor circuit to charge the closing springs. |
| Fig. 2 | = | Circuit of closing coil. |
| Fig. 4 | = | Shunt trip. |
| Fig. 6 | = | Instantaneous undervoltage release (see notes B, C and Q). |
| Fig. 7 | = | Undervoltage release with electronic time-delay device, outside the circuit breaker (see notes B and Q). |
| Fig. 8 | = | Second shunt trip (see note Q). |
| Fig. 11 | = | Contact for electrical signaling of springs charged or discharged. |
| Fig. 12 | = | Contact for electrical signaling of circuit breaker open, with springs charged, and ready to close. |
| Fig. 13 | = | Contact for electrical signaling of circuit breaker open due to tripping of the overcurrent release. The circuit breaker may be closed only after pressing the reset pushbutton, or after energizing the coil for electronic reset (if available). |
| Fig. 14 | = | Electrical reset control. |
| Fig. 21 | = | Circuit breaker auxiliary contacts (for circuit breakers with manual control only). |
| Fig. 41A | = | Auxiliary circuits of PR331/P trip unit (see note F). |
| Fig. 42A | = | Auxiliary circuits of PR332/P trip units (see notes F and N). |
| Fig. 43A | = | Circuits of the measuring module PR330/V-T8 of the PR332/P trip units internally connected to the circuit breaker (optional). |
| Fig. 44A | = | Circuits of the measuring module PR330/V-T8 of the PR332/P trip units externally connected to the circuit breaker (optional; see note O). |
| Fig. 45A | = | Circuits of the PR332/P trip unit with communication module PR330/D-M connected to PR330/V actuation unit (see notes E, F and N). |
| Fig. 46A | = | Circuits of the PR332/P trip unit PR330/V-T8 measuring module connected internally to the three-pole circuit breaker with external neutral conductor (optional) |
| Fig. 61A | = | SOR TEST UNIT Test/monitoring unit (see note R). |
| Fig. 62A | = | Circuits of the PR021/K signalling module (outside the circuit breaker) |

## Incompatibilities

The circuits indicated in the following figures cannot be supplied simultaneously on the same circuit breaker:
6 - 7 - 8
13 - 14
41A - 42A - 45A
43A - 44A - 46A

## Notes

A) The circuit breaker is only fitted with the accessories specified in the ABB order acknowledgement. Please contact your local sales organization.

B) The undervoltage release is supplied for operation using a power supply branched on the supply side of the circuit breaker or from an independent source. The circuit breaker can only close when the trip unit is energized (there is a mechanical lock on closing).

E) For the EIA RS485 serial interface connection see document ITSCE - RH0298 regarding MODBUS communication.

F) The auxiliary voltage Uaux allows actuation of all operations of the PR331/P and PR332/P trip units. Having requested a Uaux insulated from ground, one must use “galvanically separated converters” in compliance with IEC 60950 (UL 1950) or equivalent standards that ensure a common mode current or leakage current (see IEC 478/1, CEI 22/3) not greater than 3.5 mA, IEC 60364-41 and CEI 64-8.

G) Ground fault protection is available with the PR332/P trip units by means of a current sensor located on the conductor connecting to ground the star center of the MV/LV transformer. The connections between terminals 1 and 2 (or 3) of current transformer UI/O and poles T7 and T8 of the X (or XV) connector must be made with a two pole shielded and stranded cable (type BELDEN 8762/8772), no more than 15 m long. The shield must be grounded on the circuit breaker side and current sensor side.

N) With PR332/P trip units, the connections to the zone discrimination inputs and outputs must be made with a two-pole shielded and stranded cable (type BELDEN 8762/8772), no more than 300 m long. The shield must be grounded on the discrimination input side.

O) Systems with rated voltage greater than 690V require the use of an insulation voltage transformer to connect to the busbars.

P) With PR332/P trip units with communication module PR330/R, the power supply for coils YO and YC must not be taken from the main power supply. The coils can be controlled directly from contacts K51/YO and K51/ YC with maximum voltages of 110-120 V DC and 240-250 V AC.

Q) The second shunt trip may be installed as an alternative to the undervoltage release.

R) The SOR TEST UNIT + shunt trip (YO) is guaranteed to operate starting at 75% of the Uaux of the shunt trip itself.
While the YO power supply contact is closing (short-circuit on terminals 4 and 5), the SOR TEST UNIT is unable to detect the opening coil status. Consequently:
- for continuously powered opening coil, the TEST FAILED and ALARM signals will be activated
- if the coil opening command is of the pulsing type, the TEST FAILED signal may appear at the same time. In this case, the TEST FAILED signal is actually an alarm signal only if it remains lit for more than 20s.

S) The connection cable shield must only be grounded on the circuit breaker side.

T) The connections between the TO toroidal transformer and the poles of the X13 (or XV) connector of the circuit breaker must be made using a four-pole shielded cable with paired braided conductors (BELDEN 9696 paired type), with a length of not more than 15 m. The shield must be grounded on the circuit breaker side.

# Tmax molded case circuit breakers
## Wiring diagrams

### Graphic symbols (IEC 60617 and CEI 3-14...3-26 standards)

Thermal effect

Electromagnetic effect

Delay

Mechanical connection (link)

Manually operated control (general case)

Operated by turning

Operated by pushing

Operated by key

Operated by cam

Hearth, groung (general symbol)

Converter with galvanic separator

Conductors in a screened cable, two conductors shown

Twisted conductors, two conductors shown

Connection of conductors

Terminal

Plug and socket (male and female)

Resistor (general symbol)

Temperature dependent resistor

Motor (general symbol)

Induction motor, three-phase, squirrel cage

Current transformer

Current transformer with four threaded winding and with one permanent winding with one tapping

Make contact

Break contact

Change-over break before make contact

Position switch (limit switch), make contact

Position switch (limit switch), break contact

Position switch (limit switch) change-over break before make contact

Contactor (contact open in the unoperated position)

Circuit-breaker disconnector with automatic trip unit

Switch-disconnector (on-load isolating switch)

Operating device (general symbol)

Thermal relay

Instantaneous overcurrent or rate-of-rise relay

Overcurrent relay with adjustable short time-lag characteristic

Overcurrent relay with inverse short time-lag characteristic

Overcurrent relay with inverse long time-lag characteristic

Earth fault overcurrent relay with inverse short time-lag characteristic

Phase-balance current relay

Differential current relay

Phase-failure detection relay in a three-phase system

Locked-rotor detection relay operating by current sensing

Lamp, general symbol

Mechanical interlock between two devices

Operated by electric motor

Motor with series energization

Screen, shield (it may be drawn in any convenient shape)

Equipotentiality

Voltage transformer

Winding of three-phase transformer, connection star

Current sensing element

# Tmax molded case circuit breakers
# Wiring diagrams

## Wiring diagrams circuit breakers T1 - T3 and T4 - T6

### State of operation

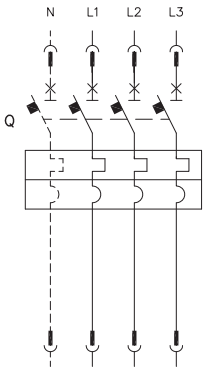


Three-pole or four-pole circuit-breaker with thermomagnetic trip unit

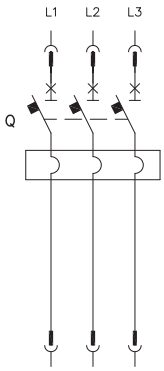


Three-pole circuit-breaker with magnetic trip unit

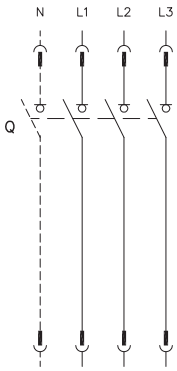


Three-pole or four-pole switch-disconnector (on-load isolating switch)

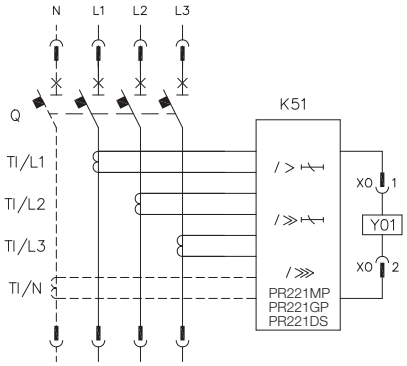


Three-pole or four-pole circuit-breaker with PR221 electronic trip unit

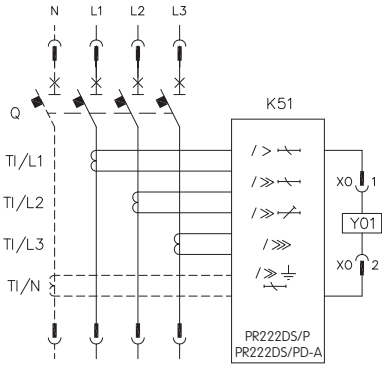


Three-pole or four-pole circuit-breaker with PR222DS/P, PR222DS/PD-A electronic trip unit (for T4, T5 and T6)

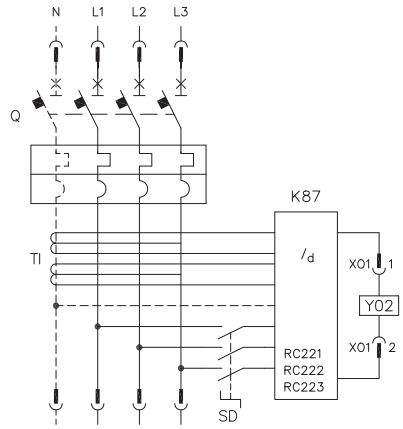


Three-pole or four-pole circuit-breaker with RC221, RC222 or RC223 residual current trip unit

# Tmax molded case circuit breakers
## Wiring diagrams

### State of operation

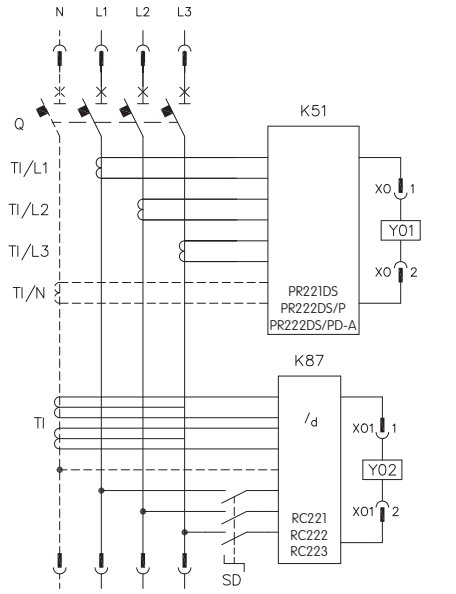


Three-pole or four-pole circuit-breaker with PR221DS, PR222DS/P or PR222DS/PD-A electronic trip unit and RC221, RC222 or RC223 residual current trip unit (for T4, T5 and T6 four-pole only)

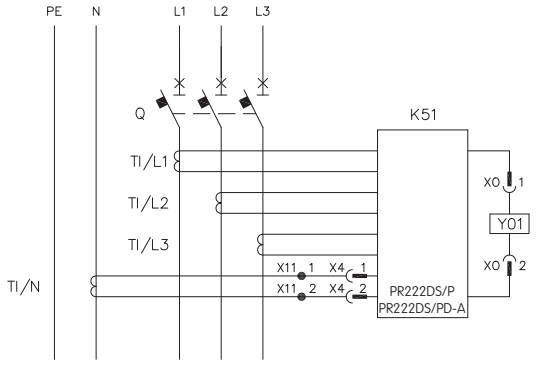


Fixed version three-pole circuit-breaker with current transformer on neutral conductor, external to circuit-breaker (for T4, T5 and T6)

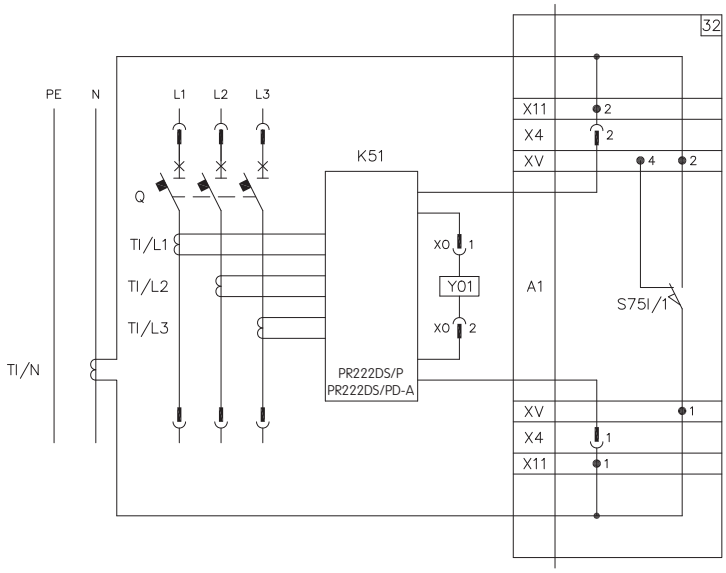


Plug-in or withdrawable version three-pole circuit-breaker with current transformer on neutral conductor, external to circuit-breaker (for T4, T5 and T6)

# Tmax molded case circuit breakers
# Wiring diagrams

## Wiring diagrams circuit breakers Ts3

### State of operation

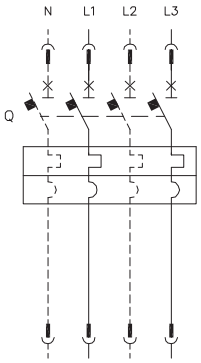


2 pole, 3 pole or 4 pole Ts3 circuit breaker with thermomagnetic trip unit

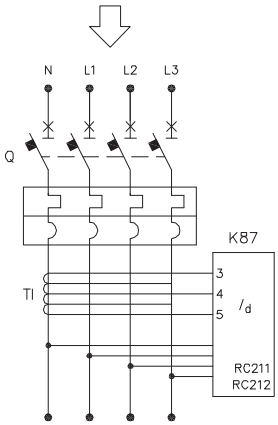


Fixed version 4 pole Ts3 circuit breaker with RC211 or RC212 residual current release (vertical installation)

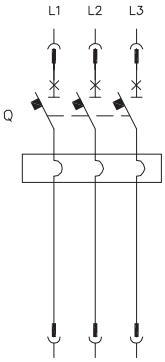


Ts3 MCP 3 pole with magnetic trip unit

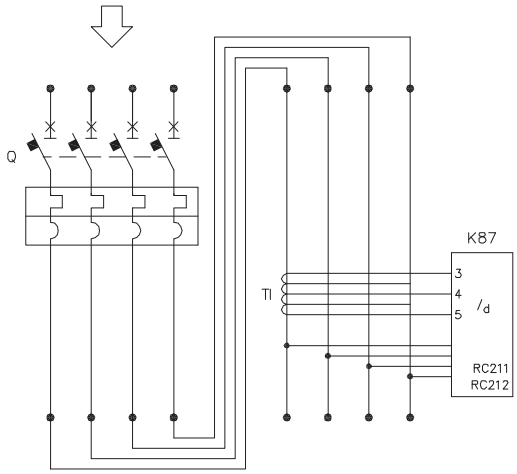


Fixed version 4 pole Ts3 circuit breaker with RC211 or RC212 residual current release (side by side installation)

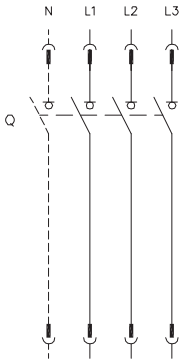


Ts3 MCS 3 pole or 4 pole

# Tmax molded case circuit breakers
# Wiring diagrams

## Wiring diagrams circuit breakers T7

## State of operation

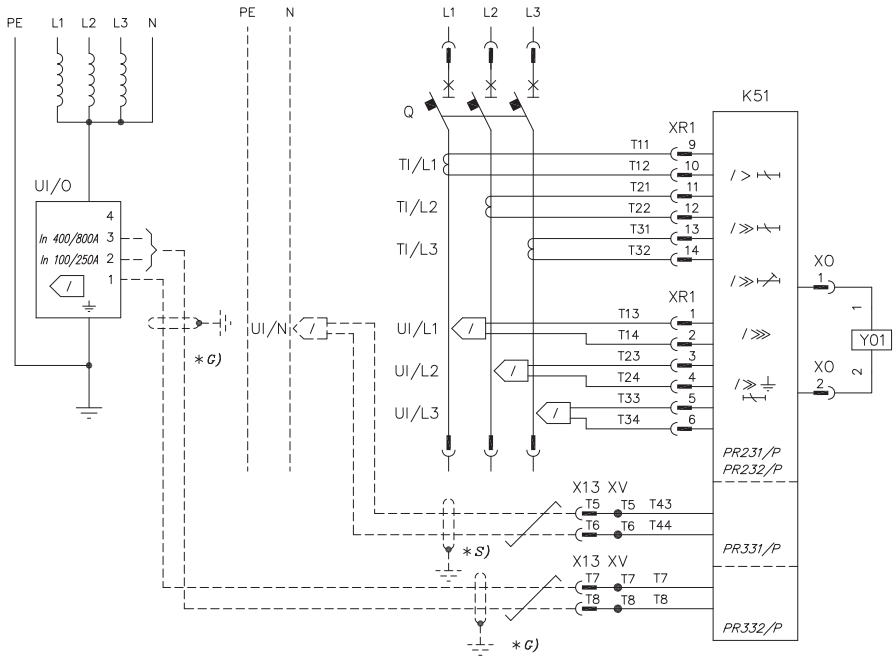


3 pole circuit-breaker with PR231/P, PR232/P, PR331/P, PR332/P electronic trip unit

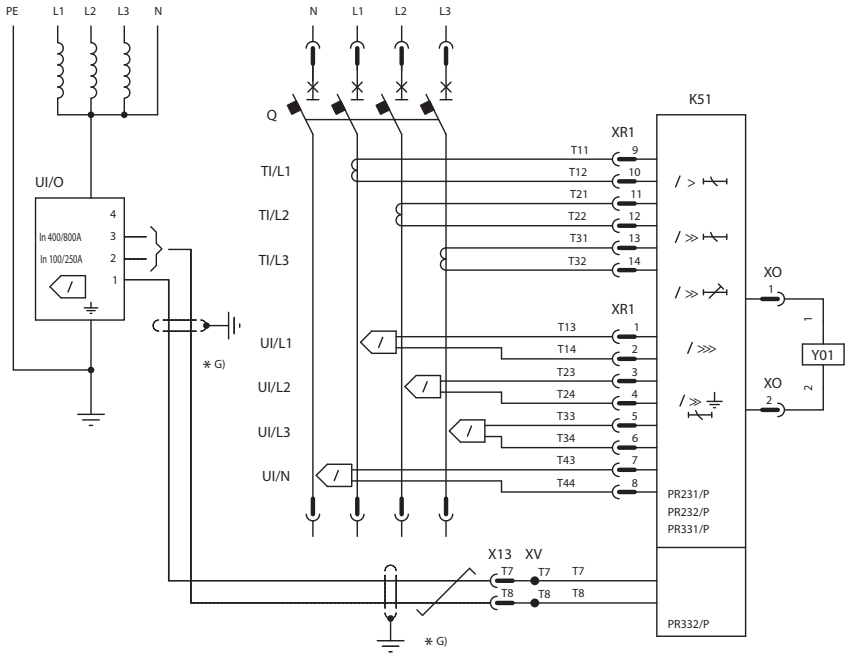


4 pole circuit-breaker with PR231/P, PR232/P, PR331/P, PR332/P electronic trip unit

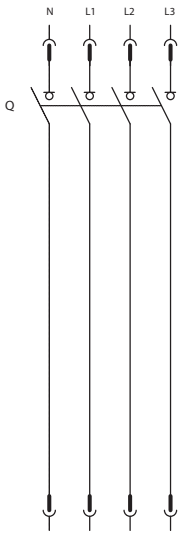


3 pole or 4 pole switch disconnector

# Tmax molded case circuit breakers
## Wiring diagrams

### State of operation

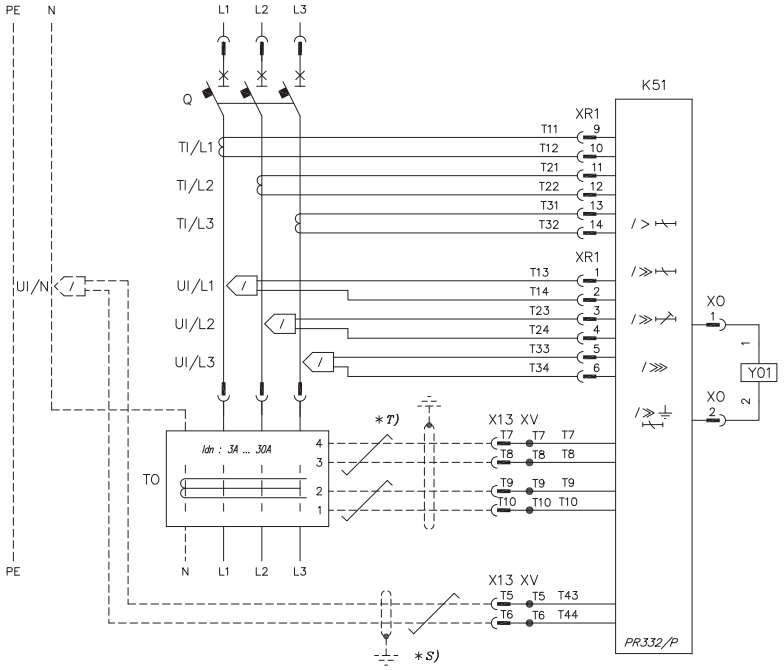


Three-pole circuit-breaker with PR332/P electronic trip unit, residual current protection and U ≤ 690 V

# Tmax molded case circuit breakers
# Wiring diagrams

## Wiring diagrams circuit breakers T8

### State of operation

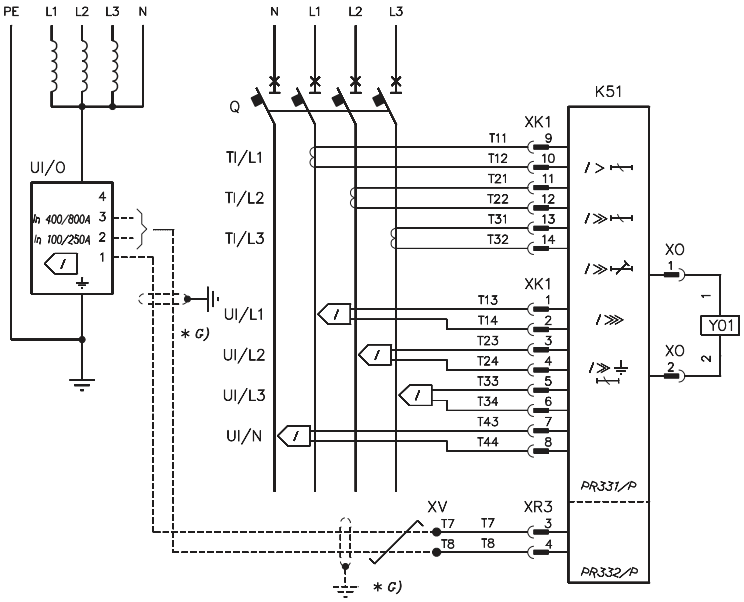


4 pole circuit-breaker with PR331/P, PR332/P electronic trip unit

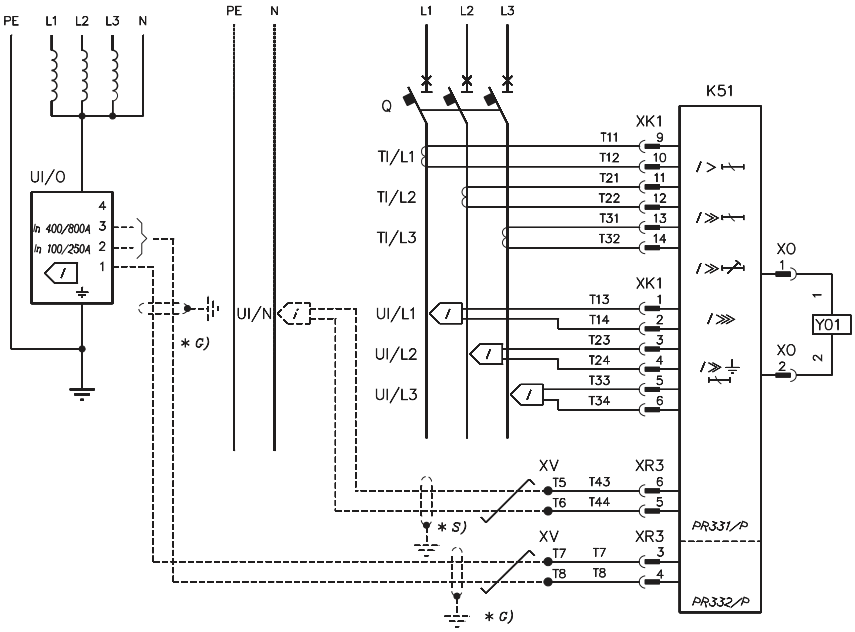


3 pole circuit-breaker with PR331/P, PR332/P electronic trip unit

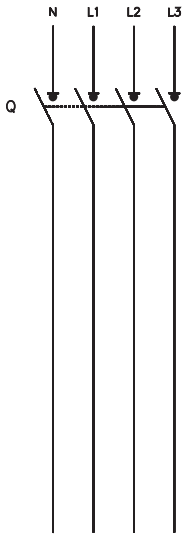


3 pole or 4 pole switch disconnector

# Tmax molded case circuit breakers
## Wiring diagrams

### Wiring diagrams electrical accessories T1 - T3 and T4 - T6

### Shunt trip and undervoltage release

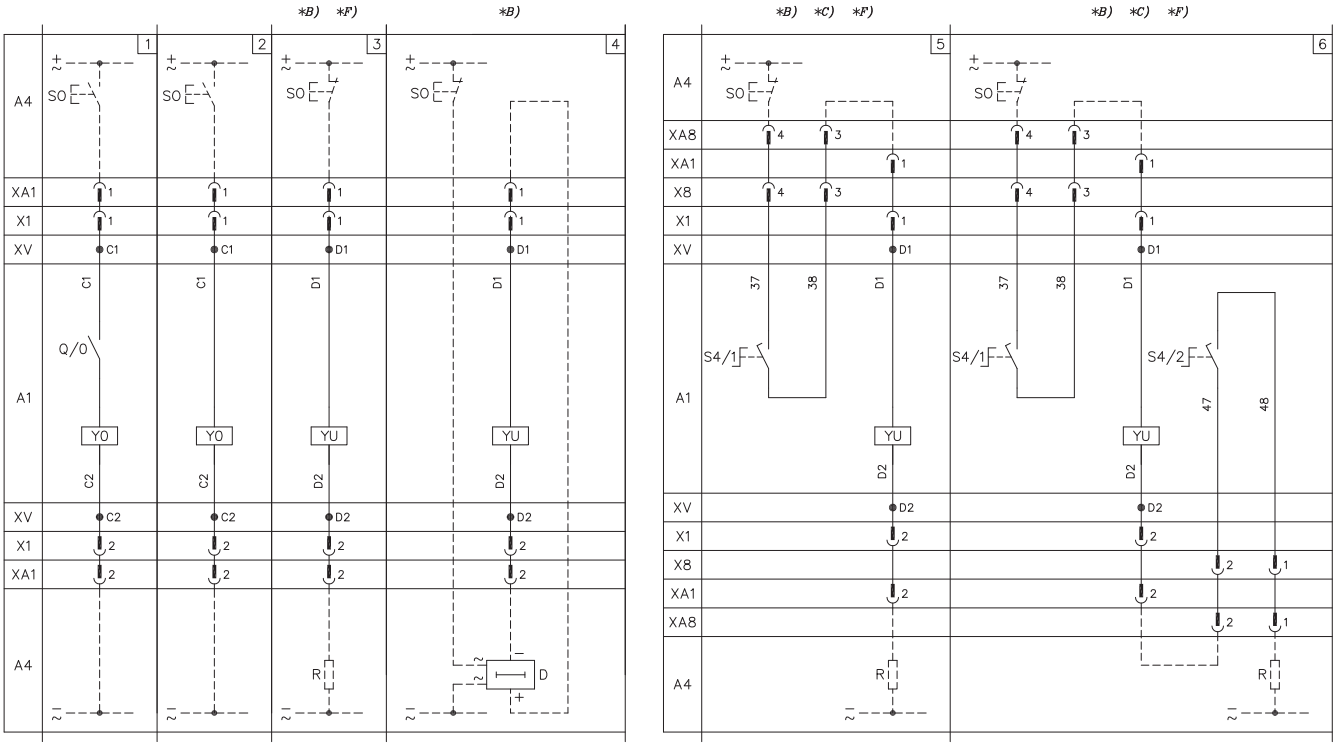


### Residual current release and remote controls

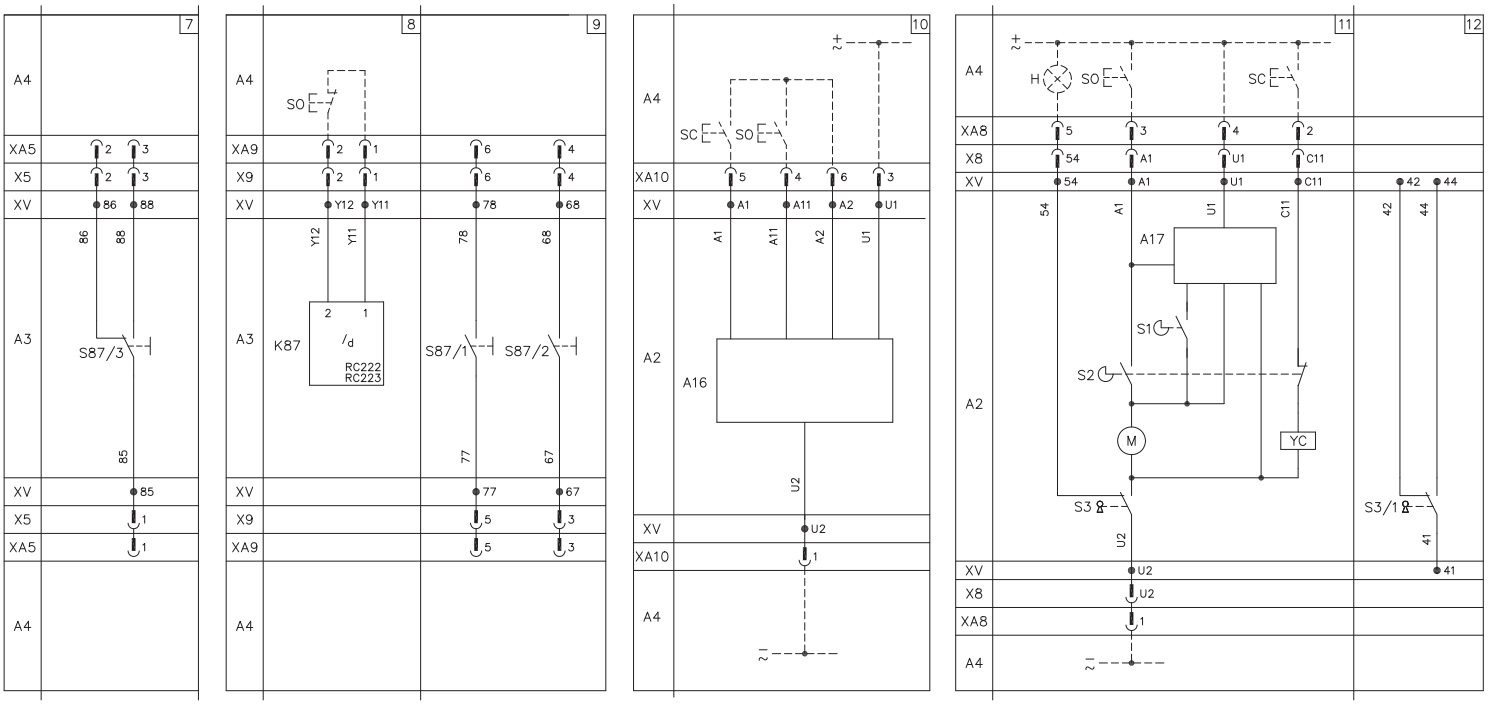

# Tmax molded case circuit breakers
## Wiring diagrams

### Auxiliary contacts

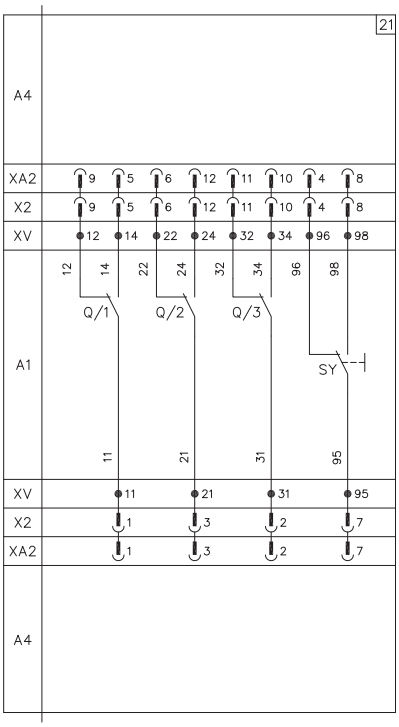


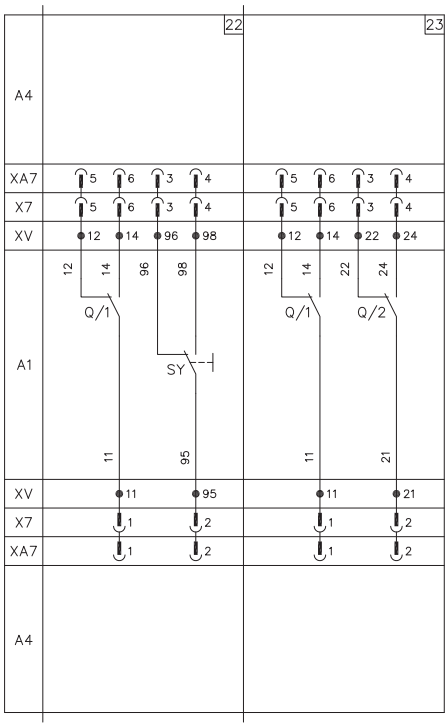


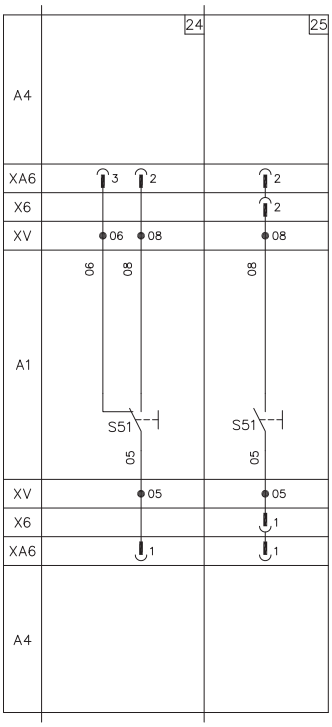


### Position contacts

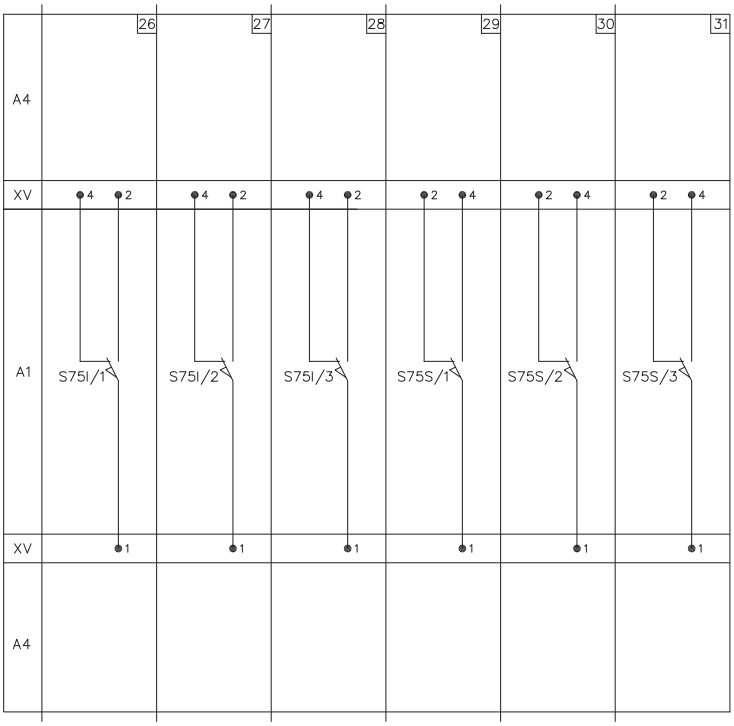

# Tmax molded case circuit breakers
## Wiring diagrams

### PR222DS/P, PR222DS/PD-A electronic trip unit connected to FDU display unit

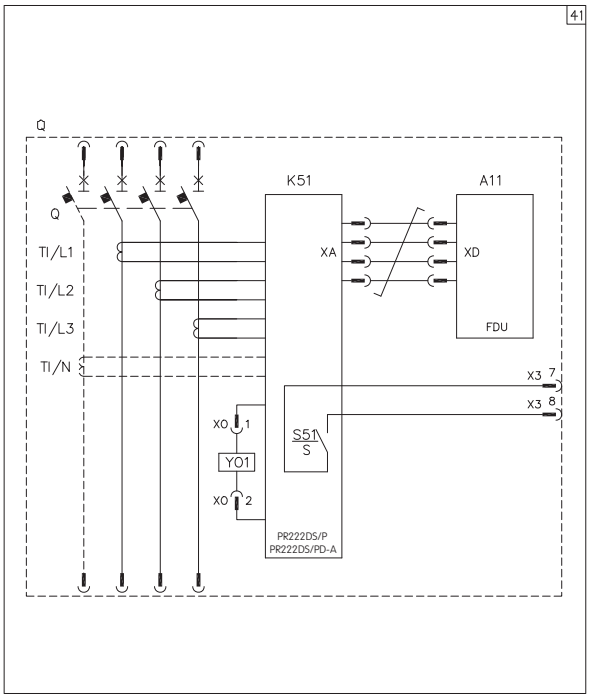


### PR222DS/PD-A electronic trip unit connected with the AUX-E auxiliary contacts

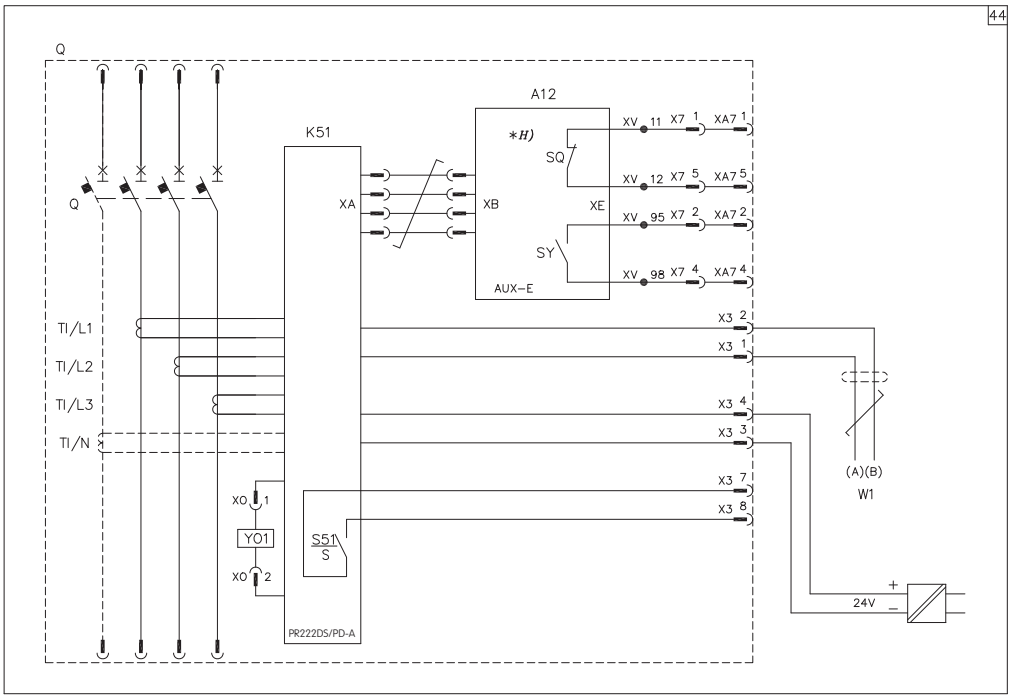

# Tmax molded case circuit breakers
## Wiring diagrams

### PR222DS/PD-A electronic trip unit connected with the AUX-E auxiliary contacts and MOE-E

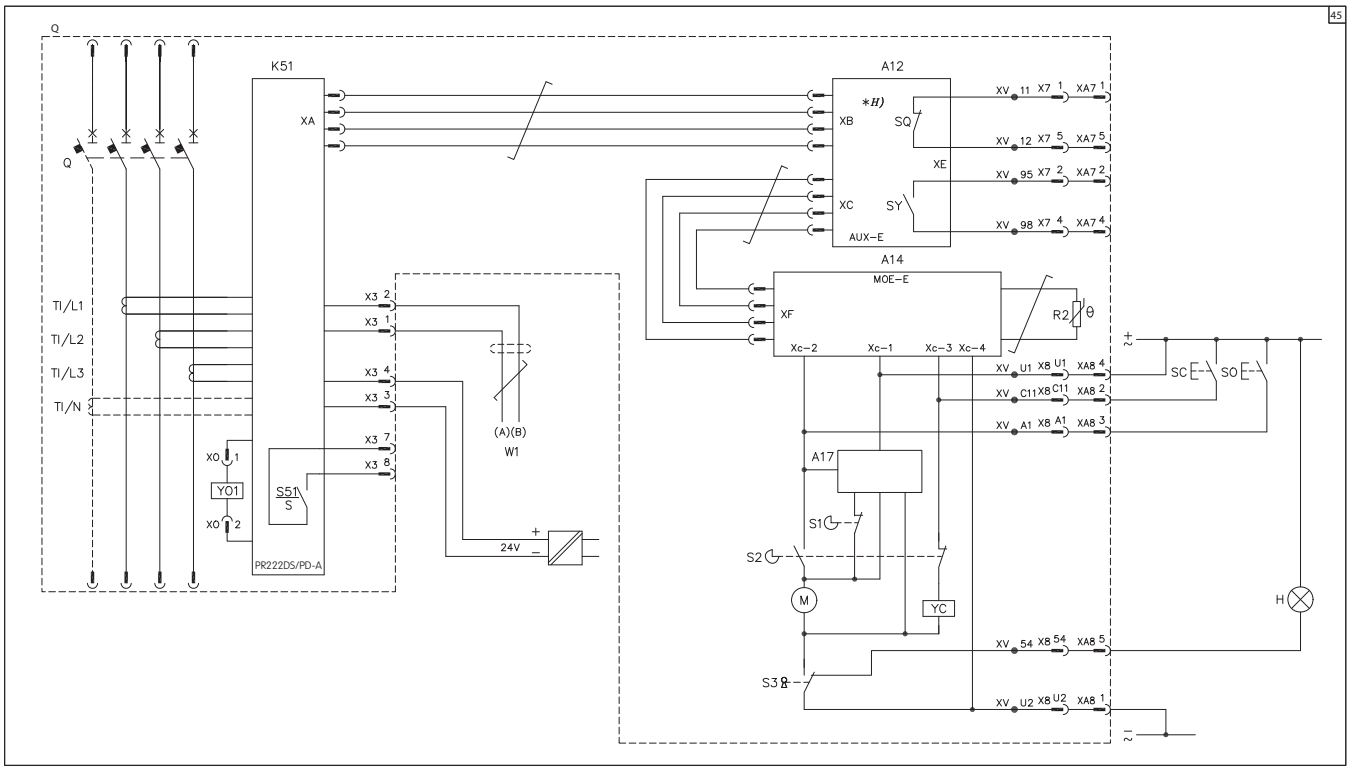


### PR222DS/PD-A electronic trip unit connected with the AUX-E auxiliary contacts and FDU

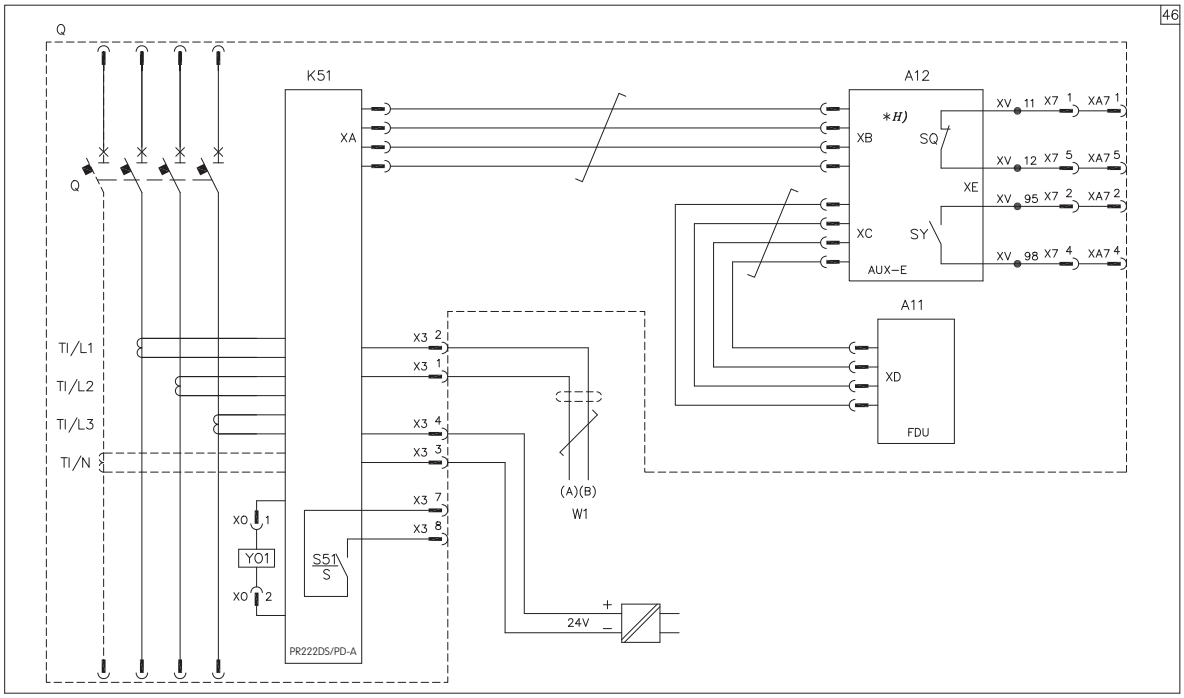

# Tmax molded case circuit breakers
## Wiring diagrams

### Wiring diagrams electrical accessories Ts3

### Residual current releases, service releases and direct action motor operator

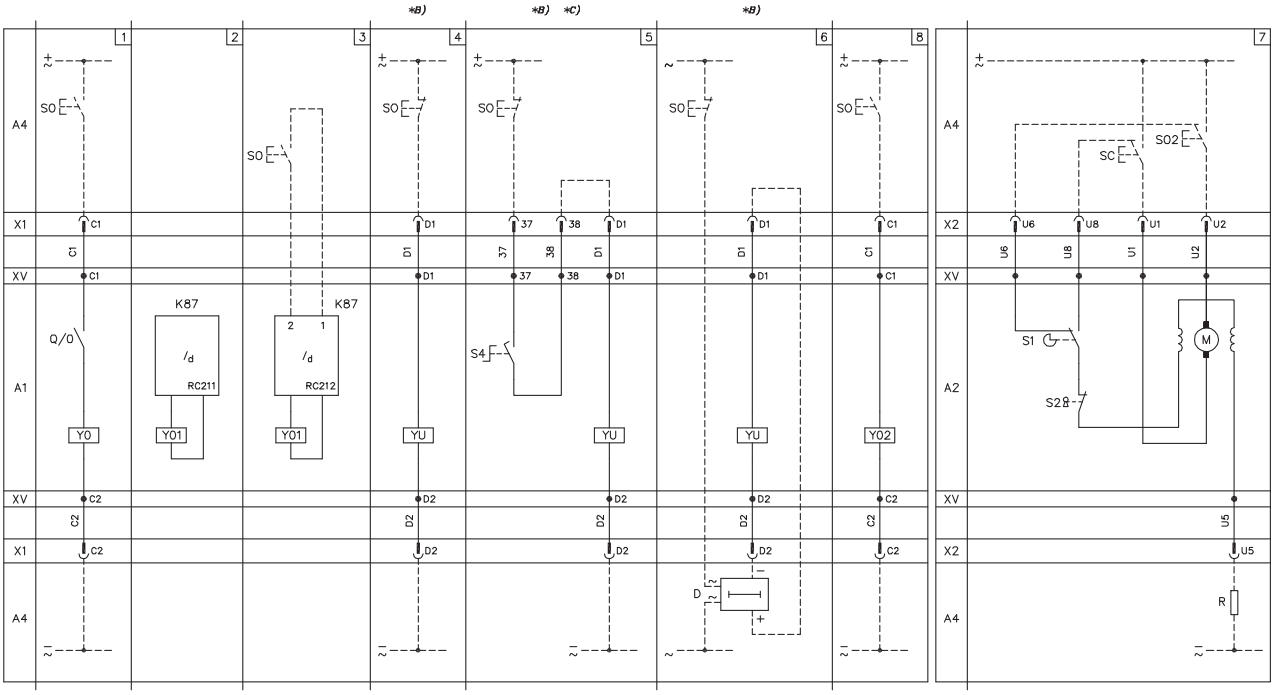


### Auxiliary contacts

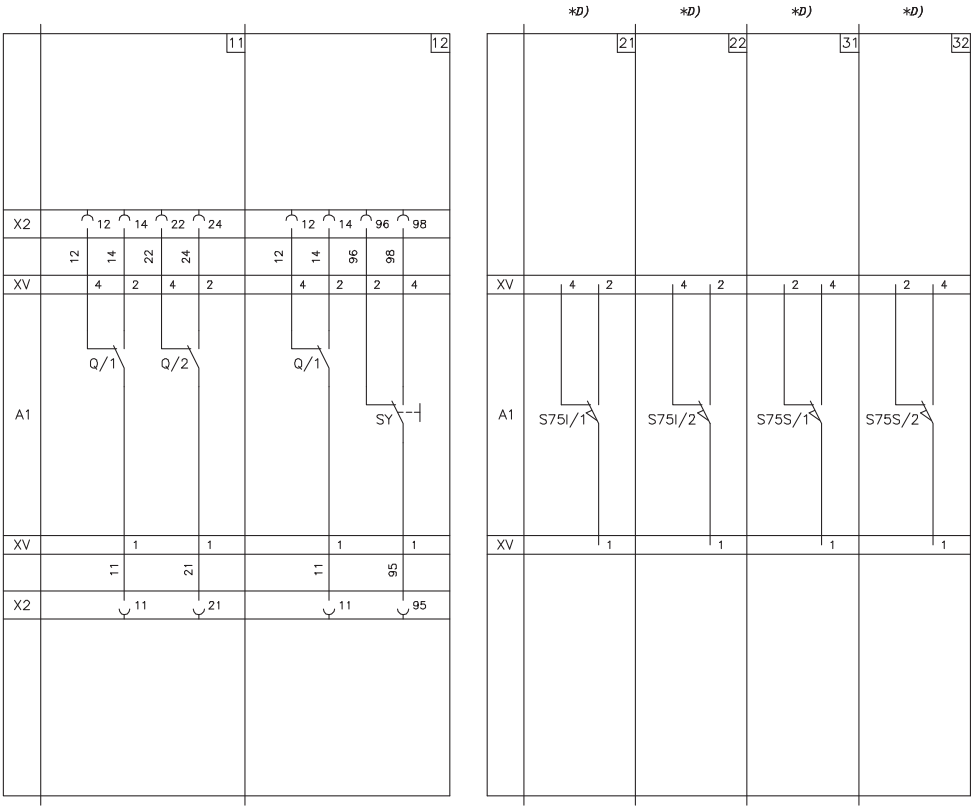

# Tmax molded case circuit breakers
# Wiring diagrams

## Wiring diagrams electrical accessories T7

## Motor operator, shunt trip, closing coil and undervoltage releases

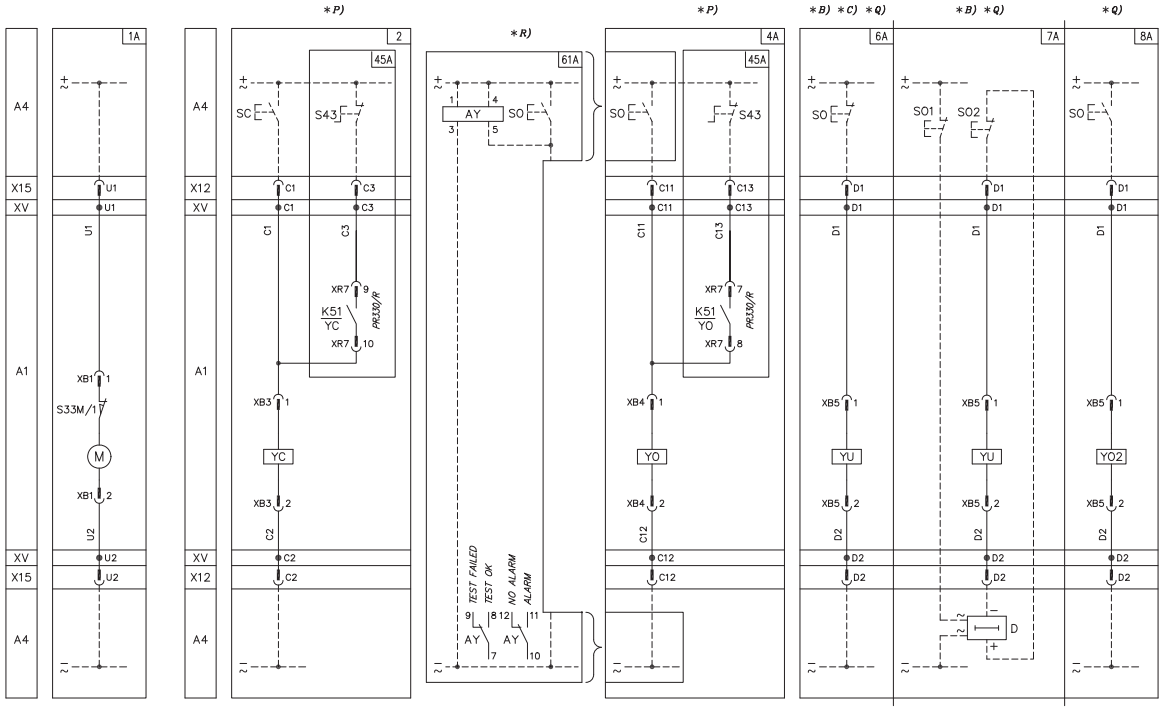


## Signalling contacts

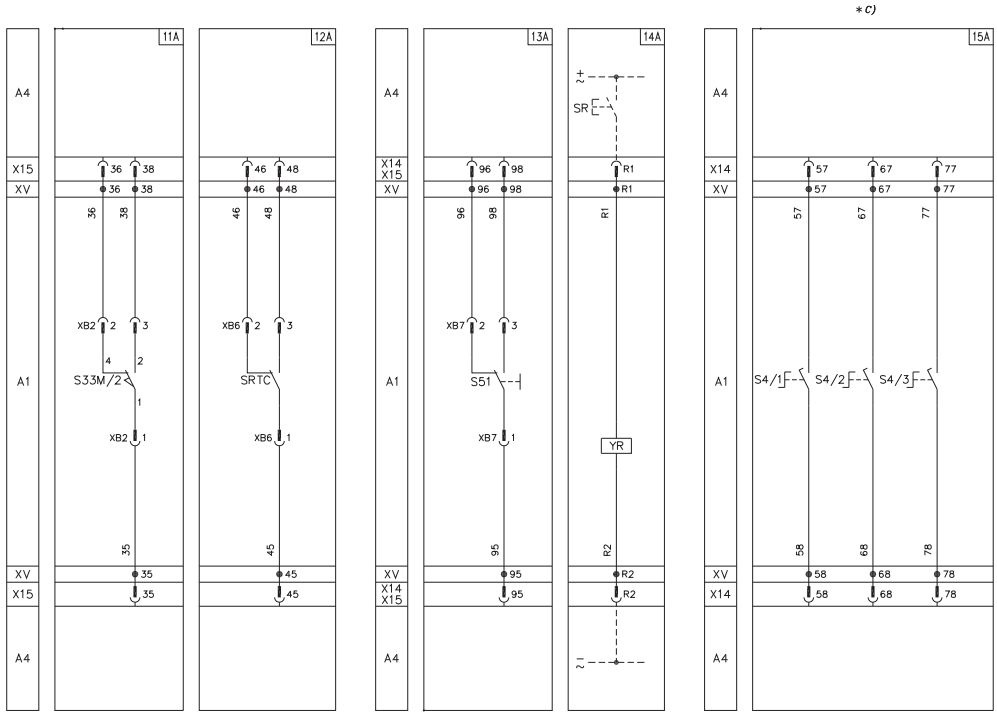

# Tmax molded case circuit breakers
## Wiring diagrams

### Signalling contacts

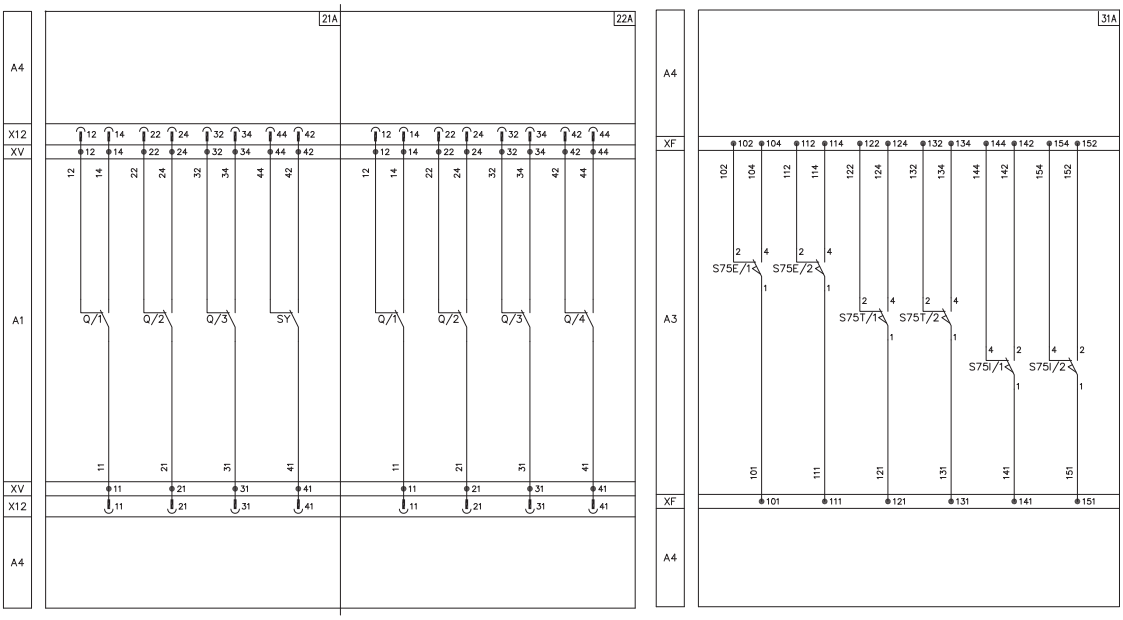


### Auxiliary circuits of the PR331/P and PR332/P trip units

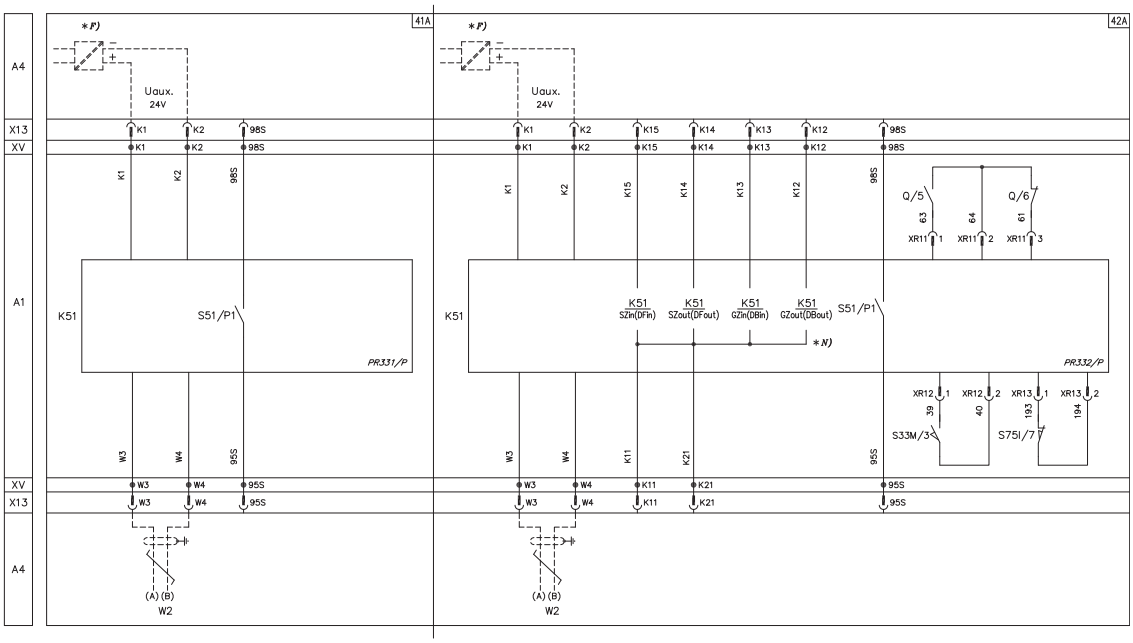

# Tmax molded case circuit breakers
## Wiring diagrams

### PR332/P trip unit equipped with PR330/R actuator unit and PR330/D-M dialog unit

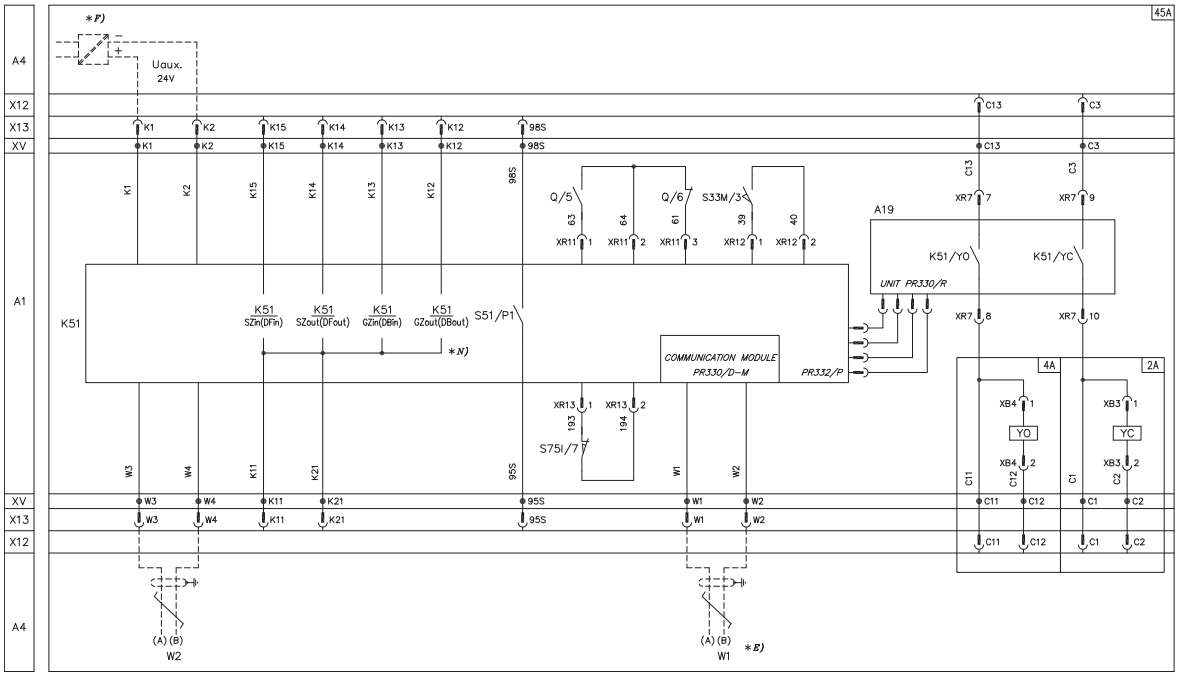


### Mesuring module PR330/V

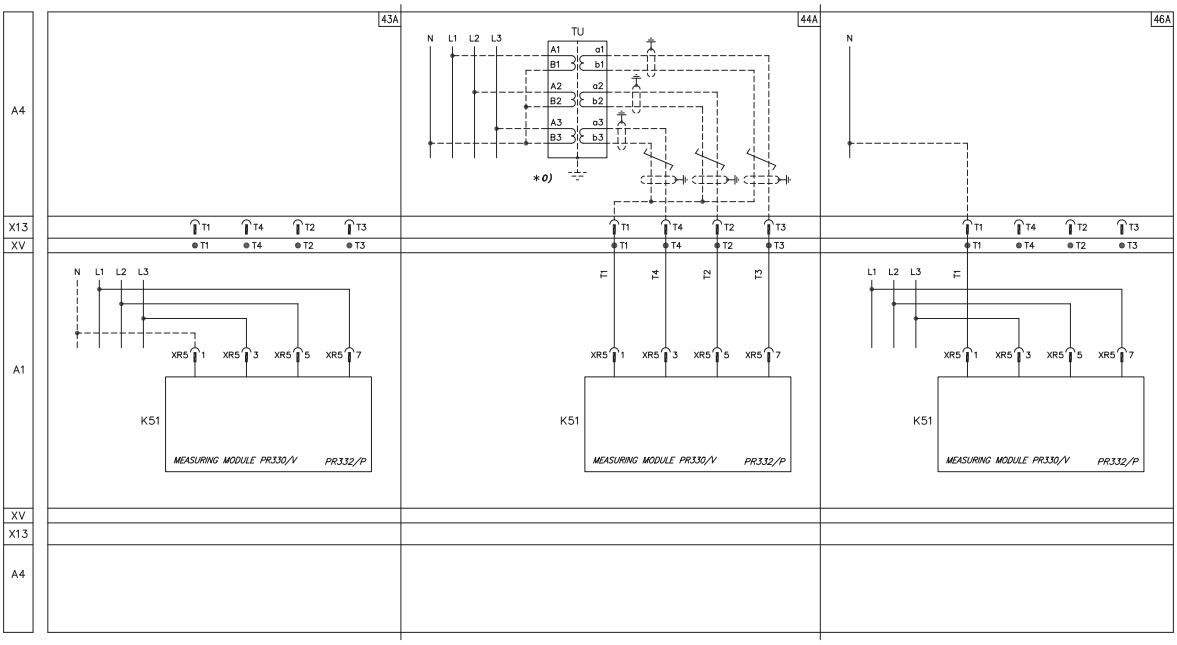

# Tmax molded case circuit breakers
## Wiring diagrams

### Wiring diagrams electrical accessories T8

### Motor operator, shunt trip, closing coil and undervoltage releases

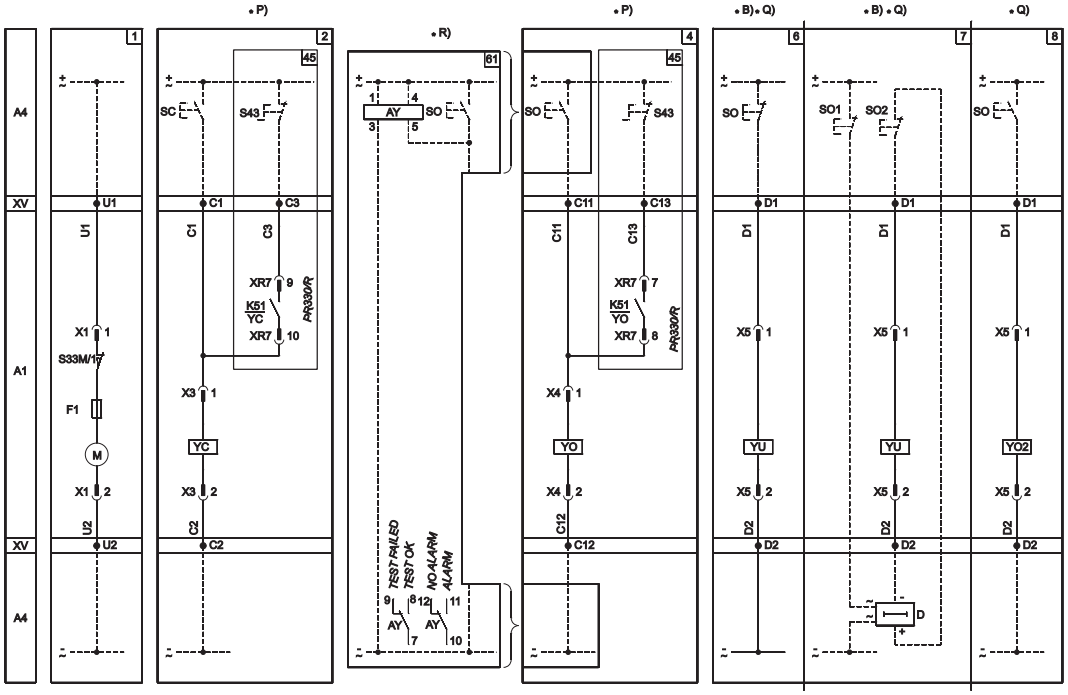


### Signalling contacts

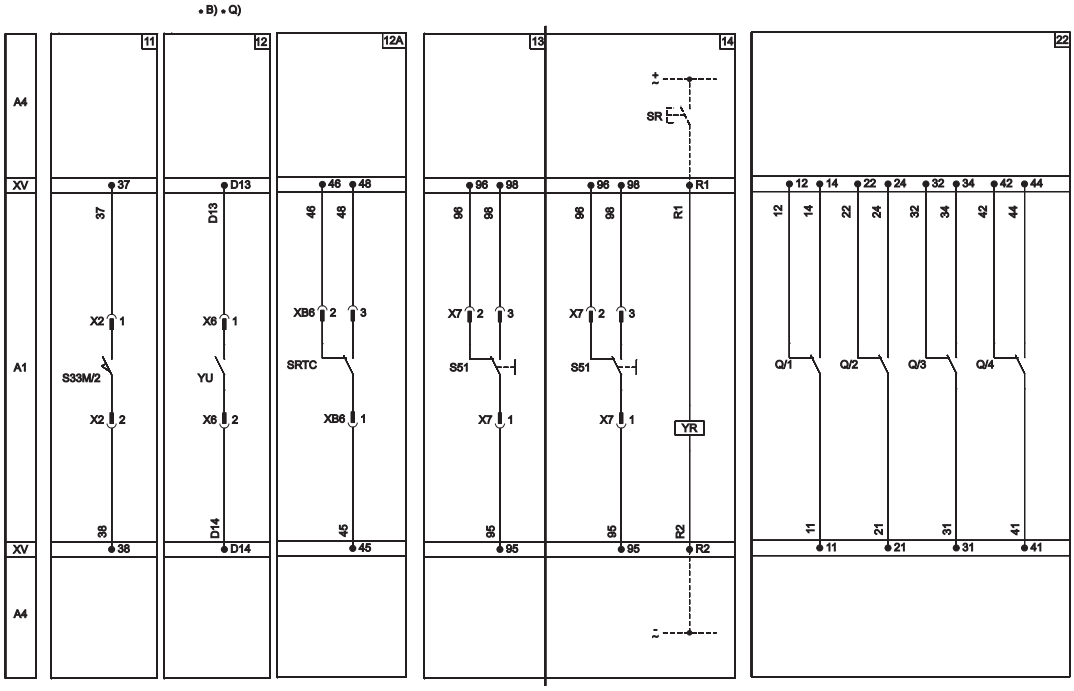

# Tmax molded case circuit breakers
## Wiring diagrams

### Auxiliary circuits of the PR331/P and PR332/P trip units

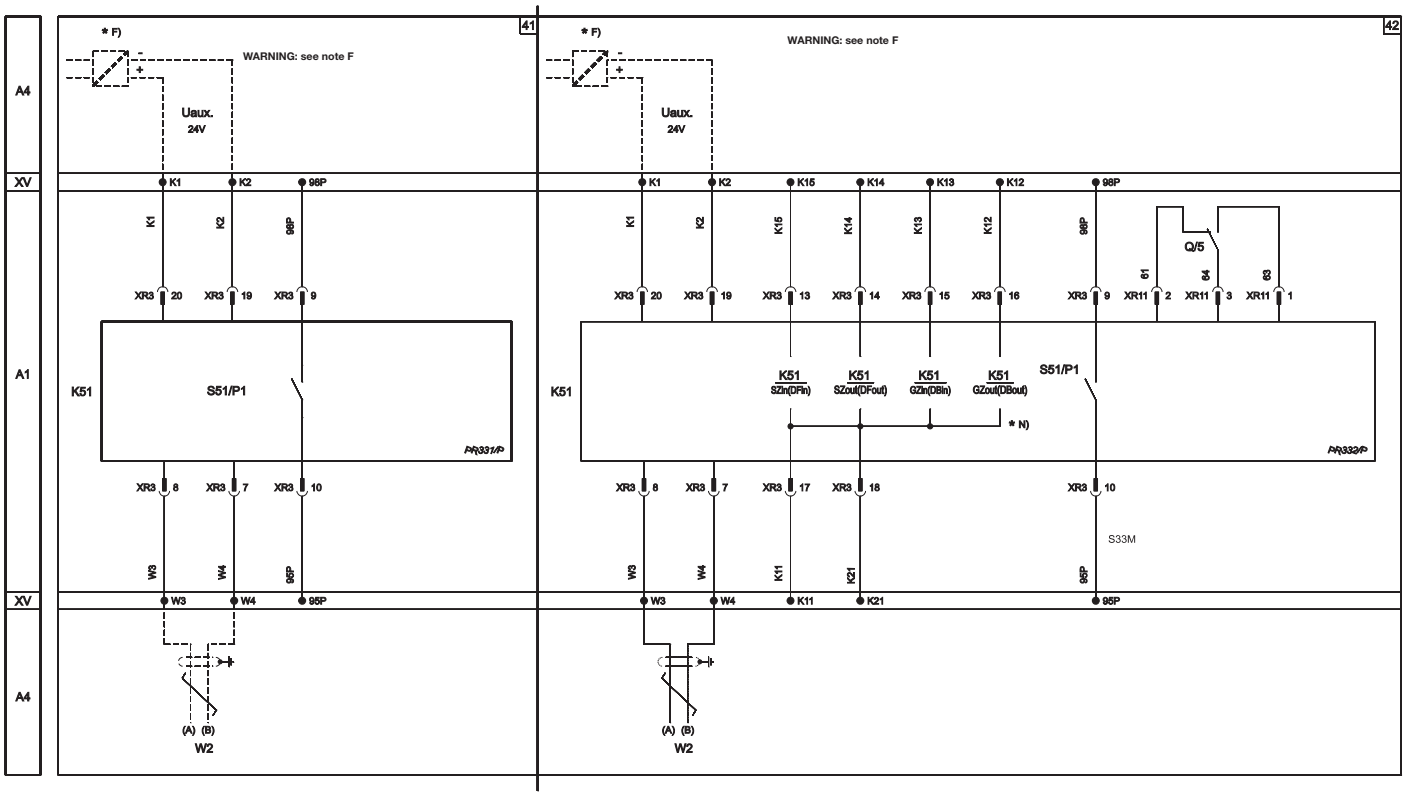


### Mesuring module PR330/V-T8

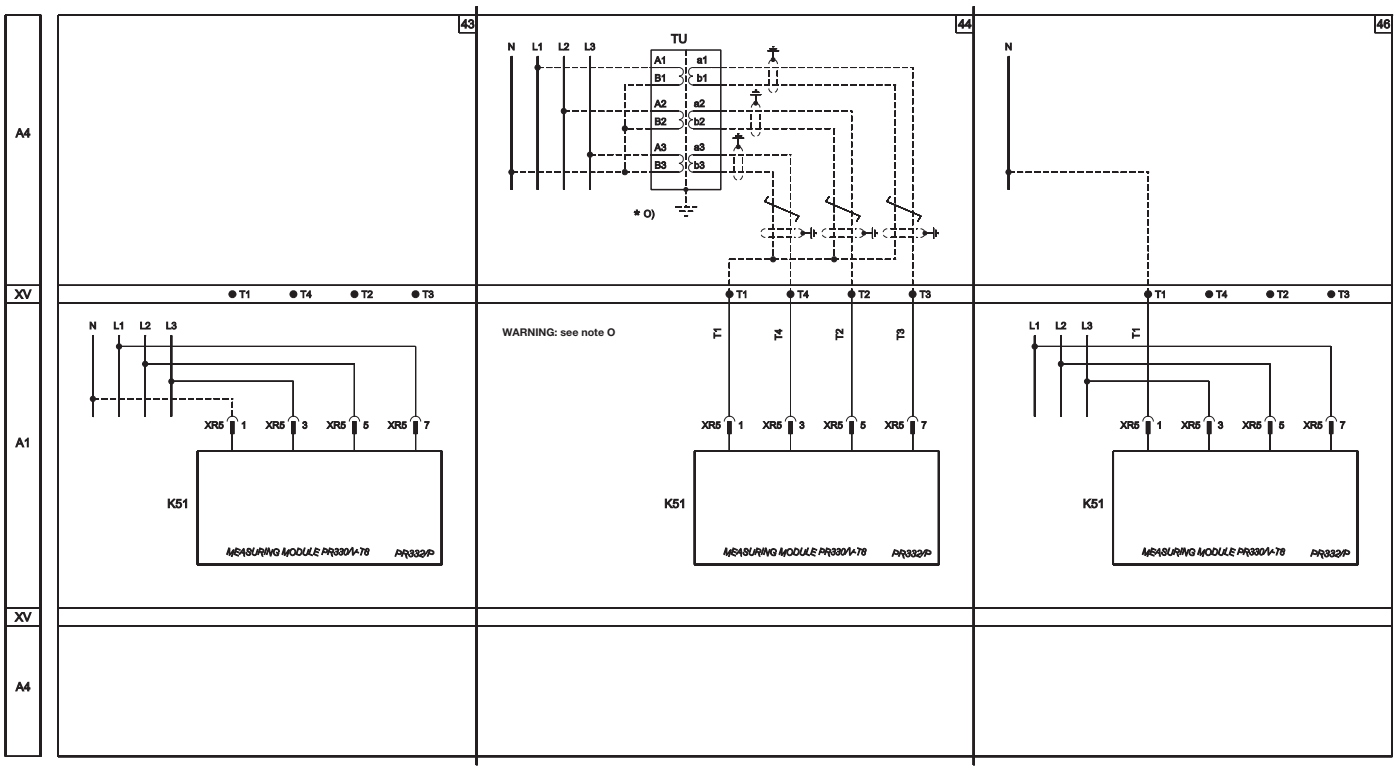

# Tmax molded case circuit breakers
## Wiring diagrams

### PR332/P trip unit equipped with PR330/R actuator unit and PR330/D-M dialog unit

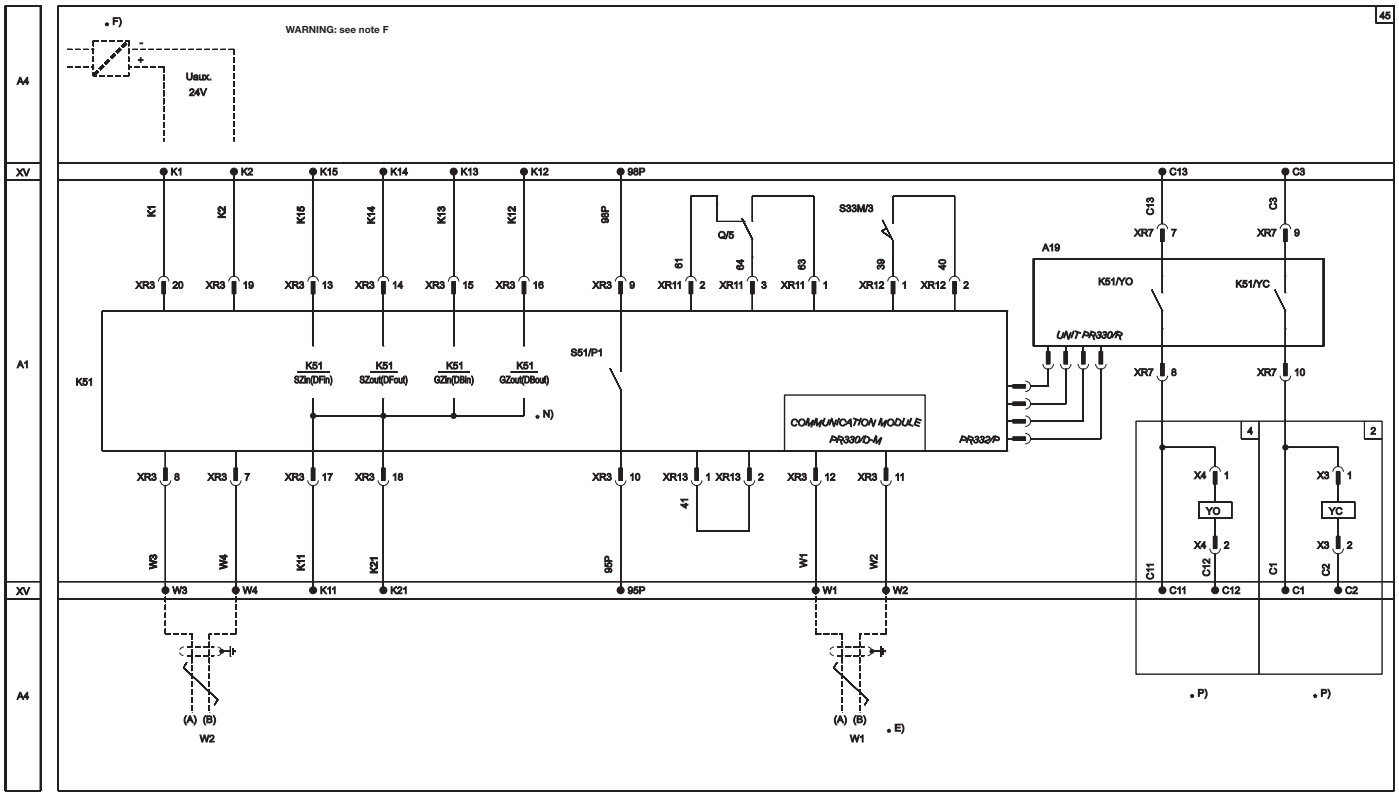

# Table of contents
## Overall dimensions

# Tmax molded case circuit breakers
## Overall dimensions

### T1 FIXED VERSION

**T1 1P (SINGLE-POLE)**
Without inserts

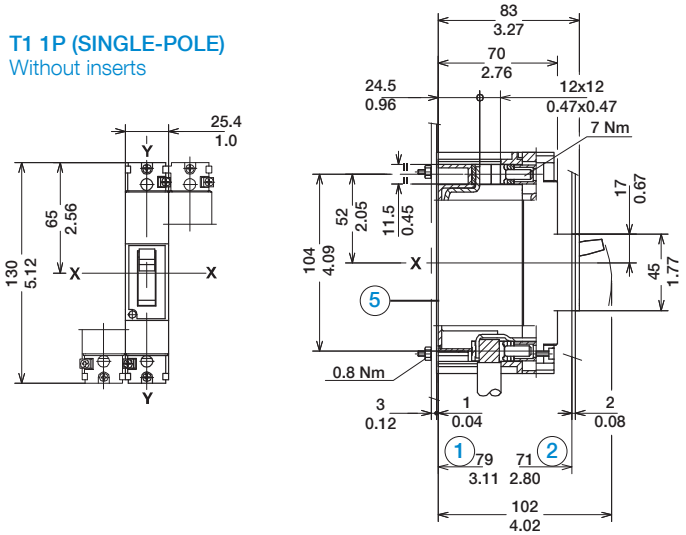


**T1 1P (SINGLE-POLE)**
With inserts

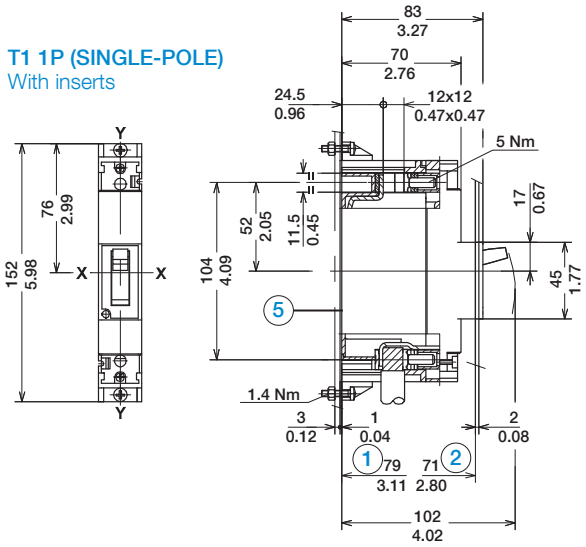


**T1 3P/4P**
Fixing on sheet

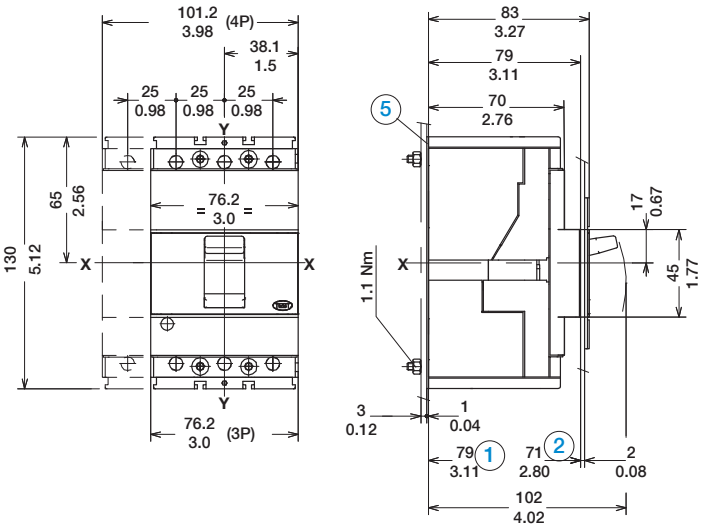


**T1 3P/4P**
Fixing on DIN rail

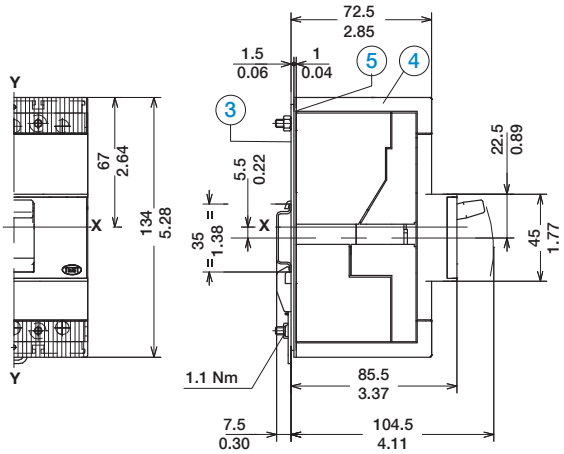


### Caption

1. Depth of the switchboard in the case of circuit breaker with face not extending from the compartment door, with or without flange
2. Depth of the switchboard in the case of circuit breaker with face extending from the compartment door, without flange
3. Bracket for fixing onto rail
4. Bottom terminal covers with IP40 degree of protection
5. Insulating plate

# Tmax molded case circuit breakers
## Overall dimensions

### TERMINALS
#### Front for CuAl cables (FC CuAl)

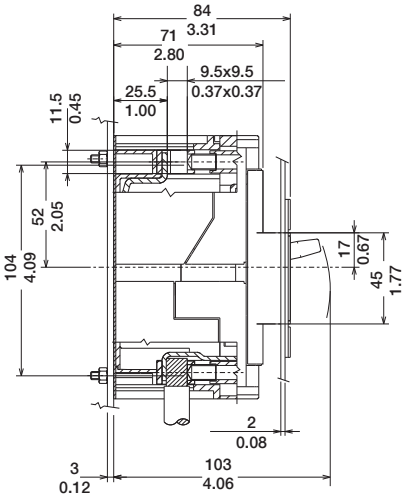


### DRILLING TEMPLATES
#### Support sheet

3 POLES

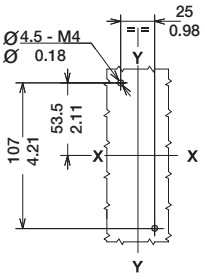


4 POLES

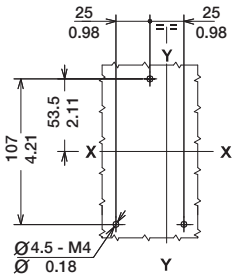


1P without inserts

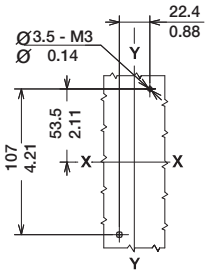


1P with inserts

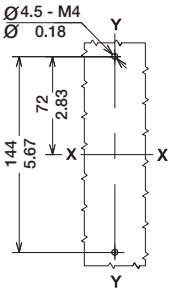


### DRILLING TEMPLATES
#### Compartment door

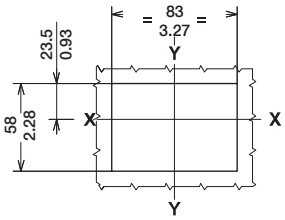


With flange and circuit breaker face flush with door (3-4 POLES)

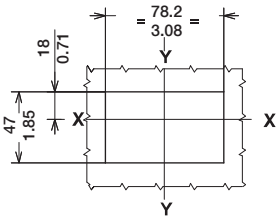


Without flange and circuit breaker face flush with door (3-4 POLES) or extending (3 POLES)

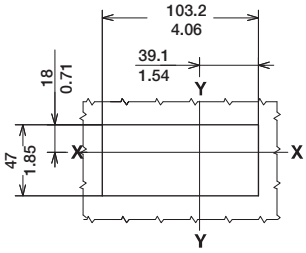


Without flange and circuit breaker face extending (4 POLES)

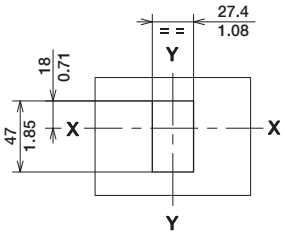


(SINGLE-POLE)

### Flange for the compartment door

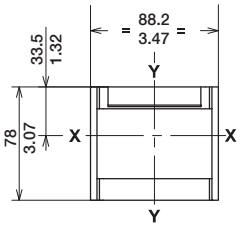

# Tmax molded case circuit breakers
# Overall dimensions

## T2 FIXED VERSION

**T2 3P/4P**
Fixing on sheet

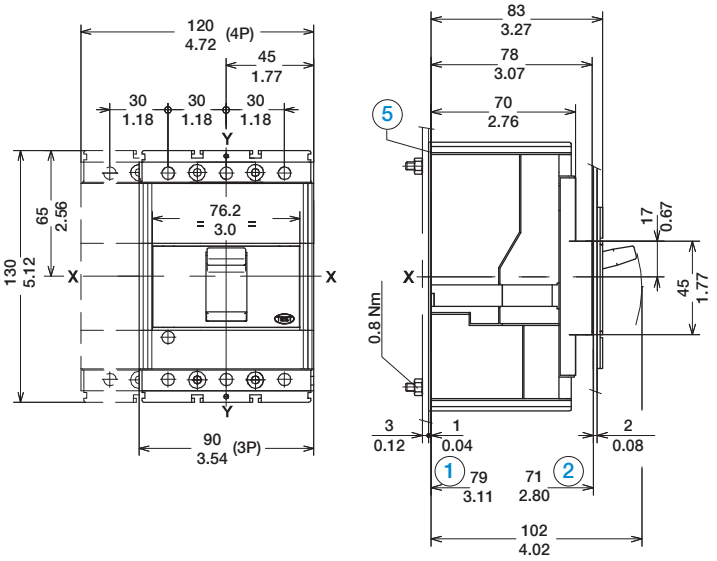


**T2 3P/4P**
Fixing on DIN rail

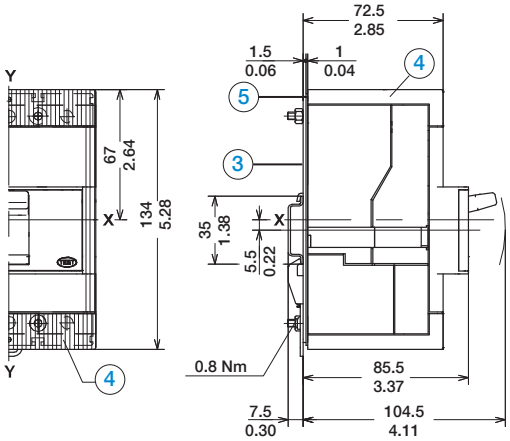


### Caption

1. Depth of the switchboard in the case of circuit breaker with face not extending from the compartment door, with or without flange
2. Depth of the switchboard in the case of circuit breaker with face extending from the compartment door, without flange
3. Bracket for fixing onto rail
4. Bottom terminal covers with IP40 degree of protection
5. Insulating plate

# Tmax molded case circuit breakers
## Overall dimensions

### TERMINALS

#### Front (F)

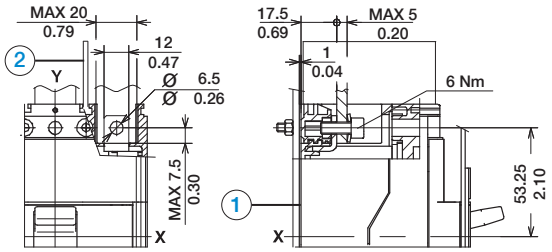


**Caption**

1. Insulating base plate (compulsory)
2. Insulating barriers between phases (compulsory)

#### Front for Cu cables (FC Cu)

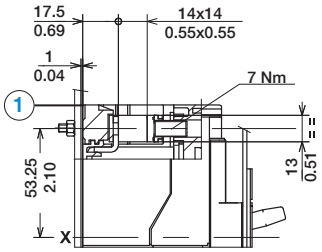


**Caption**

1. Insulating base plate (compulsory)

#### Front for CuAl cables (FC CuAl)

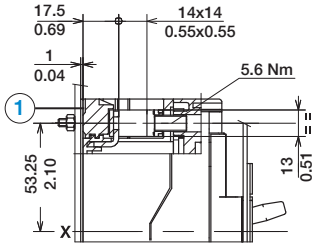


**Caption**

1. Insulating base plate (compulsory)

#### Front extended spread (ES)

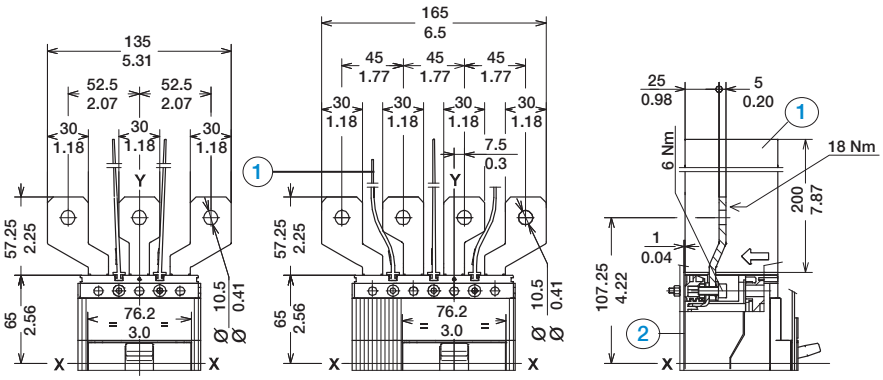


**Caption**

1. Insulating base plate (compulsory)
2. Insulating barriers between phases (compulsory)

# Tmax molded case circuit breakers
## Overall dimensions

### TERMINALS (continued)

#### Front extended (EF)

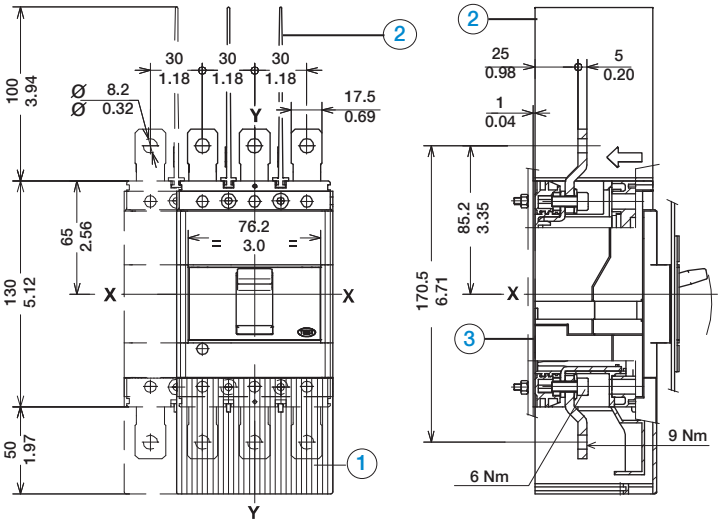


#### Caption

1. High terminal covers with IP40 protection degree
2. Insulating barriers between phases (compulsory without 1)
3. Insulating base plate (compulsory)

#### Rear (R)

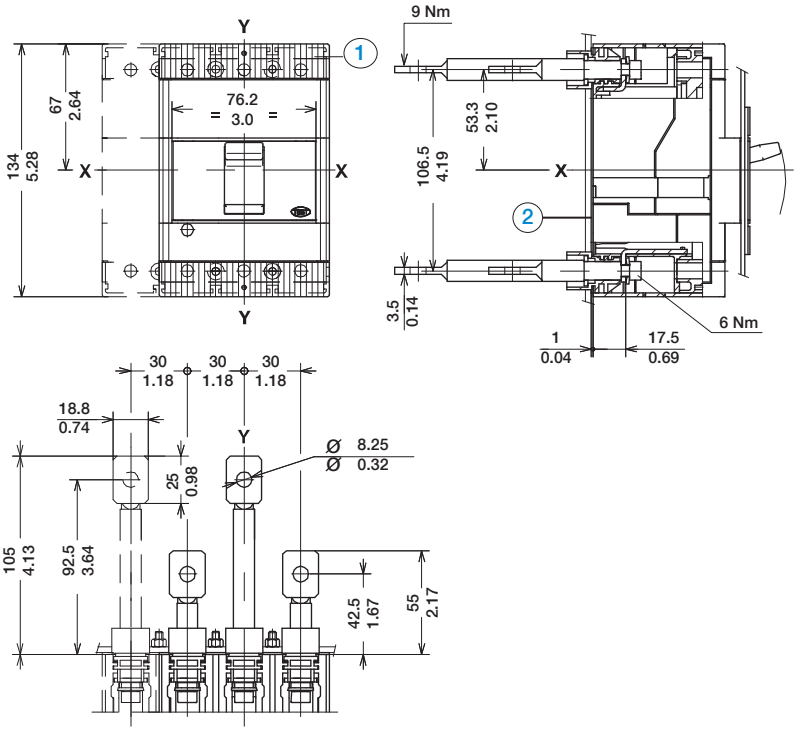


#### Caption

1. Low terminal covers with IP40 protection degree
2. Insulating plate

# Tmax molded case circuit breakers
# Overall dimensions

## DRILLING TEMPLATES
### Support sheet

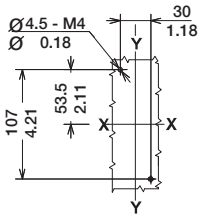


3 POLES
With front
terminals

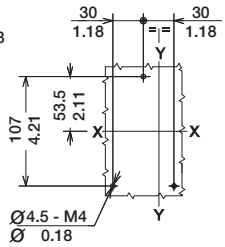


4 POLES
With front
terminals

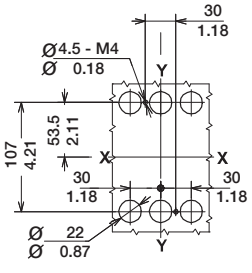


3 POLES
With rear
terminals

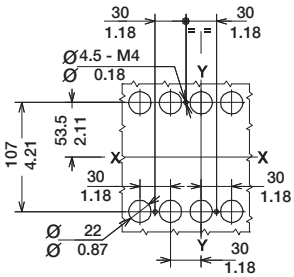


4 POLES
With rear
terminals

## DRILLING TEMPLATES
### Compartment door

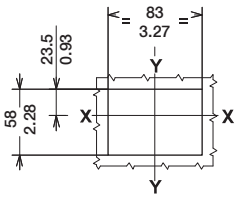


With flange and
circuit breaker face flush
with door (3-4 POLES)

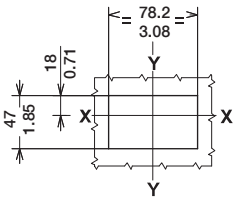


Without flange and
circuit breaker face flush
with door (3-4 POLES)
or extending (3 POLES)

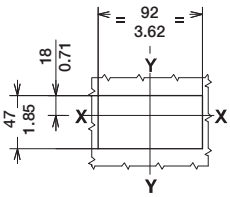


Without flange and
circuit breaker face
extending (3 POLES)

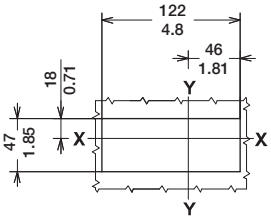


Without flange and
circuit breaker face
extending (4 POLES)

## Flange for the compartment door

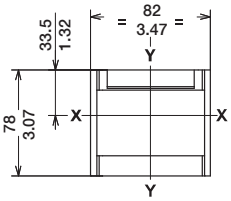

# Tmax molded case circuit breakers
## Overall dimensions

### T3 FIXED VERSION

**T3 3P/4P**
Fixing on sheet

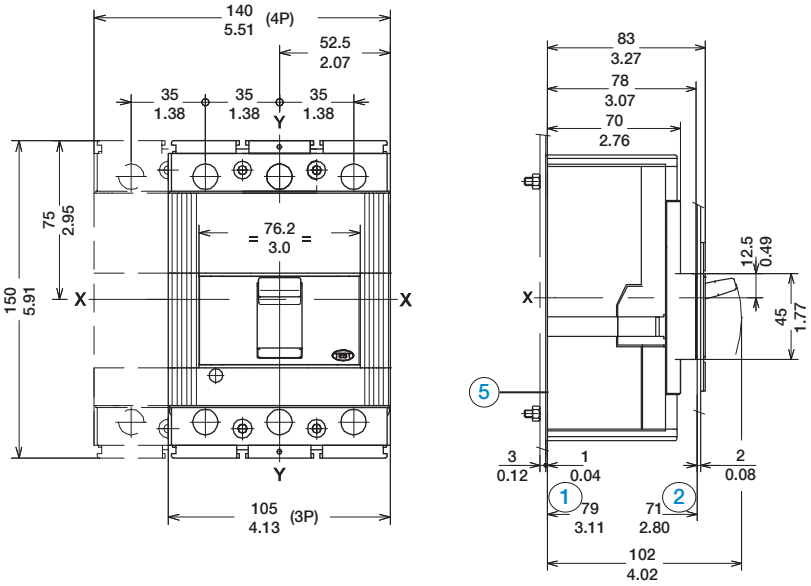


**T3 3P/4P**
Fixing on DIN rail

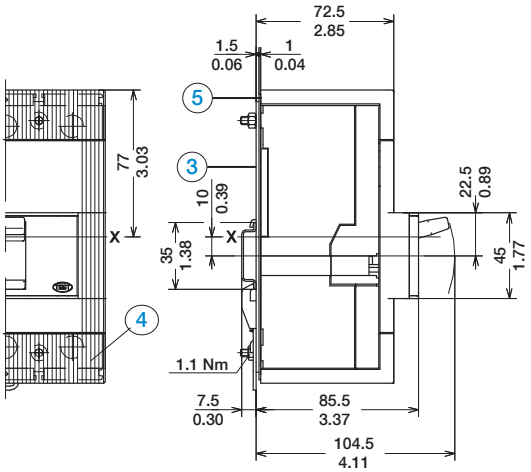


### Caption

1. Depth of the switchboard in the case of circuit breaker with face not extending from the compartment door, with or without flange
2. Depth of the switchboard in the case of circuit breaker with face extending from the compartment door, without flange
3. Bracket for fixing onto rail
4. Bottom terminal covers with IP40 degree of protection
5. Insulating plate

# Tmax molded case circuit breakers
## Overall dimensions

### TERMINALS
#### Front (F)

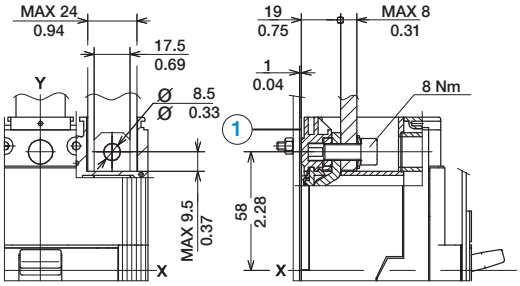


**Caption**

1 Insulating base plate (compulsory)

#### Front for Cu cables (FC Cu)

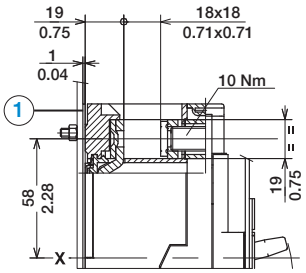


**Caption**

1 Insulating base plate (compulsory)

#### Front for CuAl cables (FC CuAl)

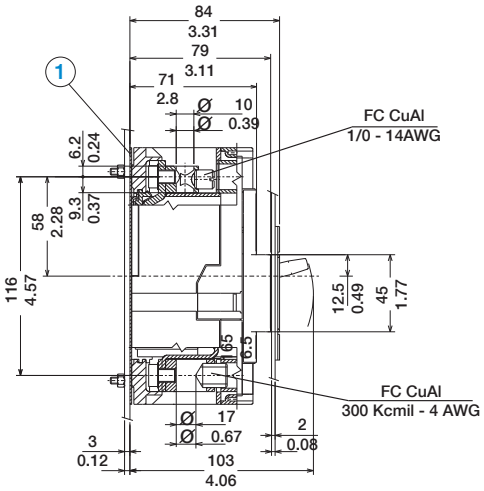


**Caption**

1 Insulating base plate (compulsory)

# Tmax molded case circuit breakers
## Overall dimensions

### TERMINALS (continued)
#### Front extended spread (ES)

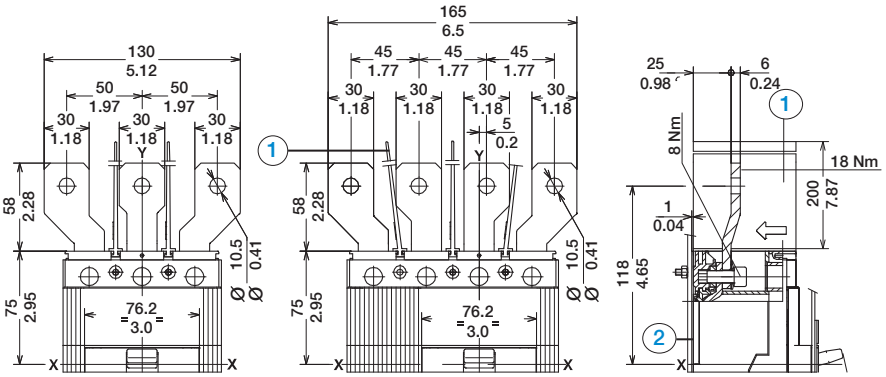


### Caption

1. Insulating barriers between phases (compulsory)
2. Insulating plate

#### Front extended (EF)

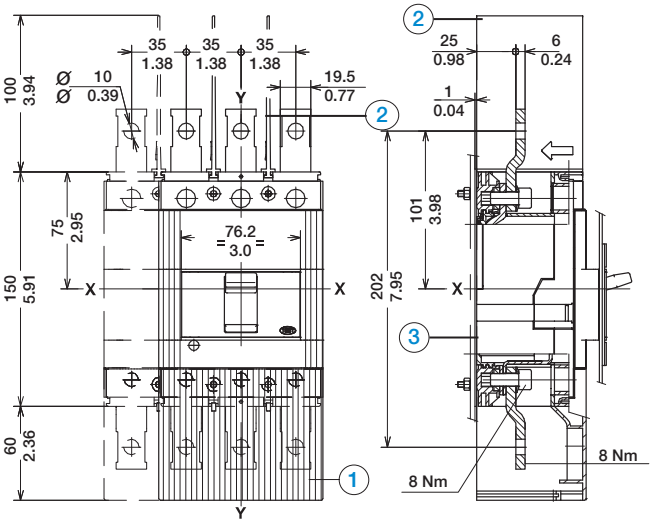


### Caption

1. High terminal covers with IP40 protection degree
2. Insulating barriers between phases (compulsory without 1)
3. Insulating plate

# Tmax molded case circuit breakers
## Overall dimensions

### TERMINALS (continued)
#### Rear (R)

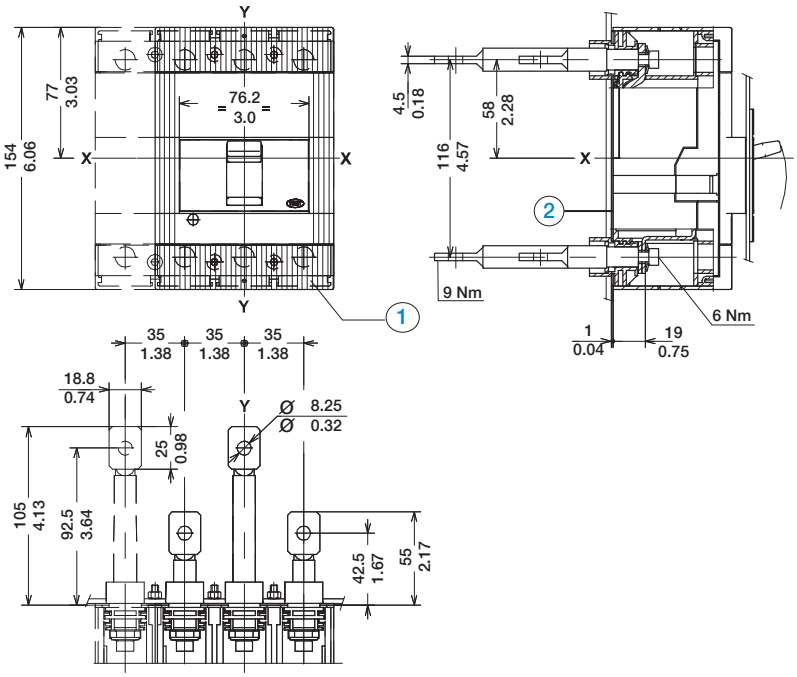


### Caption

1. Low terminal covers with IP40 protection degree
2. Insulating base plate

# Tmax molded case circuit breakers
# Overall dimensions

## DRILLING TEMPLATES
### Support sheet

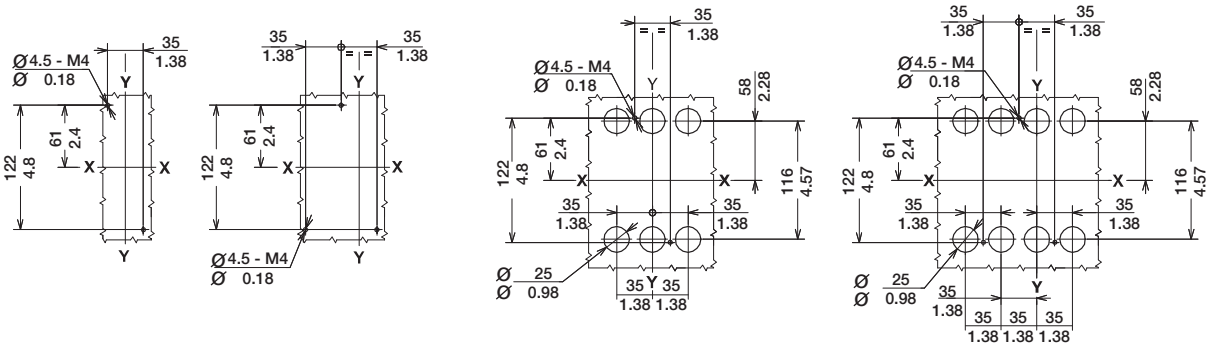


3 POLES
With front terminals

4 POLES
With front terminals

3 POLES
With rear terminals

4 POLES
With rear terminals

## DRILLING TEMPLATES
### Compartment door

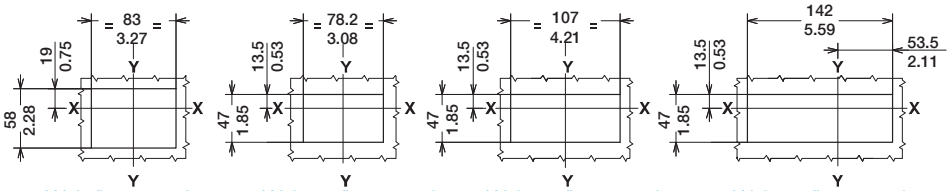


With flange and circuit breaker face flush with door (3-4 POLES)

Without flange and circuit breaker face flush with door (3-4 POLES) or extending (3 POLES)

Without flange and circuit breaker face extending (3 POLES)

Without flange and circuit breaker face extending (4 POLES)

## Flange for the compartment door

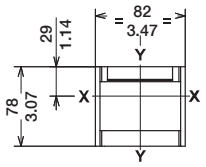

# Tmax molded case circuit breakers
## Overall dimensions

### Ts3 FIXED VERSION

**Ts3 3P/4P**
Fixing on sheet

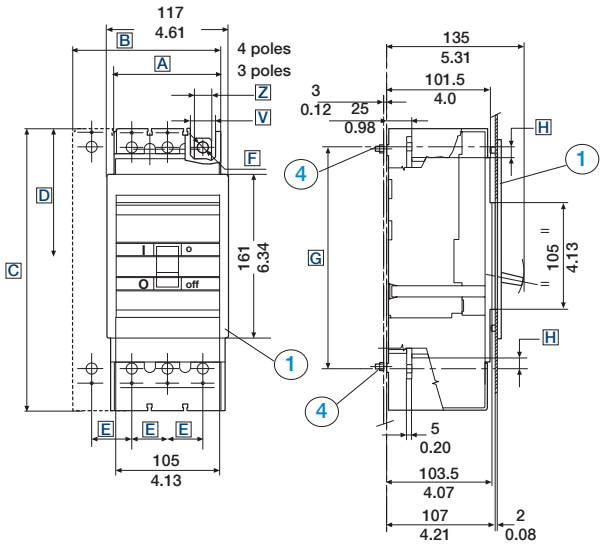


**Ts3 3P/4P**
Fixing on DIN rail

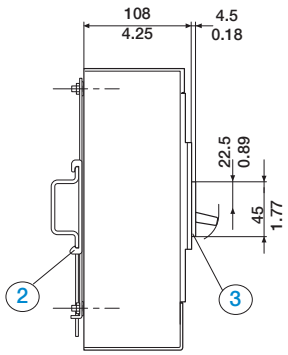


| Letter | A | B | C | D | E | F | G | H | I | L | V | Z |
|---|---|---|---|---|---|---|---|---|---|---|---|---|
| mm | 105 | 140 | 170 | 87.25 | 35 | Ø 8 | 143 | 10 | 73.75 | 18x18 | 24 | 17.5 |
| in | 4.13 | 5.51 | 6.69 | 3.44 | 1.38 | Ø 0.31 | 5.63 | 0.39 | 2.90 | 0.71x0.71 | 0.94 | 0.69 |

### Caption

1. Flange for compartment door
2. DIN rail bracket (75mm DIN)
3. 1,77 in (45mm) front flange
4. Tightening torque 2 Nm

# Tmax molded case circuit breakers
# Overall dimensions

## TERMINALS

### Front (F)

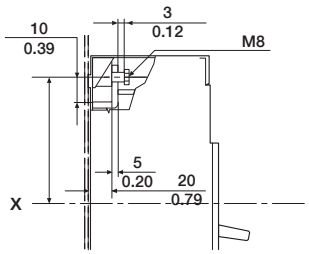


### Front for CuAl cables (FC CuAl)

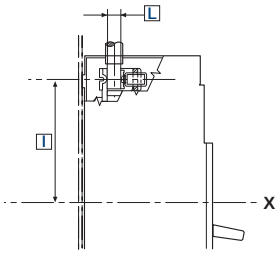


### Front extended spread (ES)

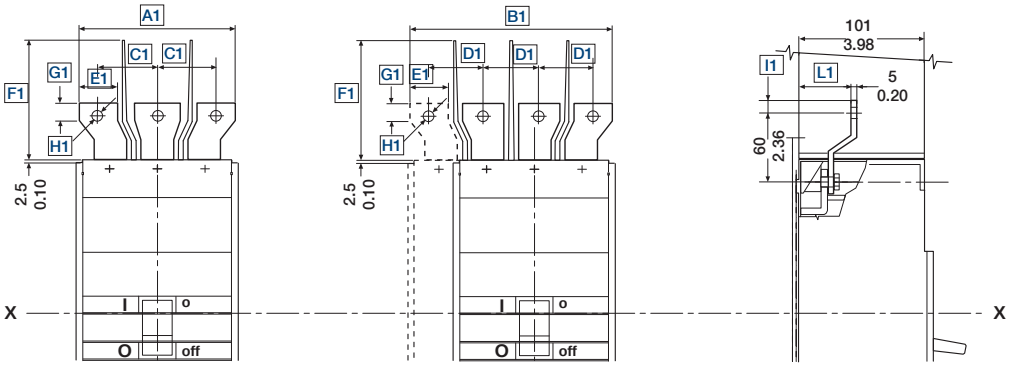


| Letter | I | L | A1 | B1 | C1 | D1 | E1 | F1 | G1 | H1 | I1 | L1 |
|---|---|---|---|---|---|---|---|---|---|---|---|---|
| mm | 73.75 | Ø 16 | 130 | 165 | 50 | 45 | 30 | 155 | ... | Ø 8.5 | 12.5 | 45 |
| in | 2.90 | Ø 0.63 | 5.12 | 6.50 | 1.97 | 1.77 | 1.18 | 6.10 | ... | Ø 0.33 | 0.49 | 1.77 |

# Tmax molded case circuit breakers
## Overall dimensions

### TERMINALS (continued)

#### Front extended (EF)

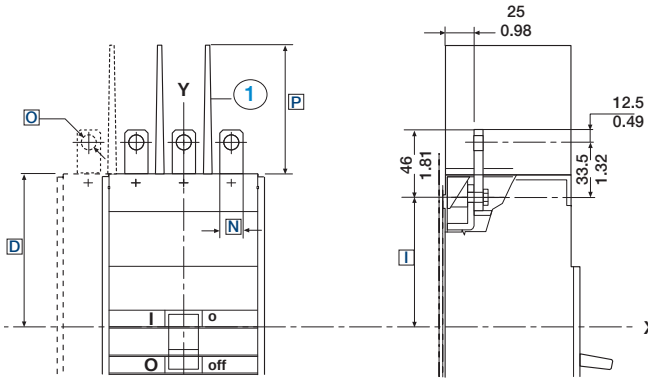


**Caption**

1 Separator plates between the phases (to order)

#### Rear for CuAl cables

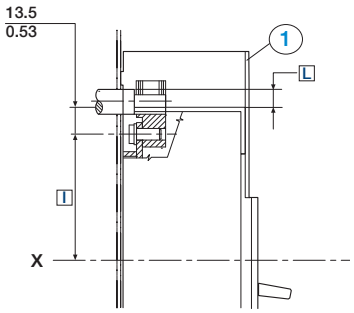


**Caption**

1 High terminal covers included in supply

#### Rear threaded (R)

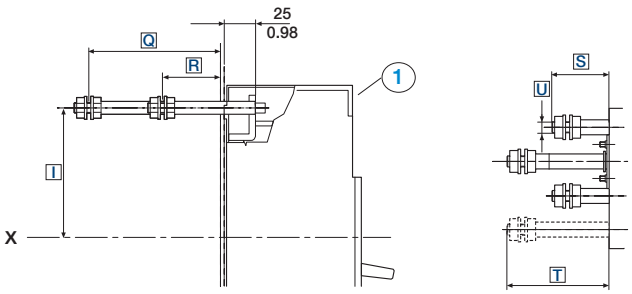


**Caption**

1 Low terminal covers included in supply

| Letter | D | I | L | N | O | P | Q | R | S | T | U |
|---|---|---|---|---|---|---|---|---|---|---|---|
| mm | 87.25 | 73.75 | Ø 16 | 20 | Ø 8.5 | 100 | 81.5 | 36.5 | 55 | 100 | M12 |
| in | 3.44 | 2.90 | Ø 0.63 | 0.79 | Ø 0.33 | 3.94 | 3.21 | 1.44 | 2.17 | 3.94 | M12 |

# Tmax molded case circuit breakers
## Overall dimensions

### DRILLING TEMPLATES
**Support sheet (minimum thickness of sheet metal 0.12” / 3mm)**

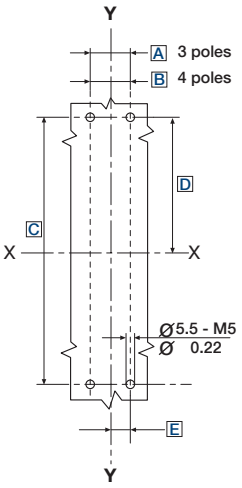


For front terminals and extended front terminals

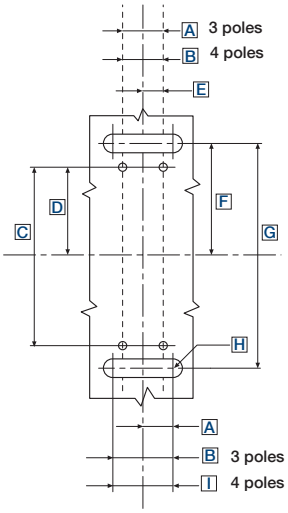


For rear terminals (CuAl)

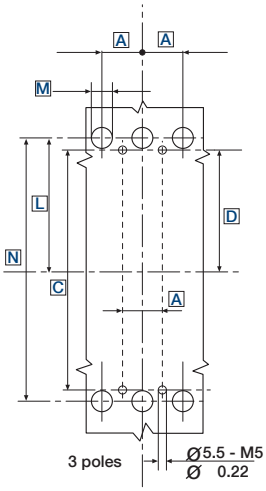


For rear threaded terminals 3 pole

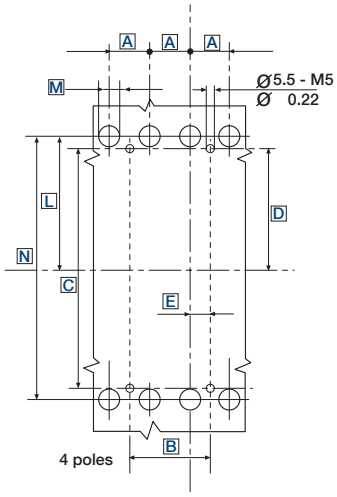


For rear threaded terminals 4 pole

### DRILLING TEMPLATES
**Compartment door (minimum thickness of sheet metal 0.08” / 2mm)**

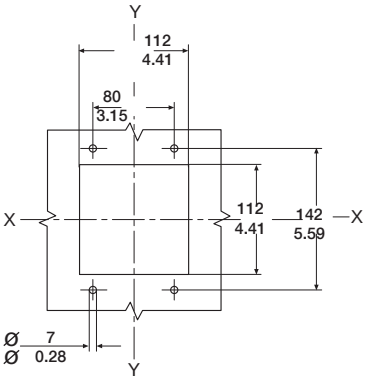


| Letter | A | B | C | D | E | F | G | H | I | L | M | N |
|---|---|---|---|---|---|---|---|---|---|---|---|---|
| mm | 35 | 70 | 139 | 71.75 | 17.5 | 94.75 | 185 | R15 | 105 | 73.75 | Ø 24 | 143 |
| in | 1.38 | 2.76 | 5.47 | 2.82 | 0.69 | 3.73 | 7.28 | R0.59 | 4.13 | 2.90 | Ø 0.94 | 5.63 |

# Tmax molded case circuit breakers
# Overall dimensions

## T4 FIXED VERSION

**T4 3P/4P**
Fixing on sheet

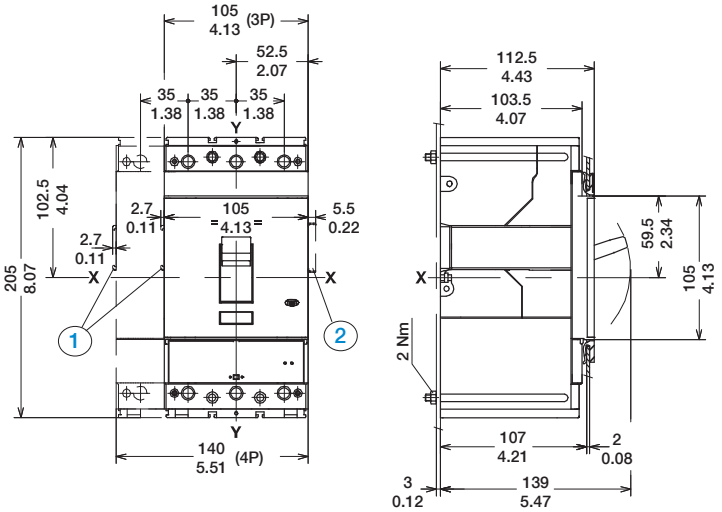


### Caption

1. Overall dimensions with cabled accessories mounted (SOR-C, UVR-C)
2. Overall dimensions with cabled auxiliary contacts mounted (only 3Q+1SY)

# Tmax molded case circuit breakers
# Overall dimensions

## TERMINALS

### Front (F)

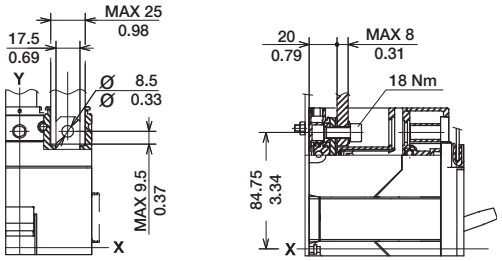


### Front for Cu cables (FC Cu)

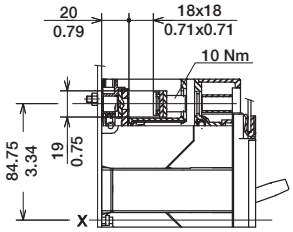


### Front for CuAl cables (FC CuAl)

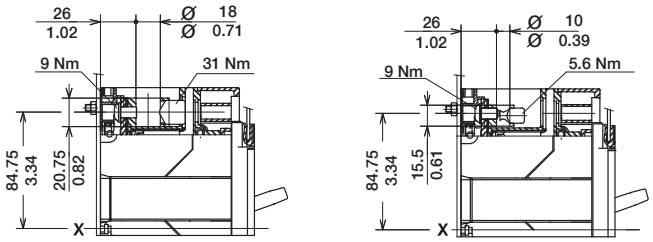


### Front extended spread (ES)

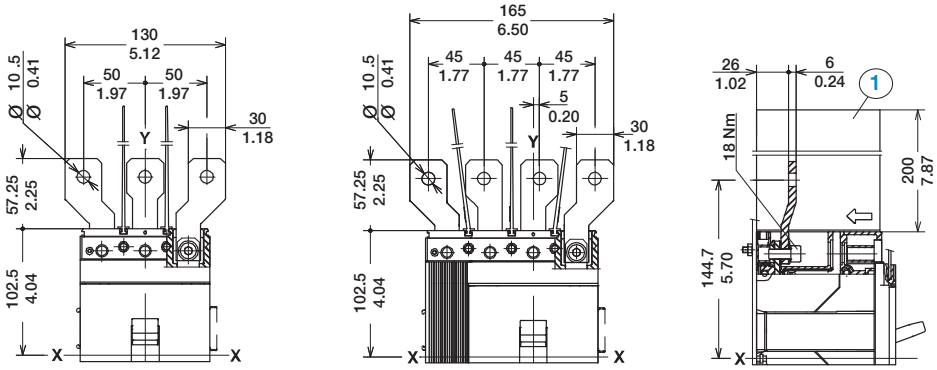


### Caption

1 Insulating barriers between phases (compulsory)

# Tmax molded case circuit breakers
## Overall dimensions

### TERMINALS (continued)
#### Front extended (EF)

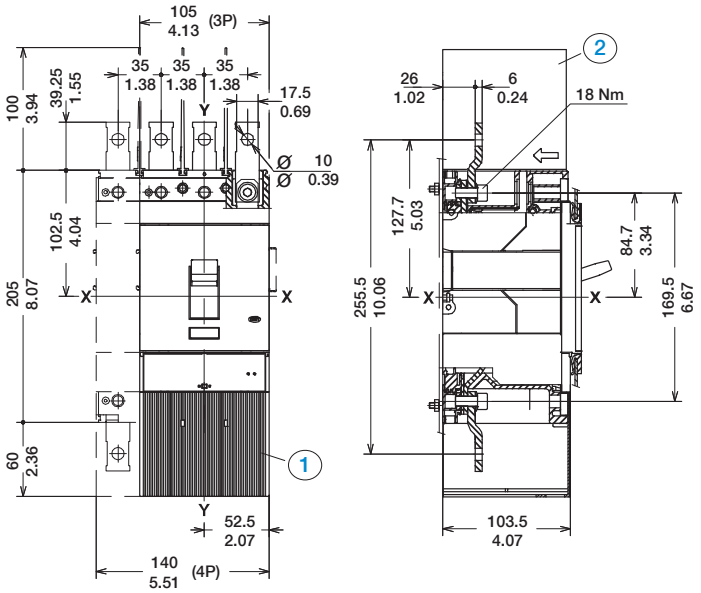


### Caption

1. High terminal covers with IP40 protection degree
2. Insulating barriers between phases (compulsory without 1)

#### Rear (R)

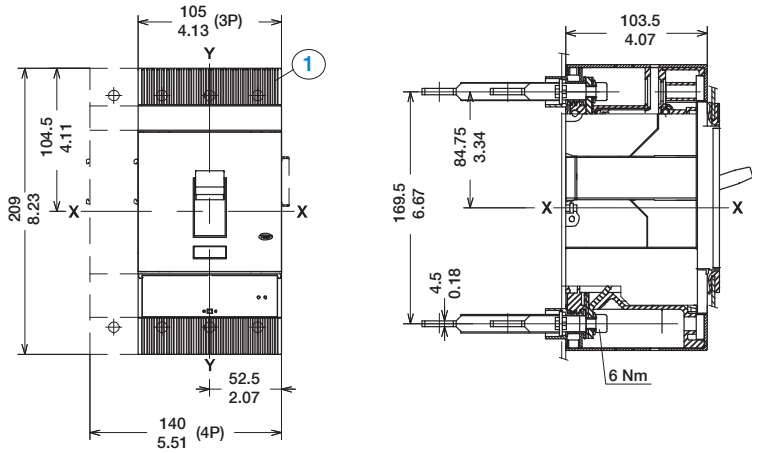


### Caption

1. Low terminal covers with IP40 protection degree

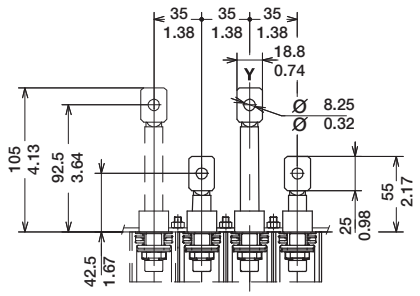

# Tmax molded case circuit breakers
# Overall dimensions

## DRILLING TEMPLATES
### Support sheet

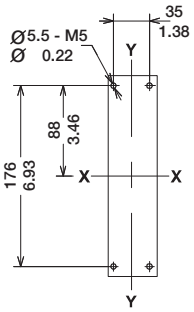


3 POLES
With front
terminals

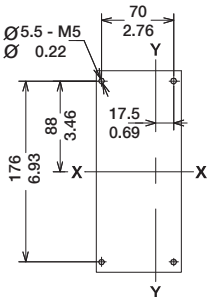


4 POLES
With front
terminals

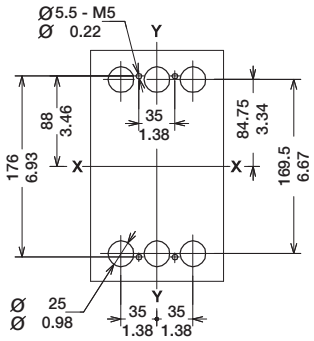


3 POLES
With rear
terminals

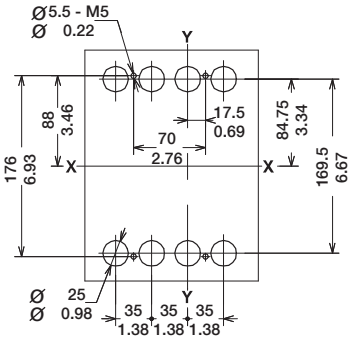


4 POLES
With rear
terminals

## DRILLING TEMPLATES
### Compartment door

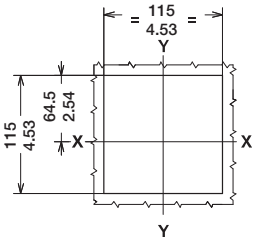


3 -4 POLE
With flange

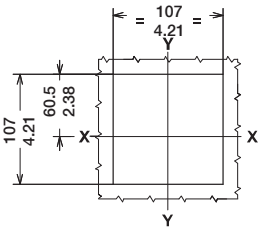


3 -4 POLE
Without flange

## Flange for the compartment door

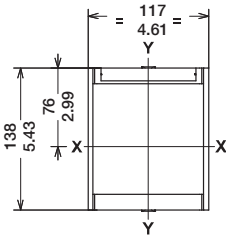

# Tmax molded case circuit breakers
# Overall dimensions

## T5 (400) FIXED VERSION

**T5 (400) 3P/4P**
Fixing on sheet

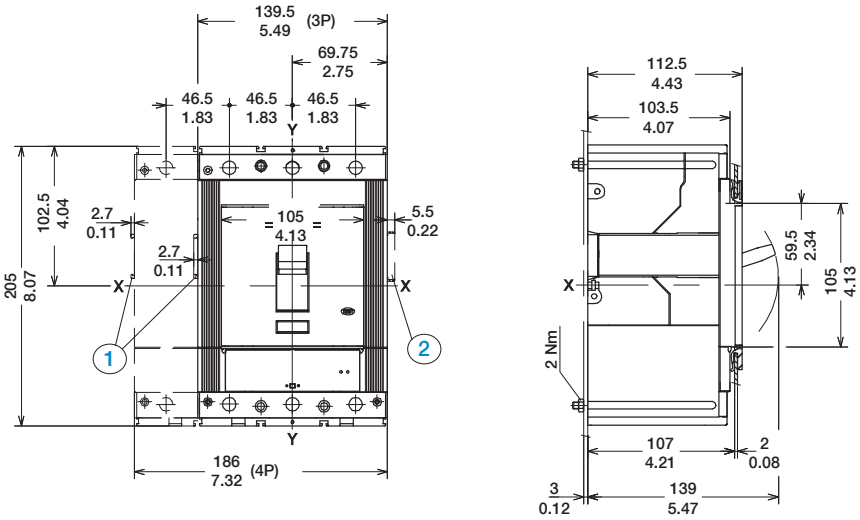


## Caption

1. Overall dimensions with cabled accessories mounted (SOR-C, UVR-C)
2. Overall dimensions with cabled auxiliary contacts mounted (only 3Q+1SY)

# Tmax molded case circuit breakers
# Overall dimensions

## TERMINALS

### Front (F)

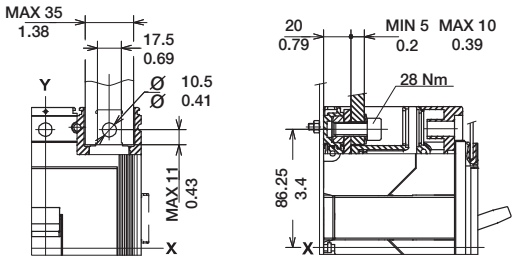


### Front for Cu cables (FC Cu)

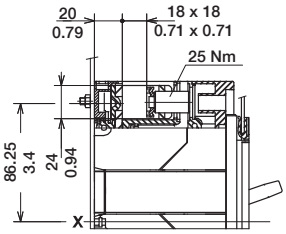


### Front for CuAl cables (FC CuAl)

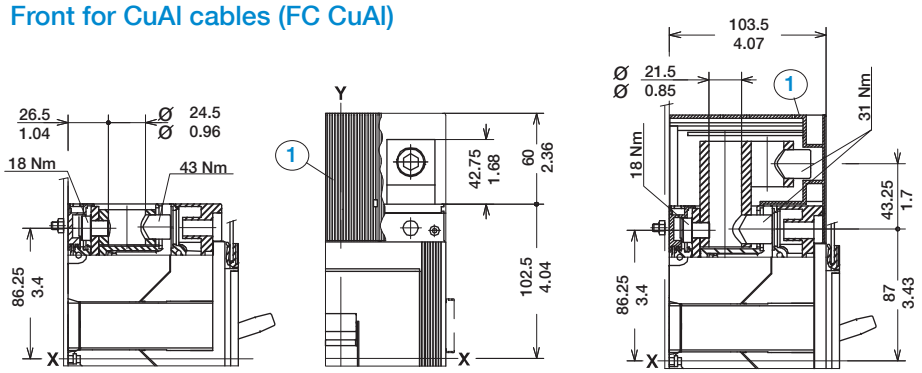


**Caption**

(1) High terminal covers with IP40 protection degree

### Front extended spread (ES)

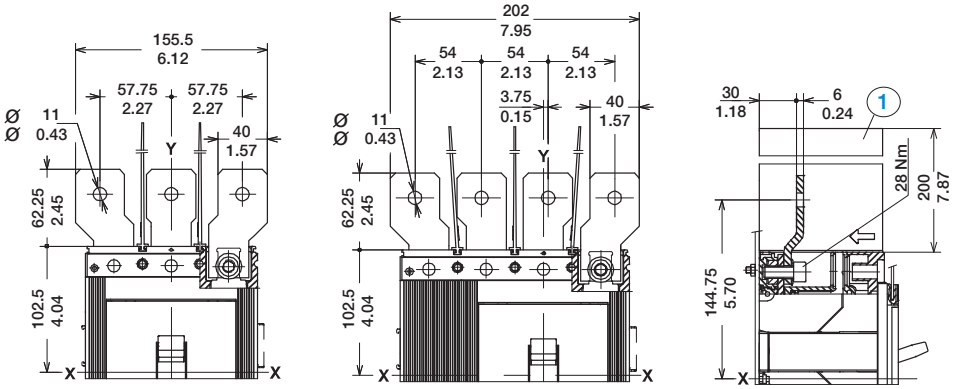


**Caption**

(1) Insulating barriers between phases (compulsory)

# Tmax molded case circuit breakers
## Overall dimensions

### TERMINALS (continued)
#### Front extended (EF)

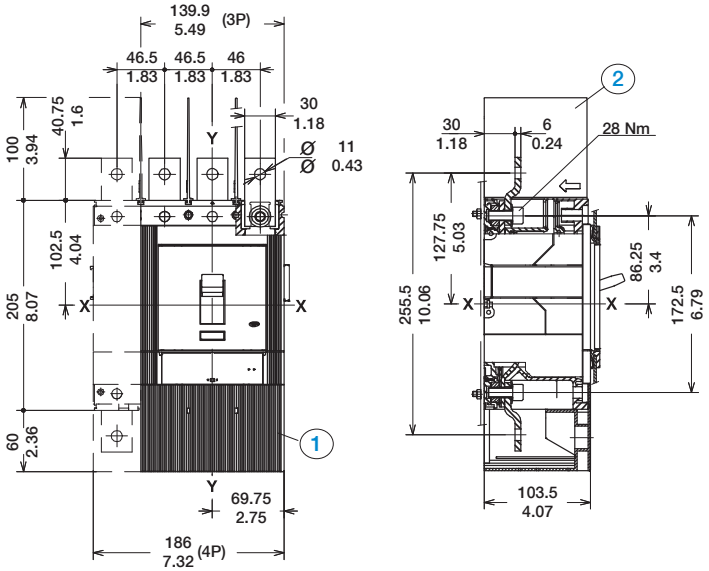


### Caption

1. High terminal covers with IP40 protection degree
2. Insulating barriers between phases (compulsory without 1)

#### Rear (R)

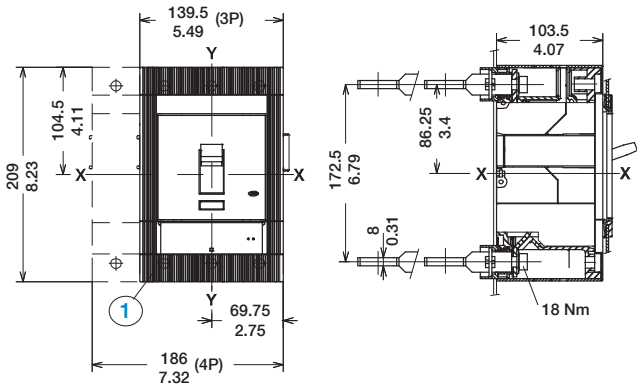


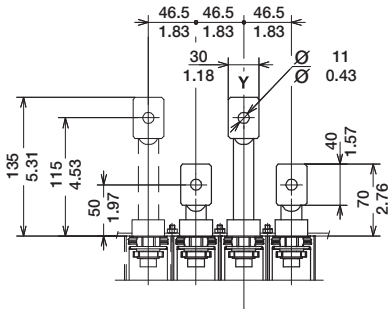


### Caption

1. Low terminal covers with IP40 protection degree

# Tmax molded case circuit breakers
# Overall dimensions

## DRILLING TEMPLATES
### Support sheet

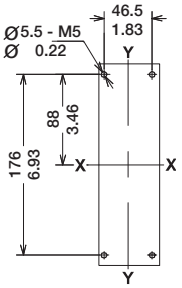


3 POLES
With front
terminals

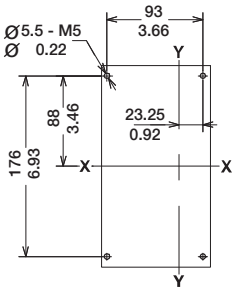


4 POLES
With front
terminals

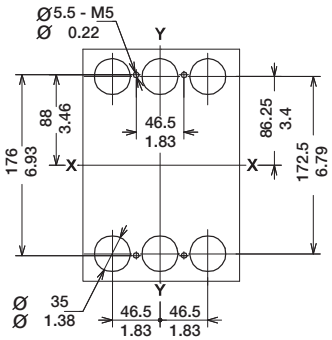


3 POLES
With rear
terminals

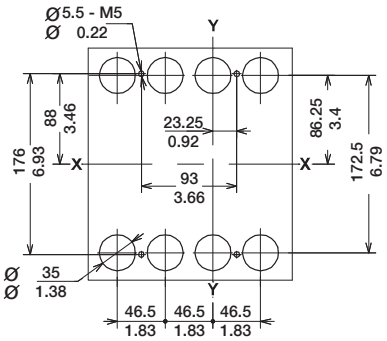


4 POLES
With rear
terminals

## DRILLING TEMPLATES
### Compartment door

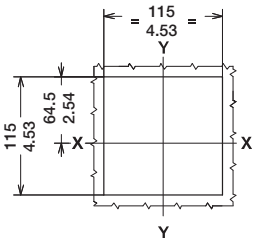


3 -4 POLE
With flange

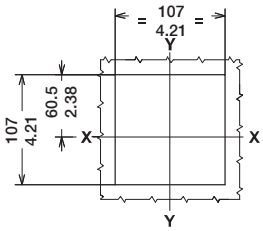


3 -4 POLE
Without flange

## Flange for the compartment door

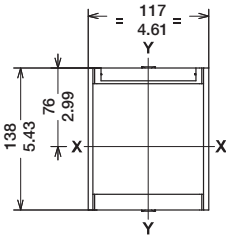

# Tmax molded case circuit breakers
## Overall dimensions

### T5 (600) FIXED VERSION

**T5 (600) 3P**
Fixing on sheet

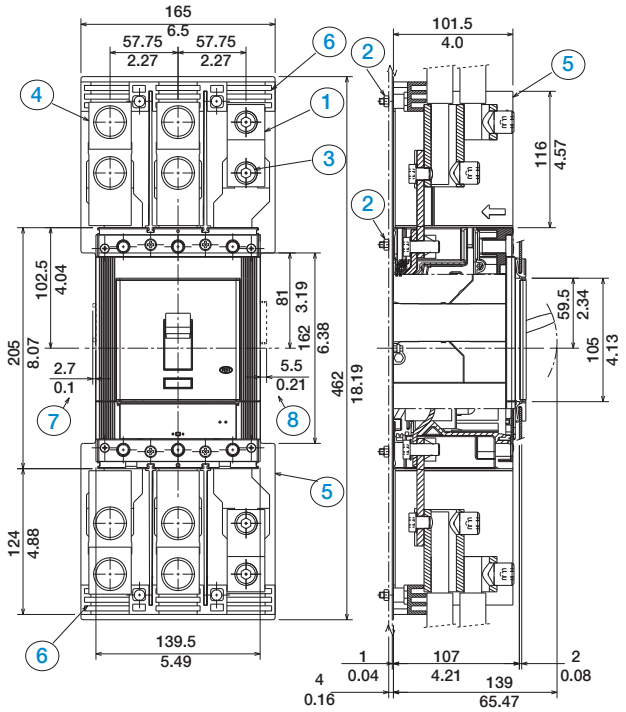


### Caption

1. Low terminal covers with IP40 protection degree
2. Tightening torque 2 Nm
3. Tightening torque 31 Nm
4. Terminal cover
5. Insulating barrier + insulating plate
6. Terminals support
7. Spacing when equipped with SOR, UVR
8. Spacing when equipped with AUX (3Q+1SY only)

# Tmax molded case circuit breakers
# Overall dimensions

## DRILLING TEMPLATES
### Support sheet

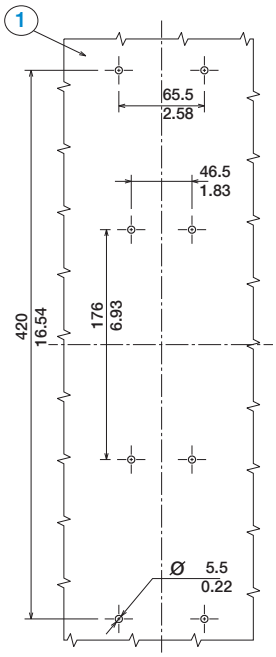


### Caption

1 Fixing on sheet steel

## DRILLING TEMPLATES
### Compartment door

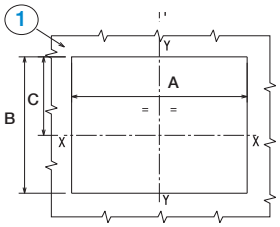


| | | With flange | Without flange |
|---|---|---|---|
| A | mm | 115 | 107 |
| | in | 4.53 | 4.21 |
| B | mm | 115 | 107 |
| | in | 4.53 | 4.21 |
| C | mm | 64.5 | 60.5 |
| | in | 2.54 | 2.38 |

### Caption

1 Compartment door sheet steel drilling

## Flange for the compartment door

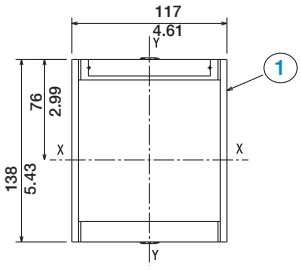


### Caption

1 Flange for the compartment door

# Tmax molded case circuit breakers
# Overall dimensions

## T6 FIXED VERSION

**T6 3P/4P**
Fixing on sheet

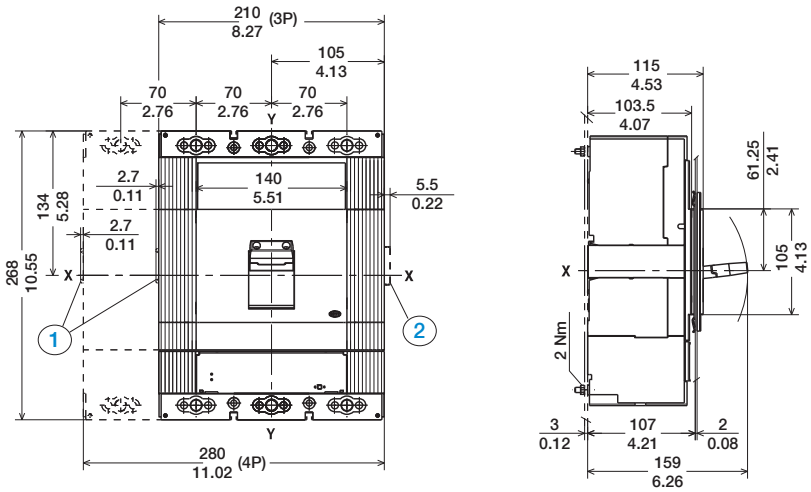


### Caption

1. Overall dimensions with cabled accessories mounted (SOR-C, UVR-C)
2. Overall dimensions with cabled auxiliary contacts mounted (only 3Q+1SY)

# Tmax molded case circuit breakers
## Overall dimensions

### TERMINALS

#### Front (F)

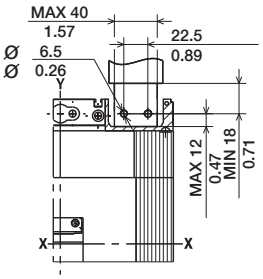


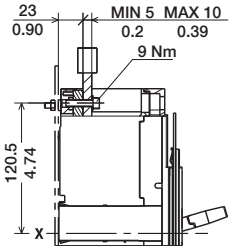


#### Front for CuAl cables (FC CuAl)

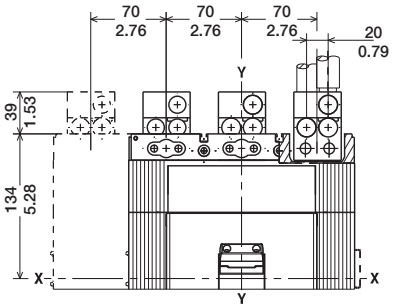


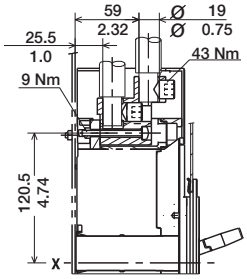


#### Front extended spread (ES)

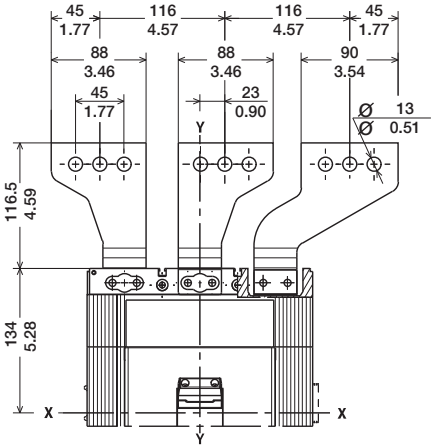


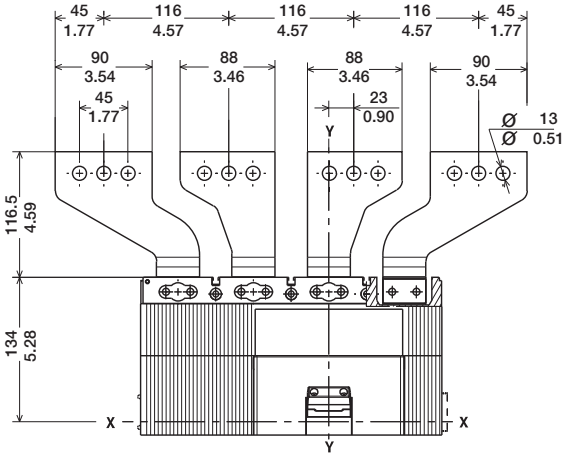


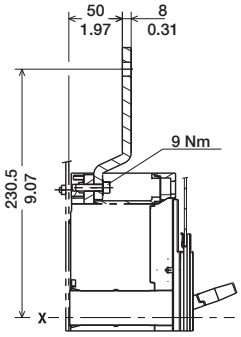

# Tmax molded case circuit breakers
## Overall dimensions

### TERMINALS (continued)

#### Front extended (EF)

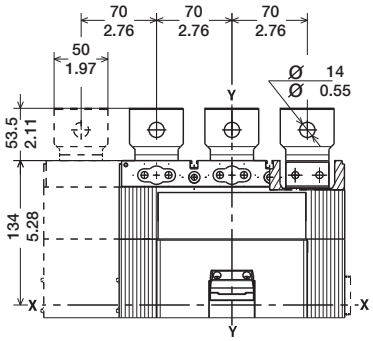


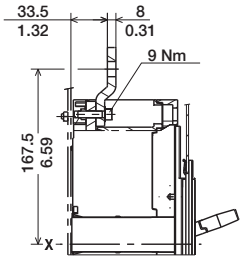


#### Rear for CuAl cables

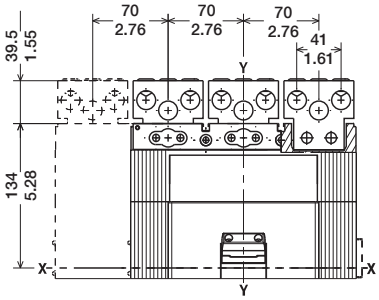


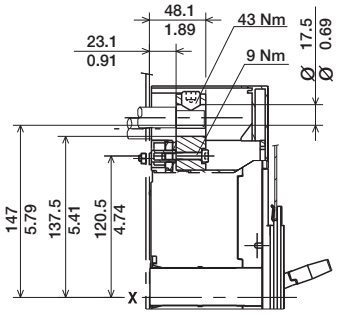


#### Rear (R)

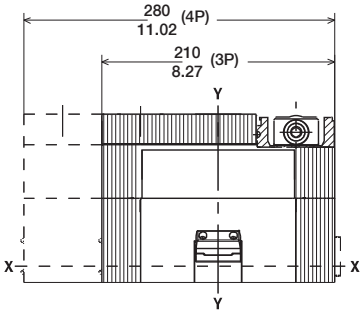


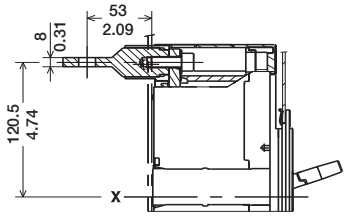


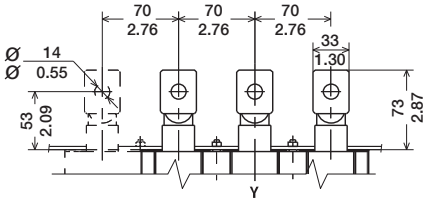


3-4 POLES Horizontally oriented

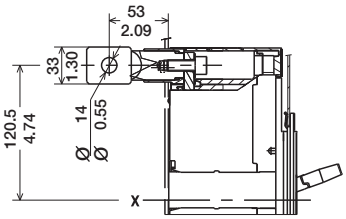


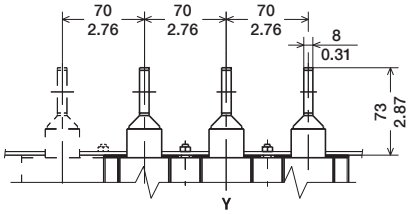


3-4 POLES Vertically oriented

# Tmax molded case circuit breakers
## Overall dimensions

### DRILLING TEMPLATES
#### Support sheet

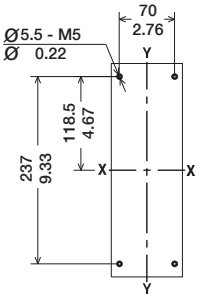


3 POLES
With front terminals

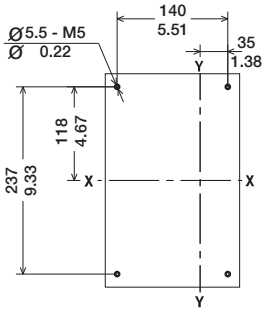


4 POLES
With front terminals

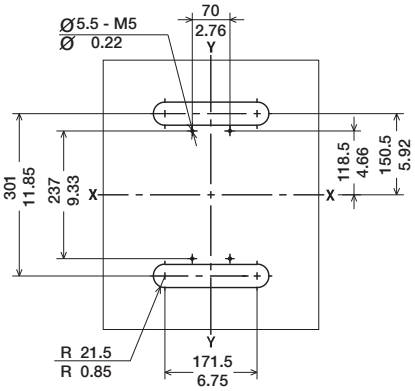


3 POLES
With rear terminals for CuAl cables

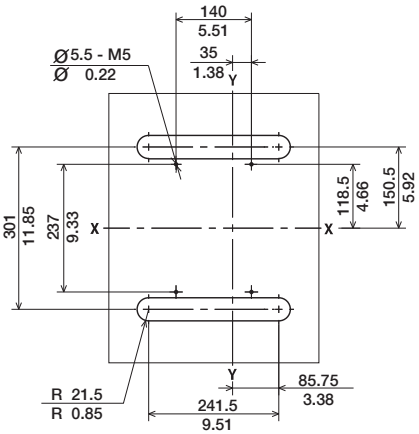


4 POLES
With rear terminals for CuAl cables

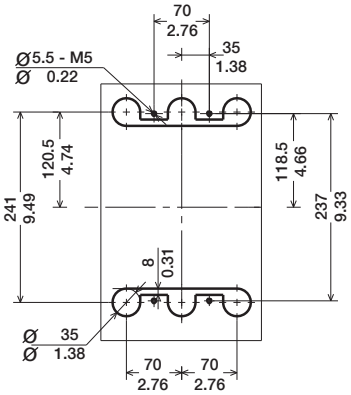


3 POLES
With rear terminals

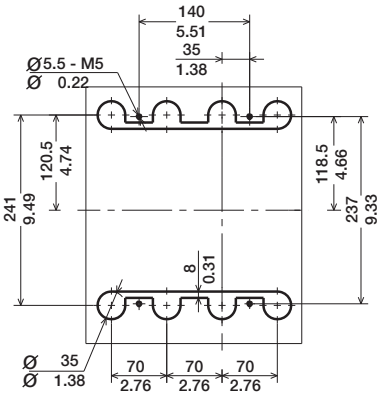


4 POLES
With rear terminals

### DRILLING TEMPLATES
#### Compartment door

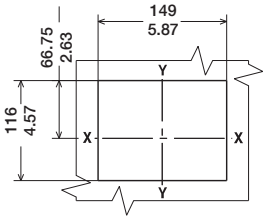


3/4 POLES
With flange

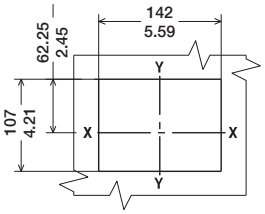


3/4 POLES
Without flange

### Flange for the compartment door

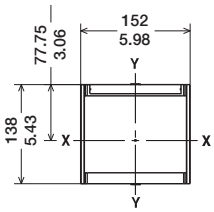

# Tmax molded case circuit breakers
## Overall dimensions

### T7 FIXED VERSION

**T7 3P/4P**
Fixing on sheet with front terminals (F)

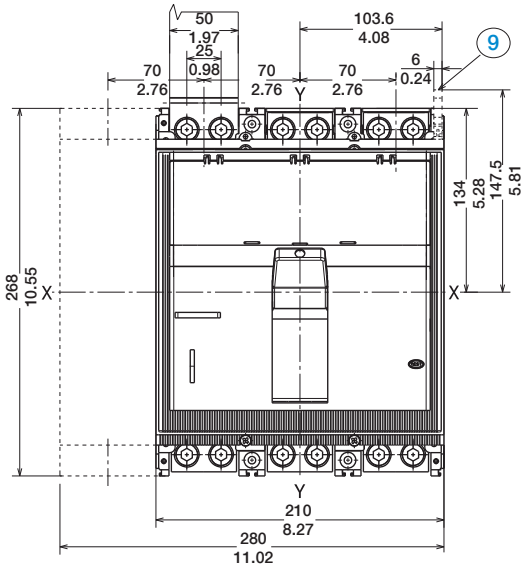


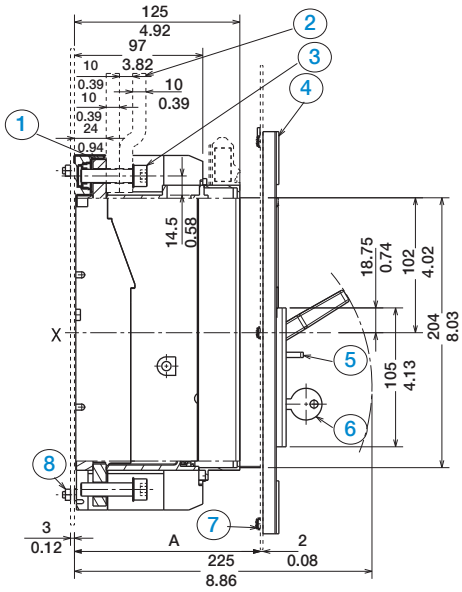


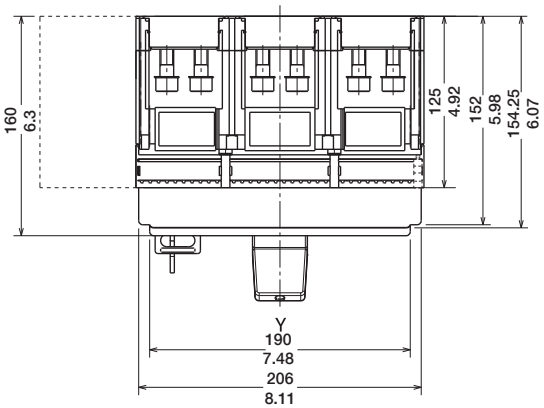


| | With flange | Without flange |
|---|---|---|
| A (mm) | 125...141 | 147 |
| A (in) | 4.92...5.55 | 5.79 |

### Caption

1. Front terminals for flat connection
2. Busbars
3. Tightening torque 18 Nm
4. Flange for the compartment door
5. Padlock (optional)
6. Key lock (optional)
7. Flange fixing screws
8. Tightening torque 2.5 Nm
9. Terminal for auxiliary contacts

# Tmax molded case circuit breakers
# Overall dimensions

## TERMINALS

### Front for CuAl cables (FC CuAl)

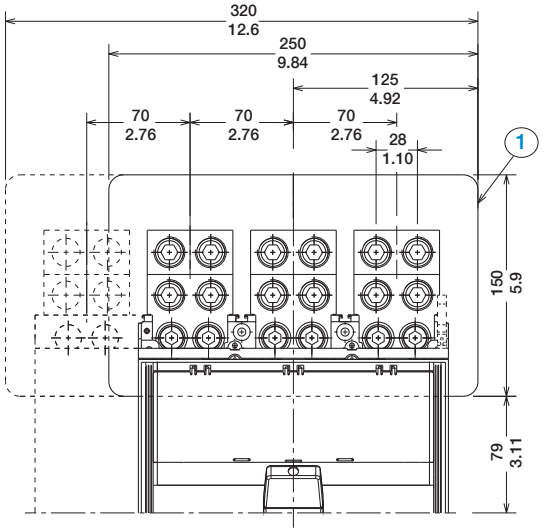


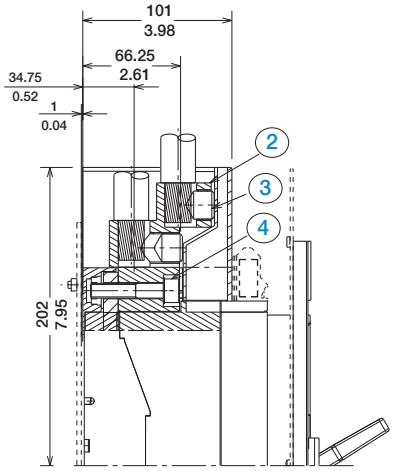


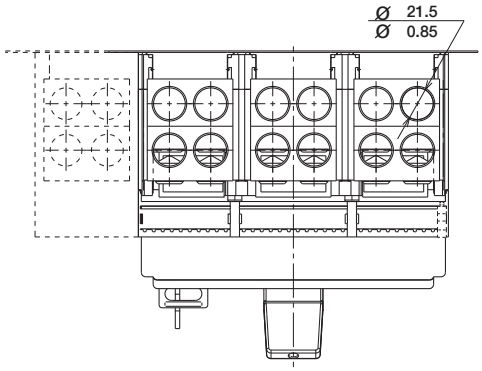


### Caption

1. Protection plate
2. Front terminals for cables FC CuAl
3. Tightening torque 43 Nm
4. Tightening torque 18 Nm

# Tmax molded case circuit breakers
## Overall dimensions

### TERMINALS (continued)
#### Front extended spread (ES)

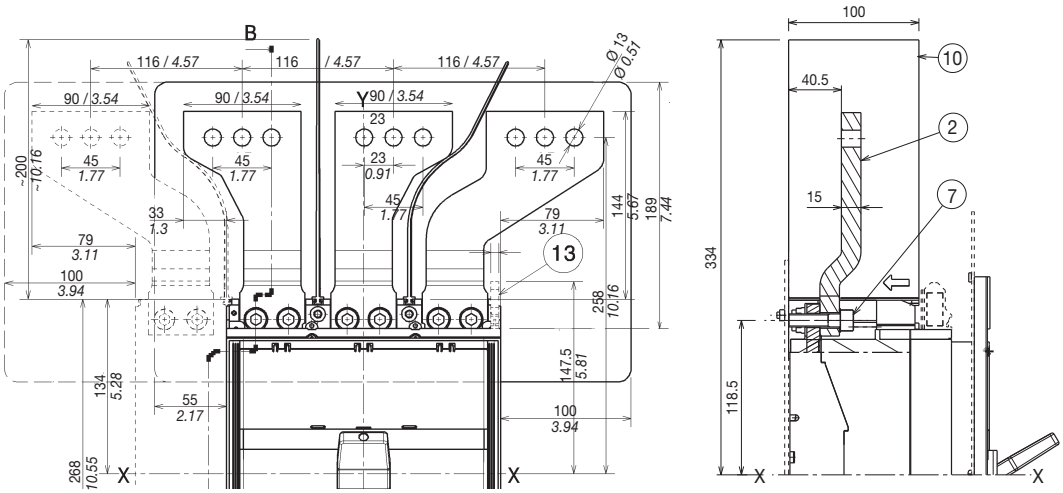


#### Front extended (EF)

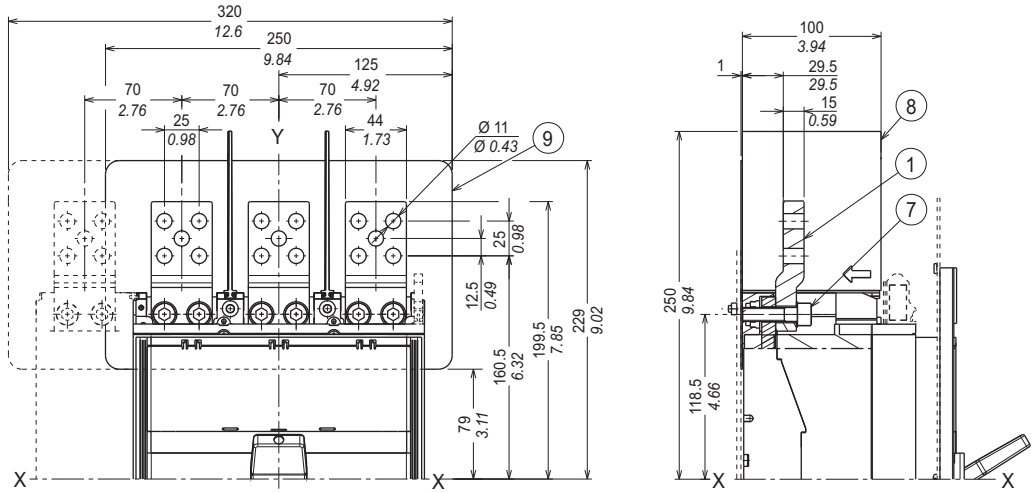


### Caption

1. Extended front terminals EF
2. Extended spread front terminals ES
6. Drilling template for fixing on support sheet
7. Tightening torque 18 Nm
8. Phase separator 100 mm
9. Protection plate
10. Phase seperator 200 mm
13. Clamp for auxiliary contacts

# Tmax molded case circuit breakers
## Overall dimensions

### TERMINALS (continued)
#### Rear terminal HR or VR

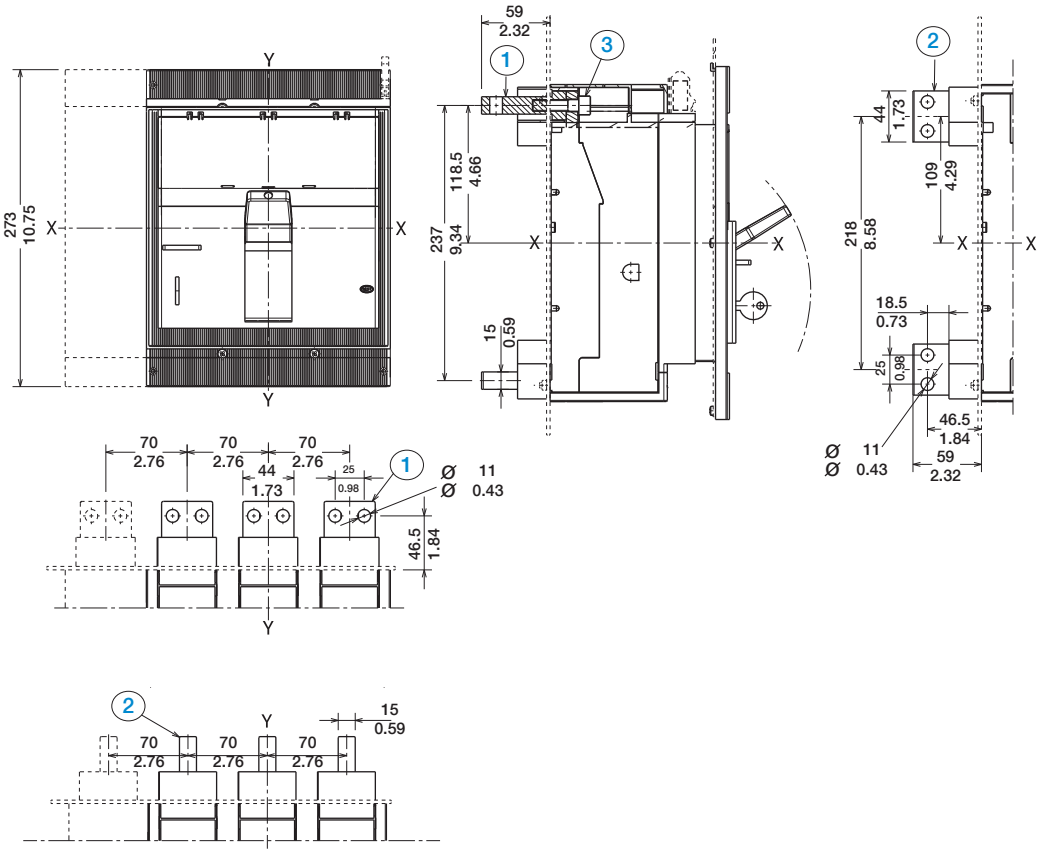


### Caption

1. Rear horizontal terminals
2. Rear vertical terminals
3. Tightening torque 20 Nm

# Tmax molded case circuit breakers
## Overall dimensions

### TERMINALS (continued)
#### Rear adjustable (R)

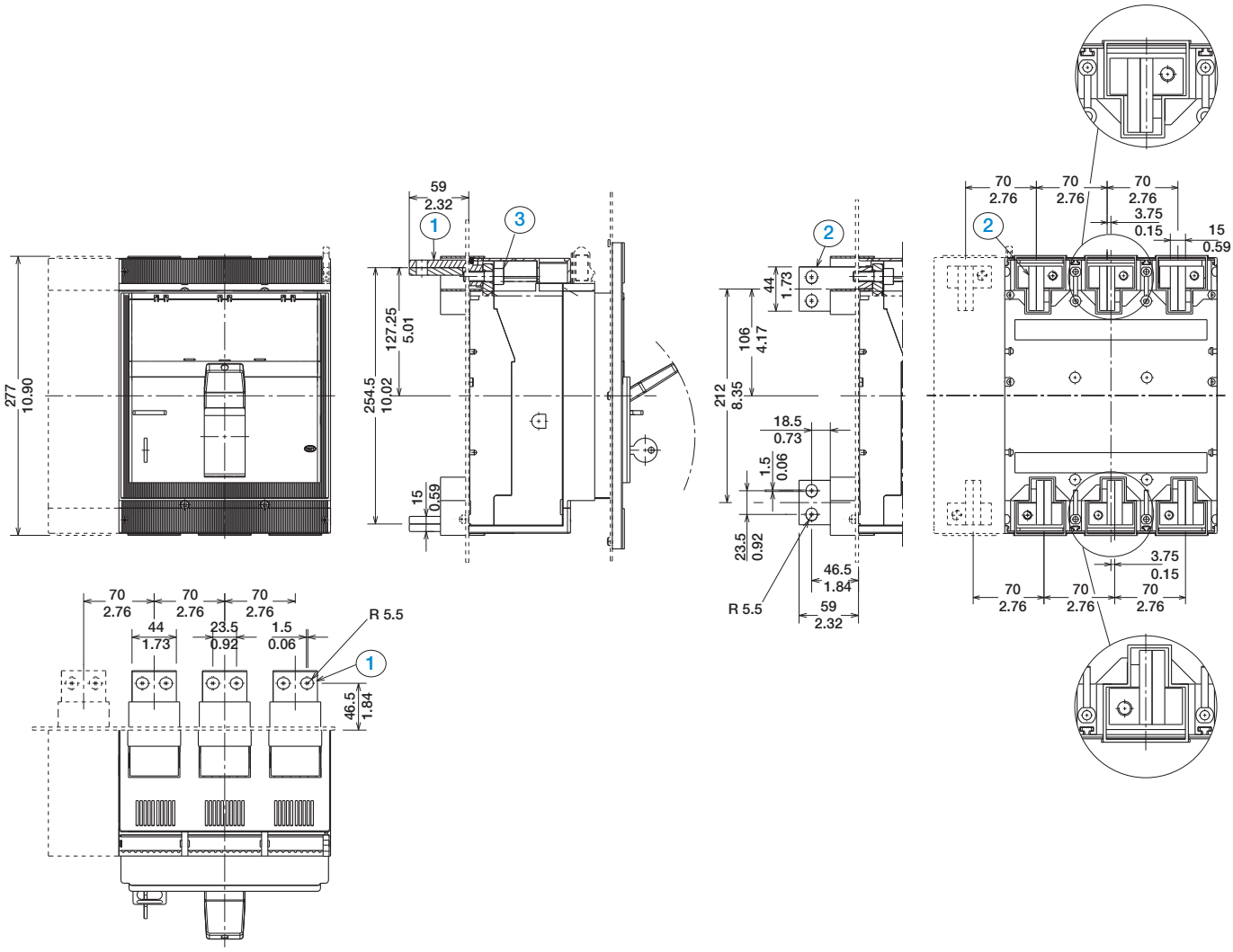


### Caption

1. Rear horizontal terminals
2. Rear vertical terminals
3. Tightening torque 20 Nm

# Tmax molded case circuit breakers
# Overall dimensions

## DRILLING TEMPLATES
### Support sheet

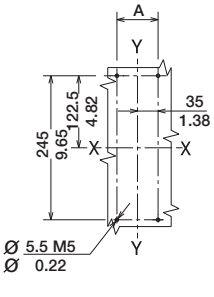


With front terminals
(F/ES/EF)

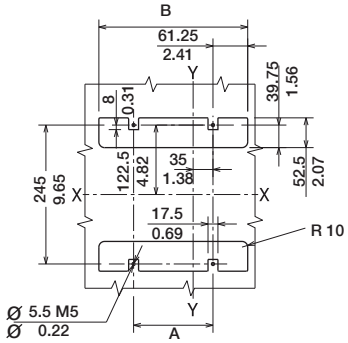


With rear terminals
(HR/VR)

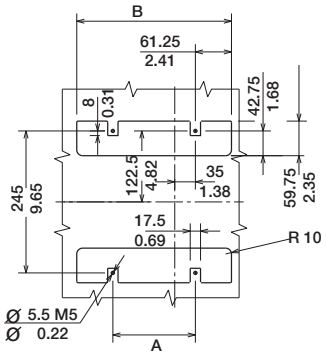


With rear adjustable
terminals (R)

| | 3 poles | 4 poles |
|---|---|---|
| A mm | 70 | 140 |
| A in | 2.76 | 5.51 |
| B mm | 192.5 | 262.5 |
| B in | 7.58 | 10.33 |

## DRILLING TEMPLATES
### Compartment door

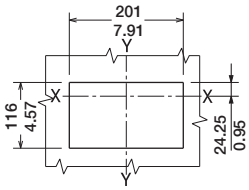


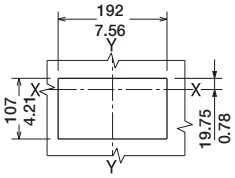


With reduced
flange

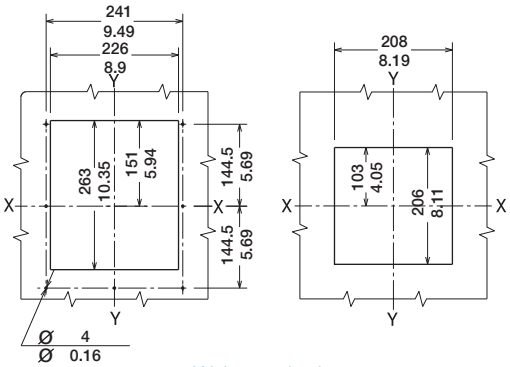


With standard
flange

## Flange for the compartment door (supplied as standard)

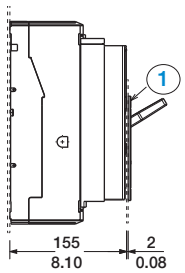


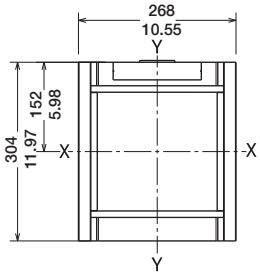


Standard flange

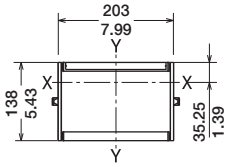


Reduced flange
(optional)

### Caption

(1) Reduced flange (optional)

# Tmax molded case circuit breakers
## Overall dimensions

### T7M FIXED VERSION

**T7M 3P/4P**
Fixing on sheet with front terminals (F)

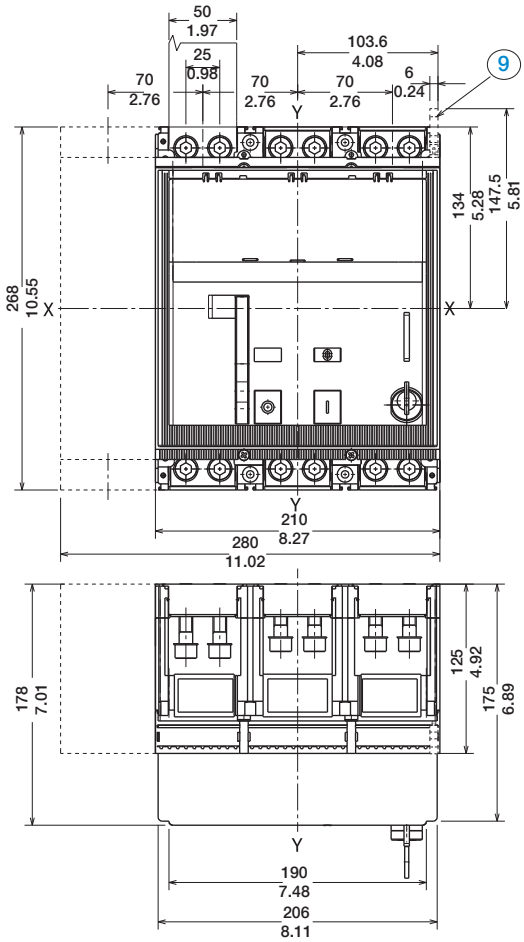


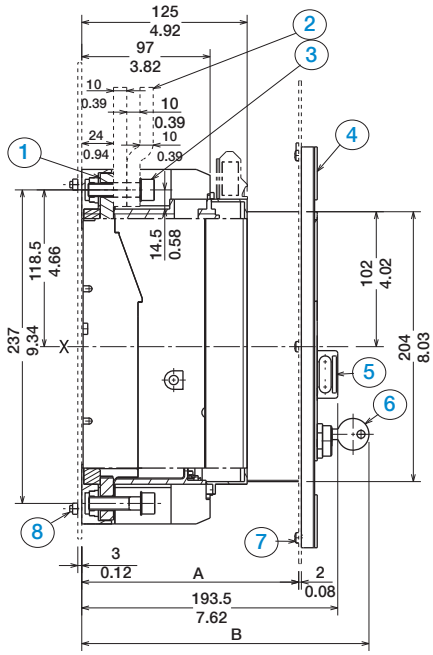


| | With flange | Without flange |
|---|---|---|
| A mm | 125...184 | 170 |
| A in | 4.92...7.24 | 6.7 |

| | Standard | Ronis | Profalux | Kirk | Castell |
|---|---|---|---|---|---|
| B mm | 208 | 216 | 224 | no | no |
| B in | 8.19 | 8.5 | 8.82 | no | no |

### Caption

1. Front terminals for flat connection
2. Busbars
3. Tightening torque 18 Nm
4. Flange for the compartment door
5. Padlock (optional)
6. Key lock (optional)
7. Flange fixing screws
8. Tightening torque 2.5 Nm
9. Terminal for auxiliary contacts

# Tmax molded case circuit breakers
# Overall dimensions

## TERMINALS

### Front for CuAl cables (FC CuAl)

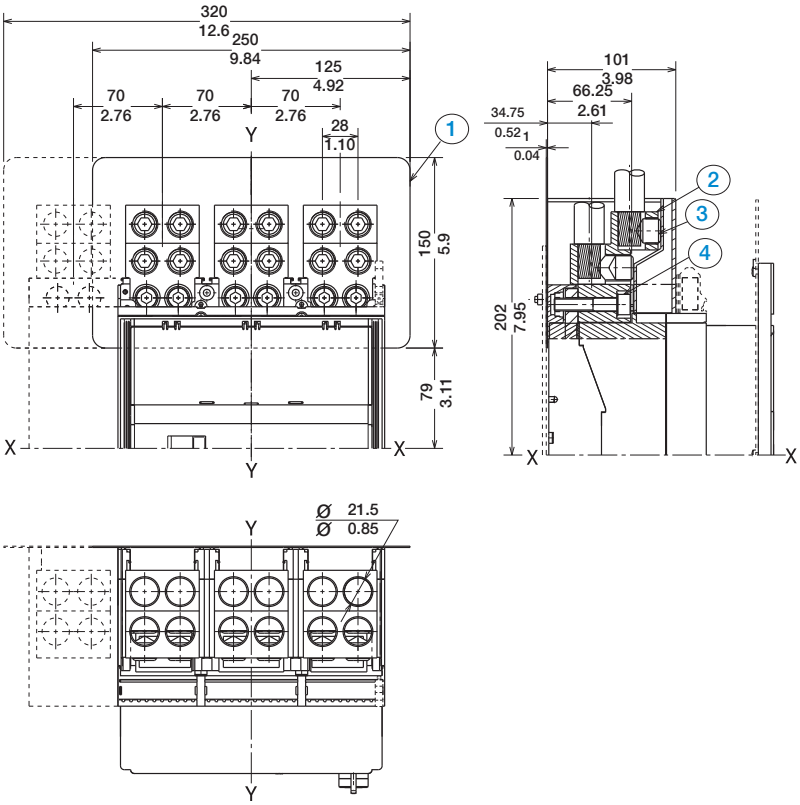


### Caption

1. Protection plate
2. Front terminals for cables FC CuAl
3. Tightening torque 43 Nm
4. Tightening torque 18 Nm

# Tmax molded case circuit breakers
## Overall dimensions

### TERMINALS (continued)
#### Front extended spread (ES)

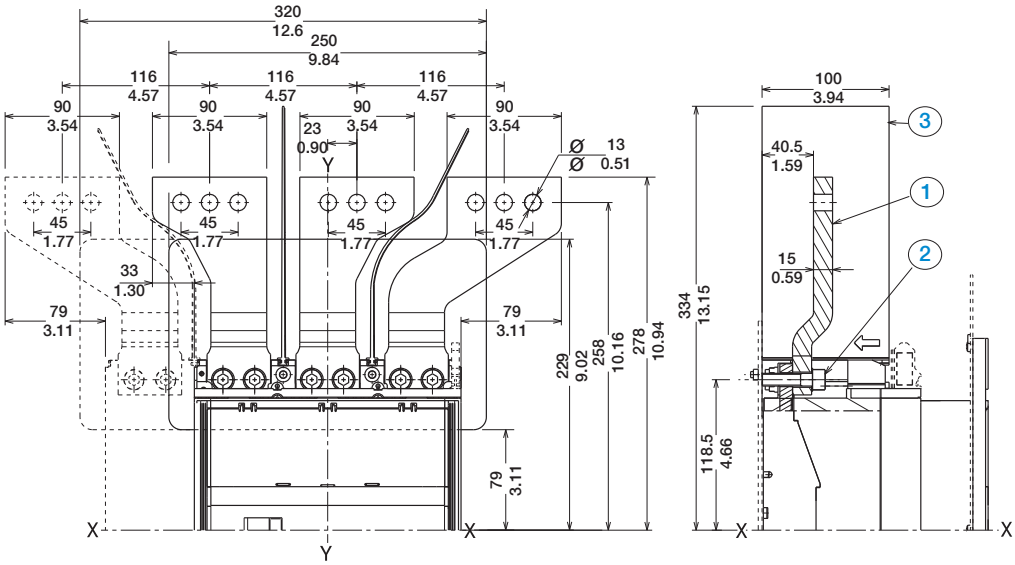


#### Front extended (EF)

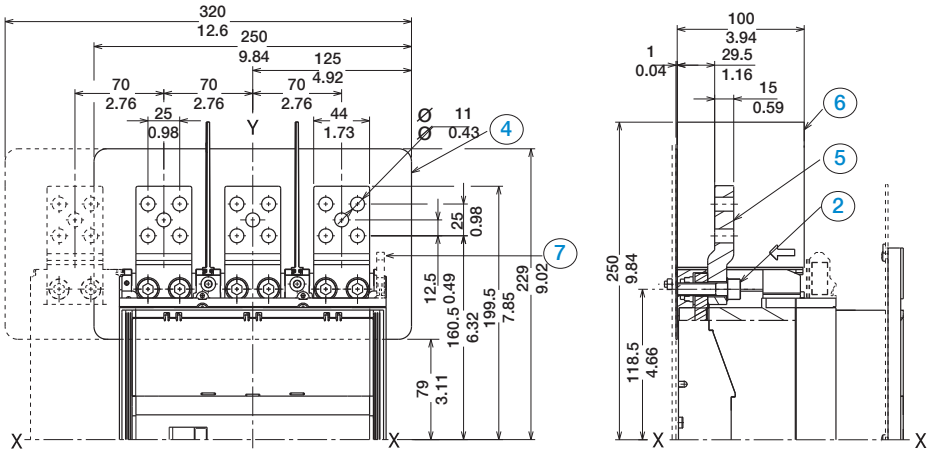


### Caption

1. Rear spread terminals ES
2. Tightening torque 18 Nm
3. Phase seperators 200 mm
4. Protection plate
5. Extended fron terminals EF
6. Phase seperators 100 mm
7. Clamp for auxiliary contacts

# Tmax molded case circuit breakers
## Overall dimensions

### TERMINALS (continued)
#### Rear terminal HR or VR

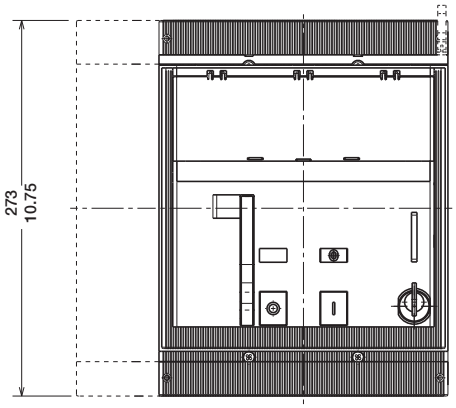


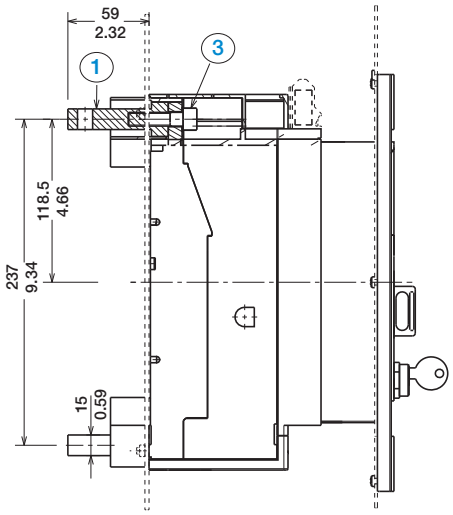


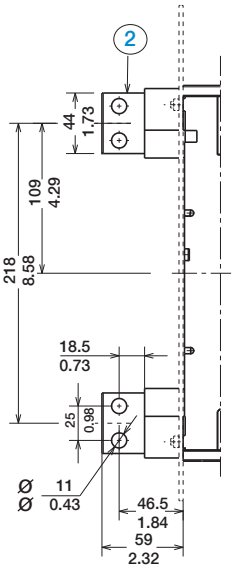


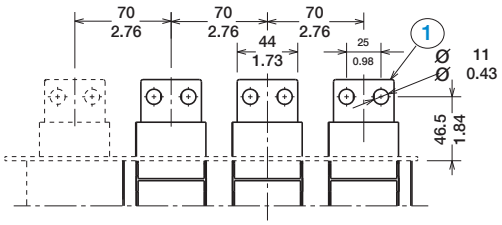


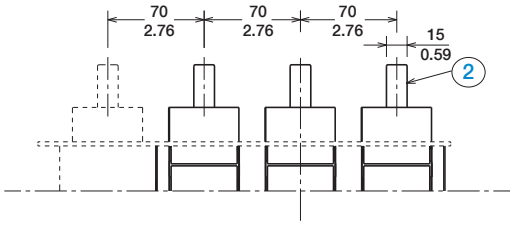


### Caption

1. Rear horizontal terminals
2. Rear vertical terminals
3. Tightening torque 20 Nm

# Tmax molded case circuit breakers
## Overall dimensions

### TERMINALS (continued)
#### Rear adjustable (R)

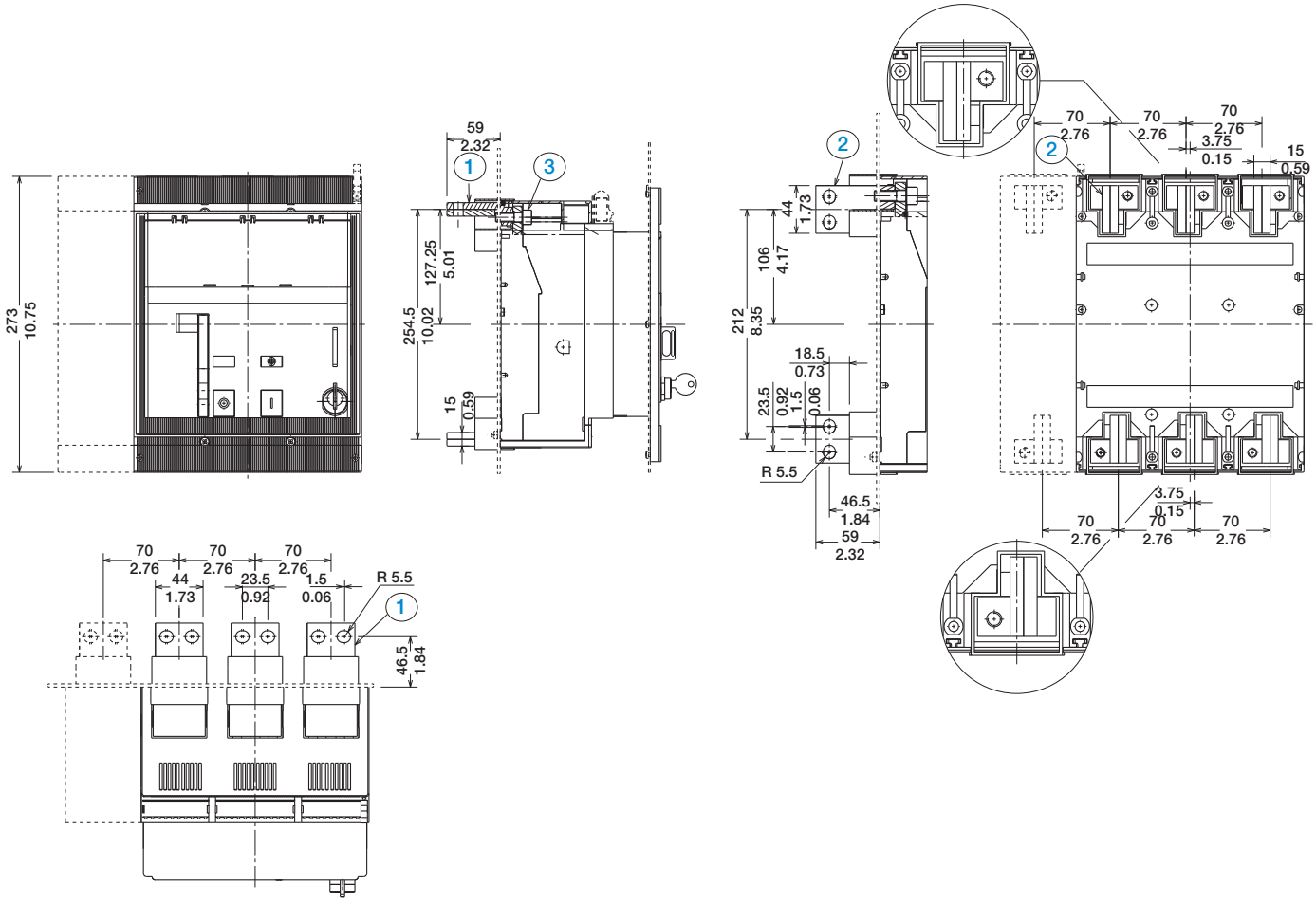


### Caption

1. Rear horizontal terminals
2. Rear vertical terminals
3. Tightening torque 20 Nm

# Tmax molded case circuit breakers
# Overall dimensions

## DRILLING TEMPLATES
### Support sheet

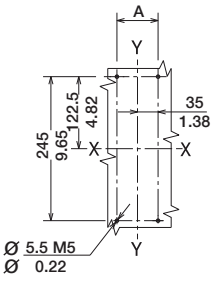


With front terminals
(F)

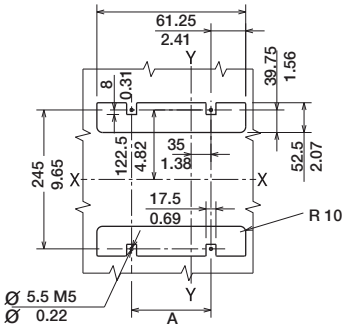


With rear terminals
(R/HR/VR)

| | 3 poles | 4 poles |
|---|---|---|
| A mm | 70 | 140 |
| A in | 2.76 | 5.51 |
| B mm | 192.5 | 262.5 |
| B in | 7.58 | 10.33 |

## DRILLING TEMPLATES
### Compartment door

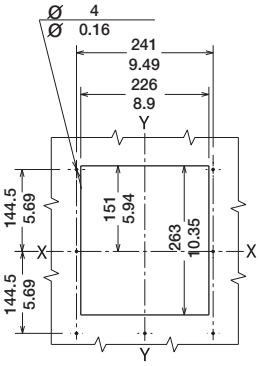


With flange

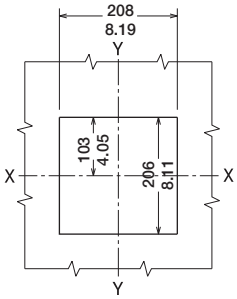


Without flange

## Flange for the compartment door (supplied as standard)

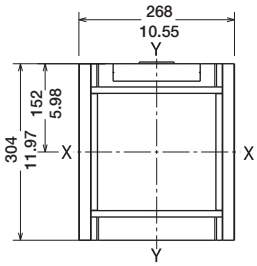

# Tmax molded case circuit breakers
## Overall dimensions

### T8 FIXED VERSION

**T8 3P/4P**
Fixing on sheet with front terminals (F) 1600/2000/2500A

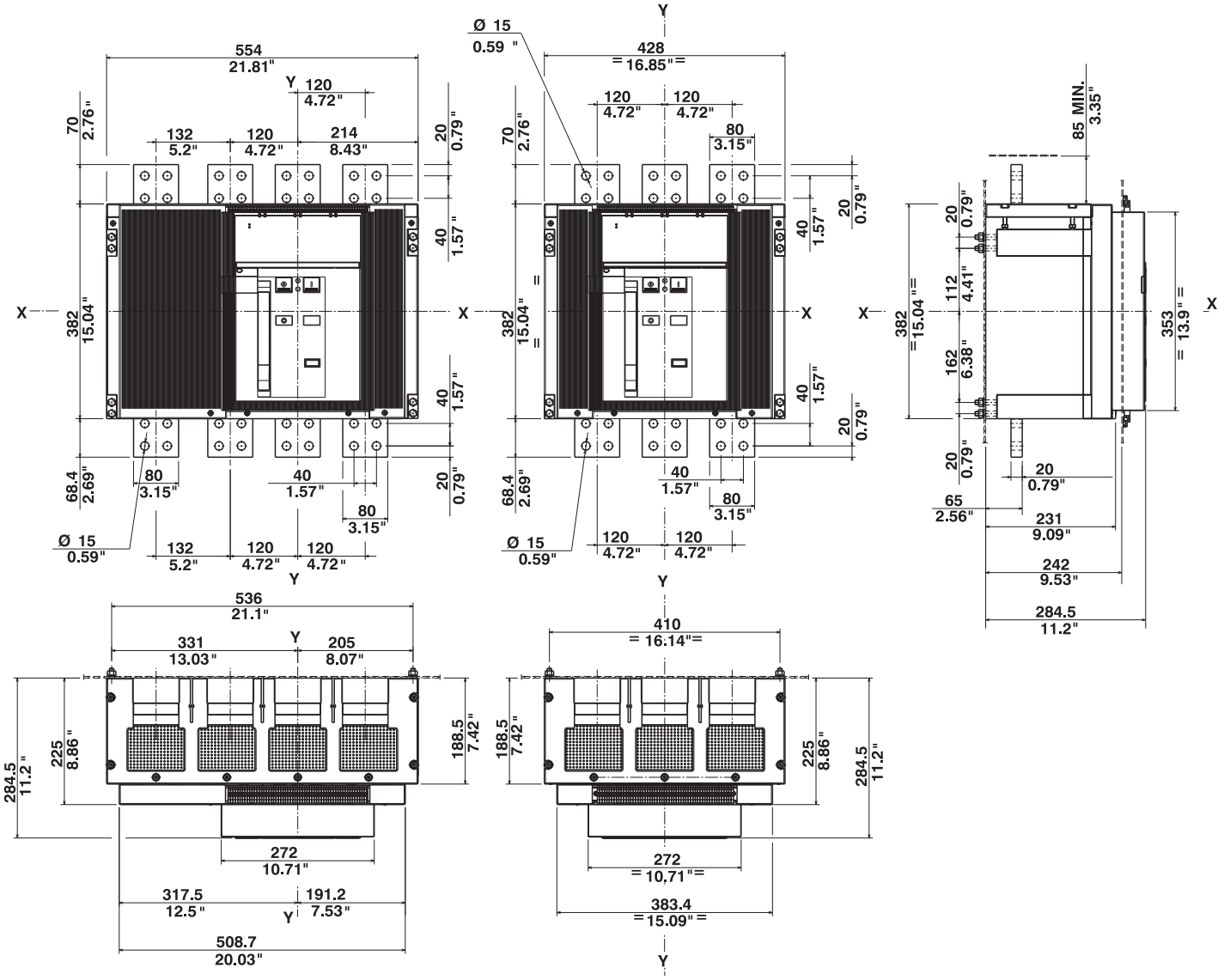

# Tmax molded case circuit breakers
## Overall dimensions

### TERMINALS

#### Rear vertical terminals VR (1600/2000/2500A)

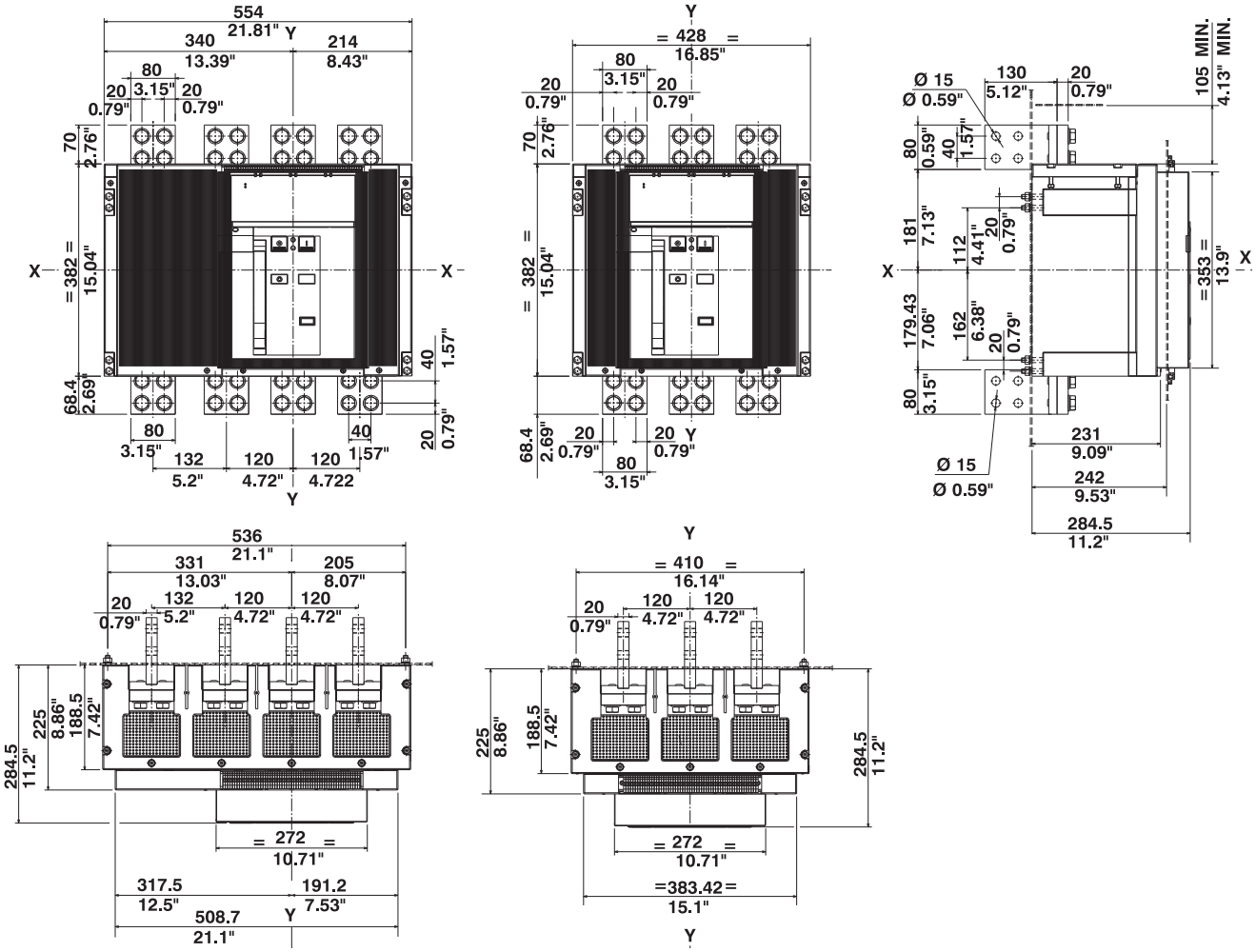

# Tmax molded case circuit breakers
## Overall dimensions

### TERMINALS (continued)
#### Rear vertical terminals VR (3000A)

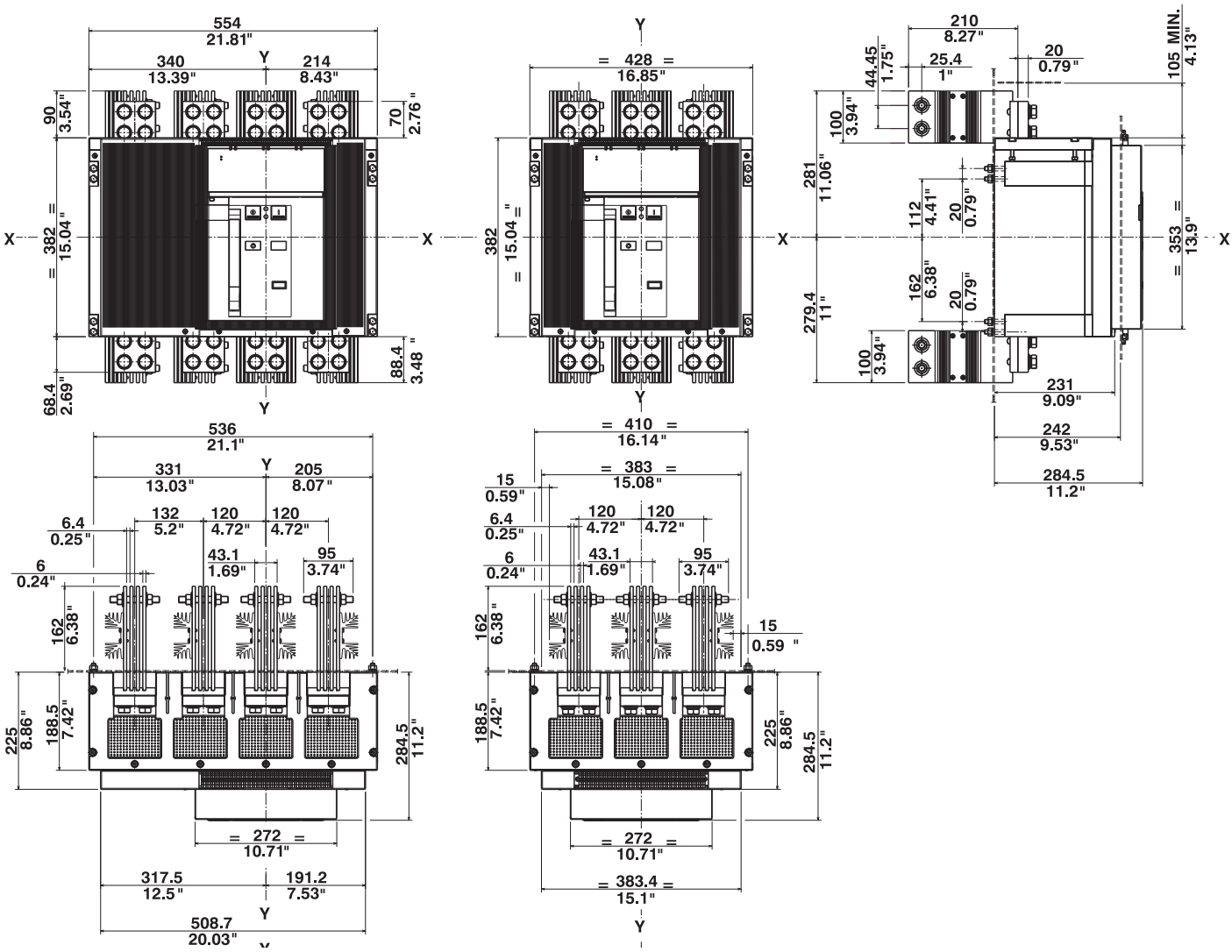

# Tmax molded case circuit breakers
# Overall dimensions

## DRILLING TEMPLATES
### Support sheet

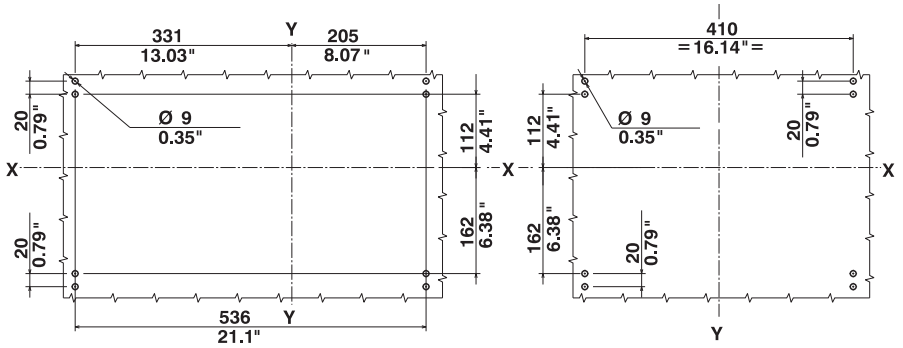


With front terminals
(F)

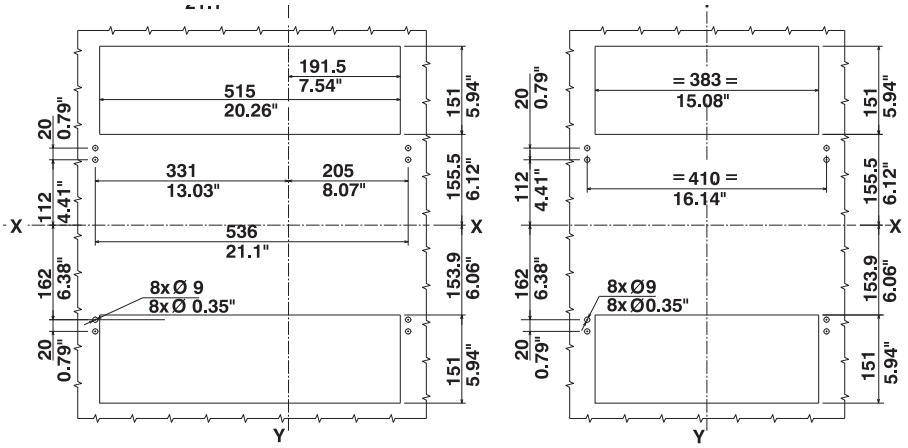


With rear terminals
(F)

## DRILLING TEMPLATES
### Compartment door

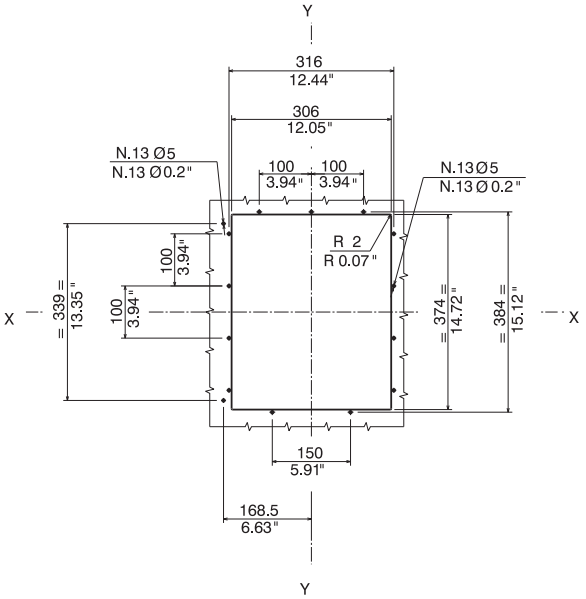

# Tmax molded case circuit breakers
# Overall dimensions

## T2 PLUG-IN VERSION

**T2 3P/4P**
Fixing on sheet

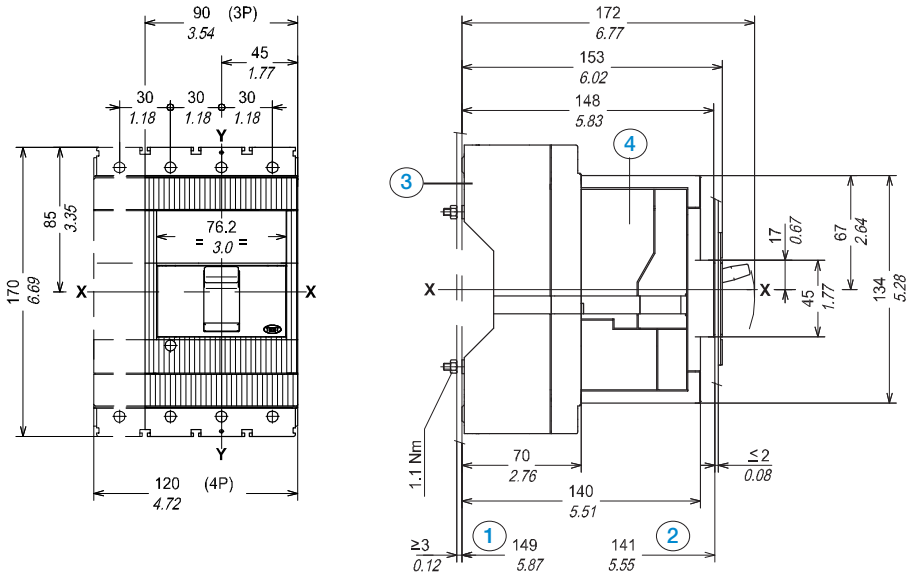


### Caption

1. Depth of the switchboard in the case of circuit breaker with face not extending from the compartment door, with or without flange
2. Depth of the switchboard in the case of circuit breaker with face extending from the compartment door, without flange
3. Cradle
4. Moving part with terminal covers, degree of protection IP40

# Tmax molded case circuit breakers
## Overall dimensions

### TERMINALS

#### Front (F)

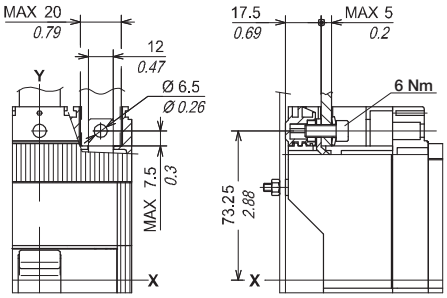


#### Front for Cu cables (FC Cu)

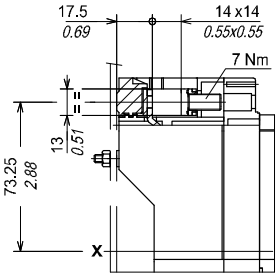


#### Front for CuAl cables (FC CuAl)

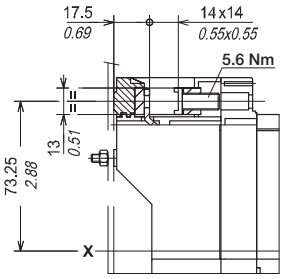


#### Front extended spread (ES)

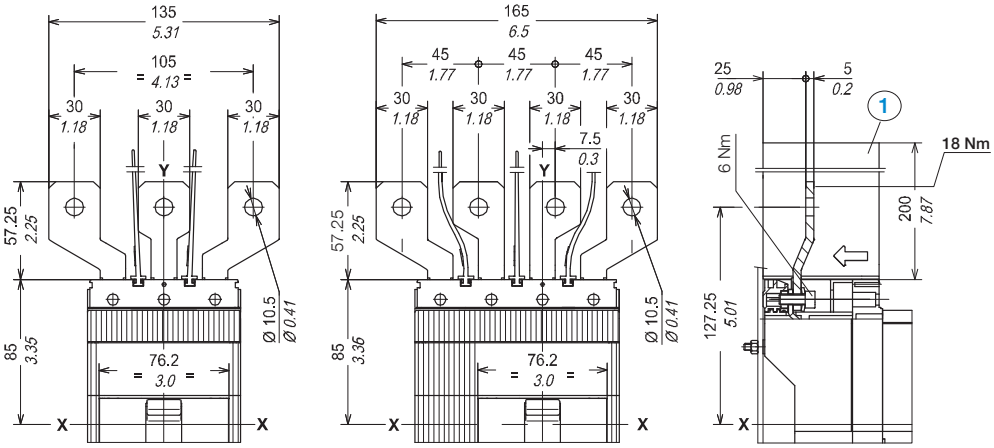


### Caption

(1) Insulating barrier between phases (compulsory)

# Tmax molded case circuit breakers
## Overall dimensions

### TERMINALS (continued)

#### Front extended (EF)

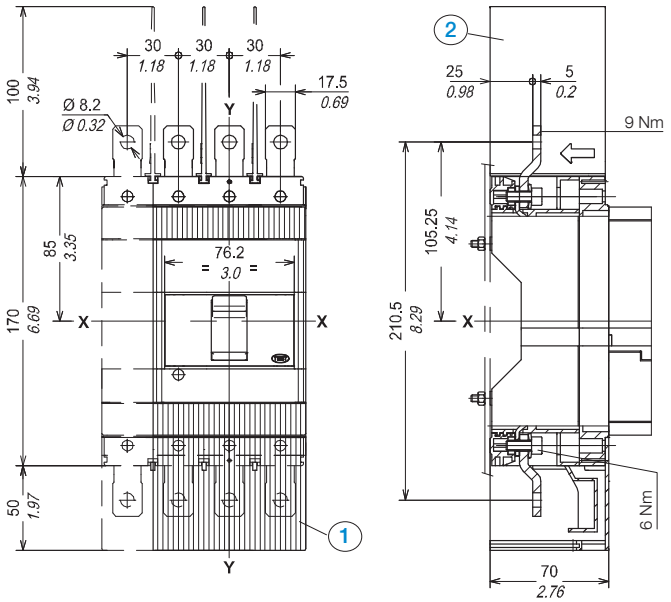


#### Caption

1. High terminal covers with IP40 protection degree
2. Insulating barriers between phases (compulsory without 1)

#### Rear (R)

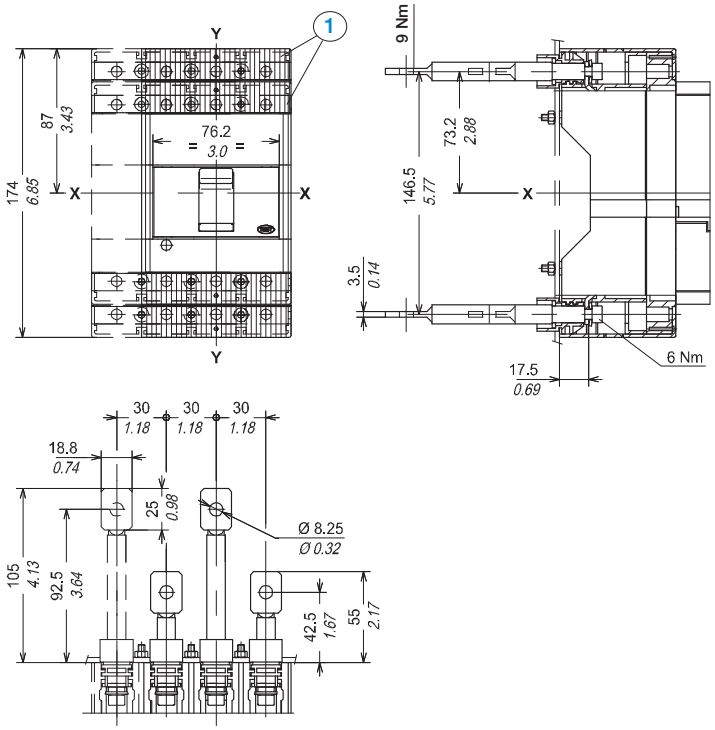


#### Caption

1. Low terminal covers with IP40 protection degree

# Tmax molded case circuit breakers
# Overall dimensions

## DRILLING TEMPLATES
### Support sheet

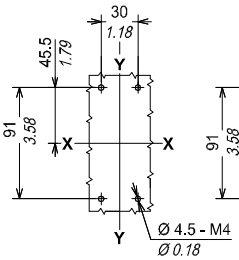


3 poles with front terminals (F)

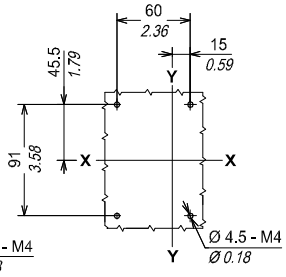


4 poles with front terminals (F)

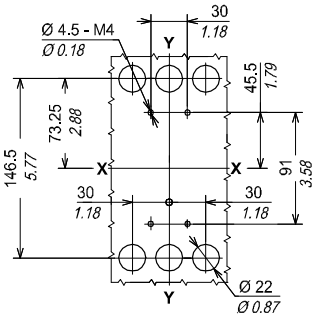


3 poles with rear terminals (R)

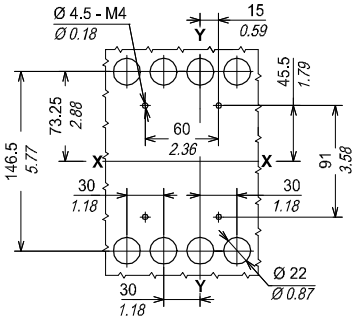


4 poles with rear terminals (R)

## DRILLING TEMPLATES
### Compartment door

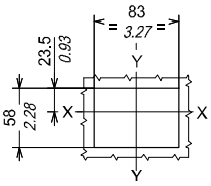


3-4 poles with flange and circuit breaker face flush with door

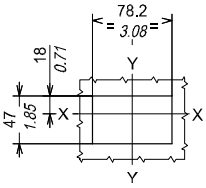


3-4 poles without flange and circuit breaker face flush with door

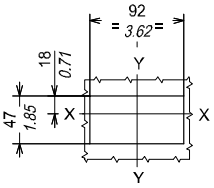


3 poles with flange and circuit breaker face extending

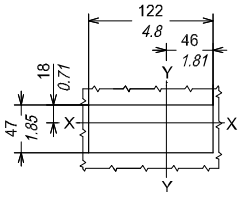


4 poles with flange and circuit breaker face extending

## Flange for the compartment door

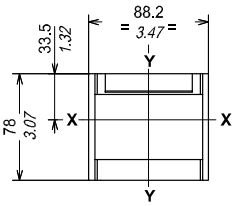

# Tmax molded case circuit breakers
# Overall dimensions

## T3 PLUG-IN VERSION

**T3 3P/4P**
Fixing on sheet

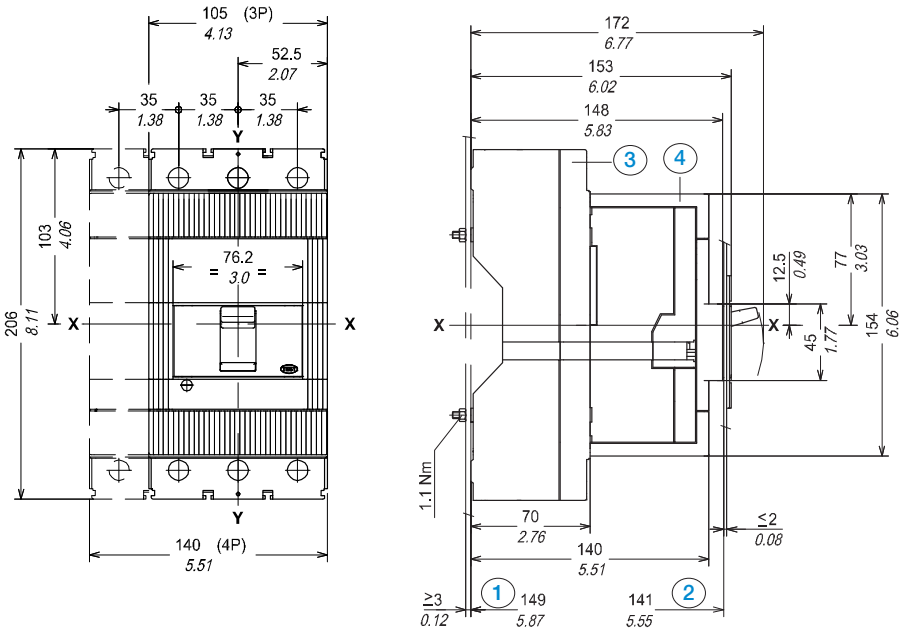


### Caption

1. Depth of the switchboard in the case of circuit breaker with face not extending from the compartment door, with or without flange
2. Depth of the switchboard in the case of circuit breaker with face extending from the compartment door, without flange
3. Cradle
4. Moving part with terminal covers, degree of protection IP40

# Tmax molded case circuit breakers
## Overall dimensions

### TERMINALS

#### Front (F)

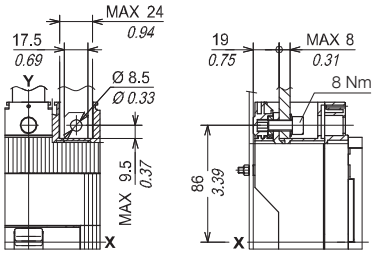


#### Front for Cu cables (FC Cu)

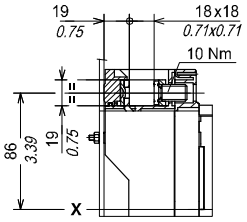


#### Front for CuAl cables (FC CuAl)

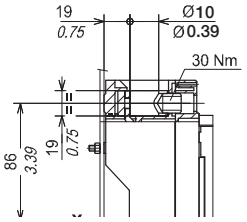


#### Front extended spread (ES)

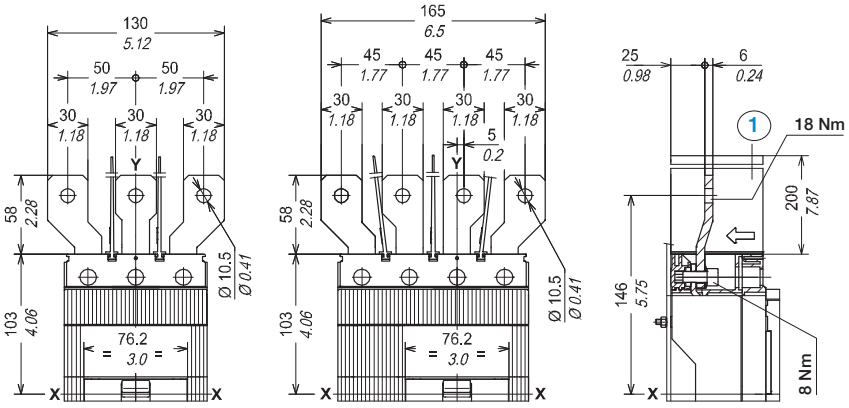


### Caption

1 Insulating barrier between phases (compulsory)

# Tmax molded case circuit breakers
## Overall dimensions

### TERMINALS (continued)

#### Front extended (EF)

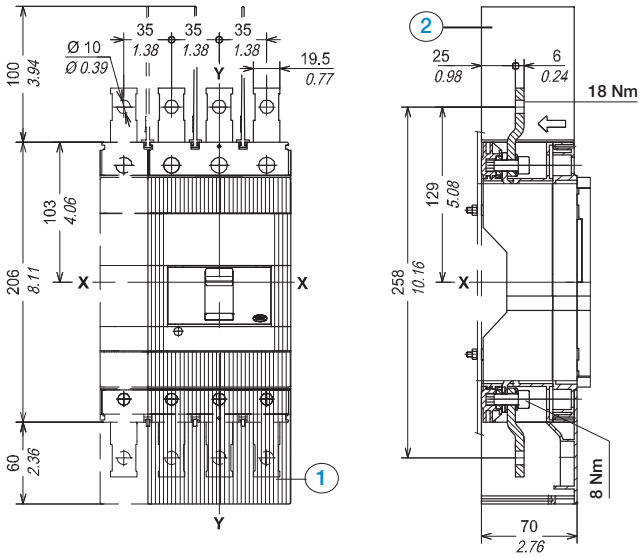


#### Caption

1. High terminal covers with IP40 protection degree
2. Insulating barriers between phases (compulsory without 1)

#### Rear (R)

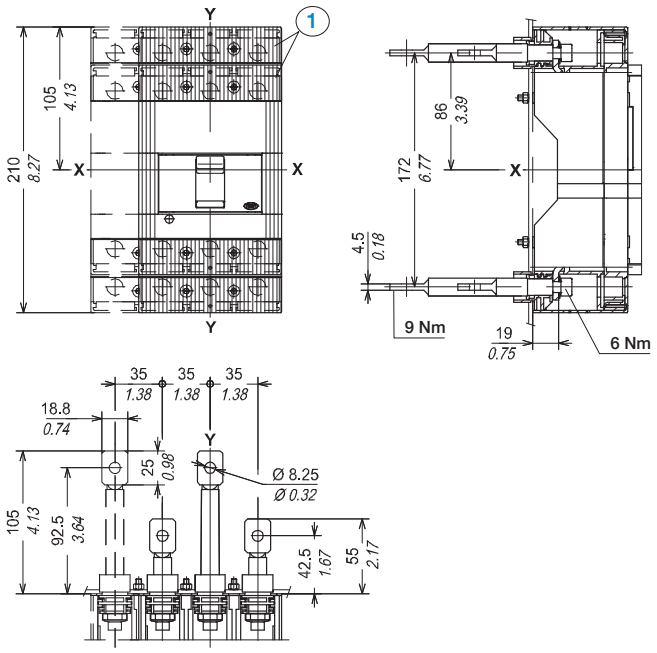


#### Caption

1. Low terminal covers with IP40 protection degree

# Tmax molded case circuit breakers
# Overall dimensions

## DRILLING TEMPLATES
### Support sheet

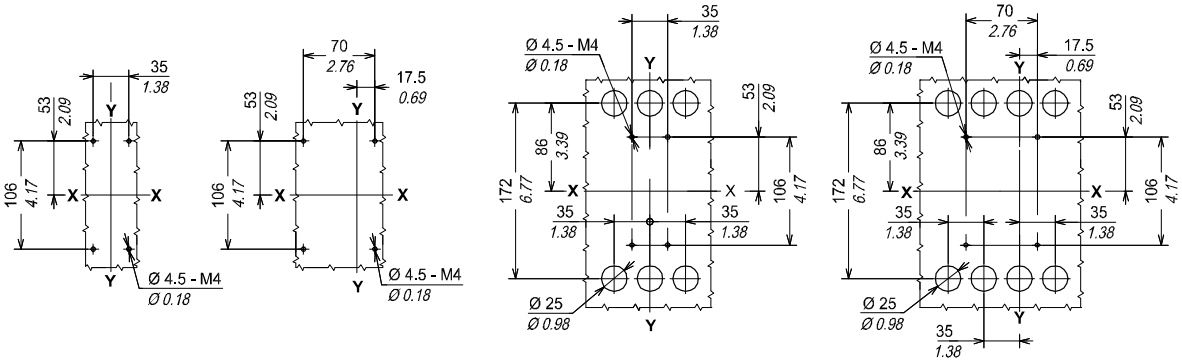


3 poles with front terminals (F)

4 poles with front terminals (F)

3 poles with rear terminals (R)

4 poles with rear terminals (R)

## DRILLING TEMPLATES
### Compartment door

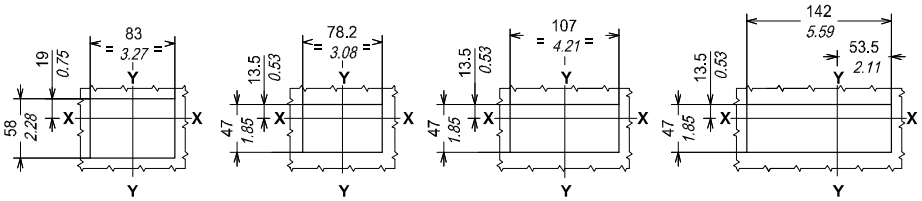


3-4 poles with flange and circuit breaker face flush with door

3-4 poles without flange and circuit breaker face flush with door

3 poles with flange and circuit breaker face extending

4 poles with flange and circuit breaker face extending

## Flange for the compartment door

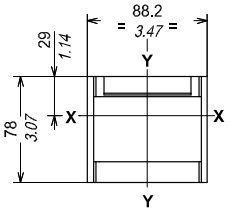

# Tmax molded case circuit breakers
## Overall dimensions

### Ts3 PLUG-IN VERSION

**Ts3 3P/4P**
Fixing on sheet

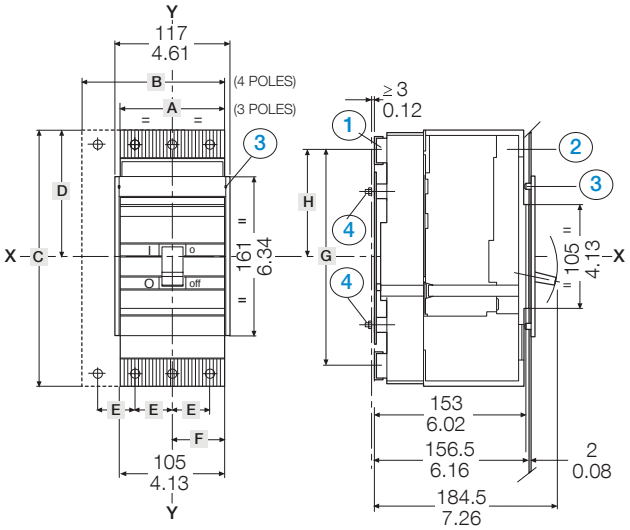


| Letter | A | B | C | D | E | F | G | H |
|---|---|---|---|---|---|---|---|---|
| mm | 105 | 140 | 175 | 89.75 | 35 | 52.5 | 143 | 84 |
| in | 4.13 | 5.51 | 6.89 | 3.53 | 1.38 | 2.07 | 5.63 | 3.31 |

### Caption

1. Cradle
2. Moving part complete with IP20 protection terminal covers
3. Flange for compartment door
4. Tightening torque 1.1 Nm

# Tmax molded case circuit breakers
# Overall dimensions

## TERMINALS

### Front (F)

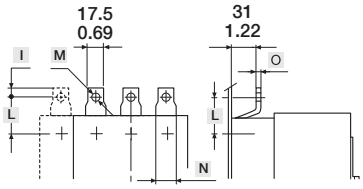


### Front for Cu cables (FC Cu)

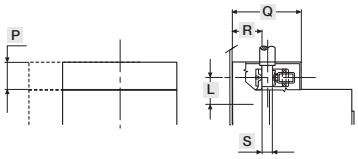


### Rear threaded (R)

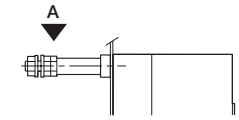


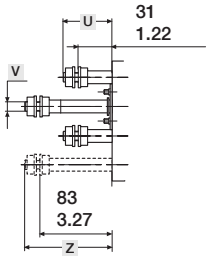


| Letter | I | L | M | N | O | P | Q | R | S | U | V | Z |
|---|---|---|---|---|---|---|---|---|---|---|---|---|
| mm | 10 | 33.5 | Ø8.5 | 20 | 5 | 37.5 | 79.5 | 36 | 18x18 | 48 | M12 | 100 |
| in | 0.39 | 1.32 | Ø0.33 | 0.79 | 0.20 | 1.48 | 3.13 | 1.42 | 0.71x0.71 | 1.89 | | 3.94 |

# Tmax molded case circuit breakers
# Overall dimensions

## DRILLING TEMPLATES
### Support sheet (minimum thickness of sheet metal 0.12” / 3mm)

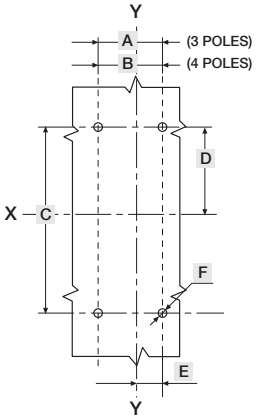


For front terminals

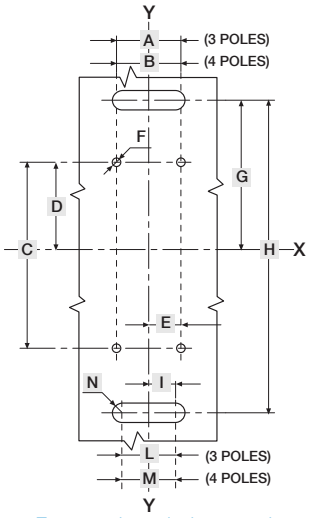


For rear threaded terminals

## DRILLING TEMPLATES
### Compartment door (minimum thickness of sheet metal 0.08” / 2mm)

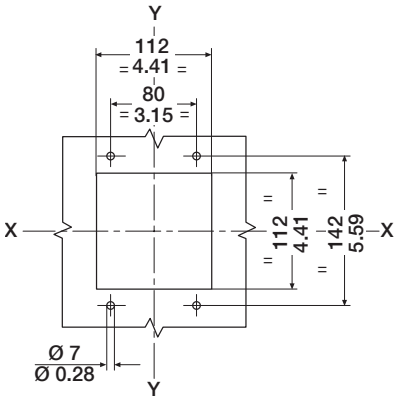


| Letter | A | B | C | D | E | F | G | H | I | L | M | N |
|---|---|---|---|---|---|---|---|---|---|---|---|---|
| mm | 70 | 105 | 100 | 52.25 | 25 | M4-Ø5 | 73.75 | 143 | 35 | 70 | 105 | R14 |
| in | 2.76 | 4.13 | 3.94 | 2.06 | 0.98 | M4-Ø0.20 | 2.90 | 5.63 | 1.36 | 2.76 | 4.13 | R0.55 |

# Tmax molded case circuit breakers
# Overall dimensions

## T4 PLUG-IN VERSION

**T4 3P/4P**
Fixing on sheet

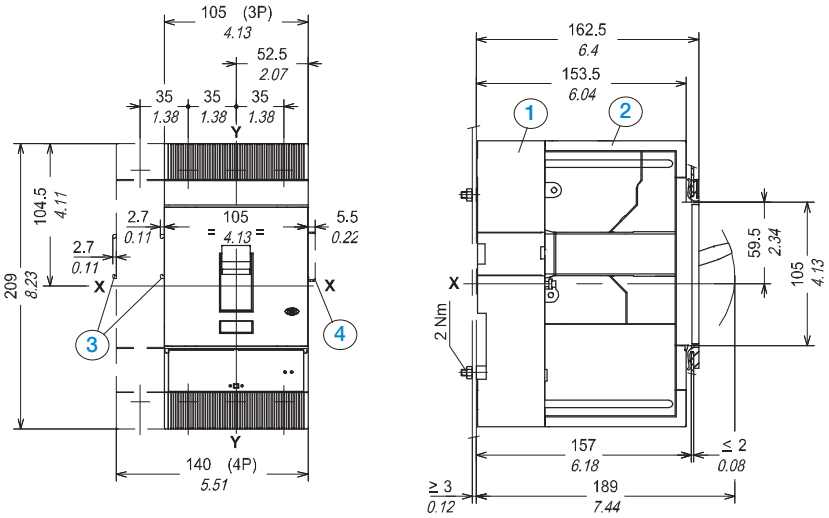


### Caption

1. Fixed part
2. Moving part with terminal covers with IP40 protection degree
3. Overall dimensions with cabled accessories mounted (SOR-C, UVR-C)
4. Overall dimensions with cabled auxiliary contacts mounted (only 3Q+1SY)

# Tmax molded case circuit breakers
## Overall dimensions

### TERMINALS

#### Front for Cu or CuAl cables (FC Cu or CuAl)

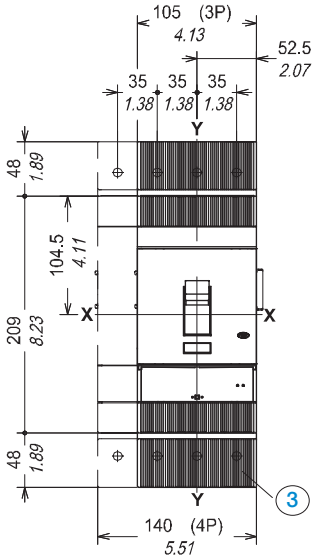


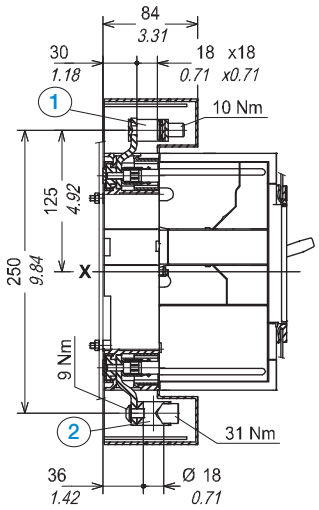


### Caption

1. For Cu cables
2. For CuAl cables
3. High terminal covers with IP40 protection degree

#### Front extended (EF)

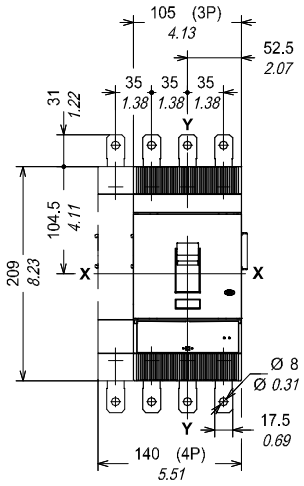


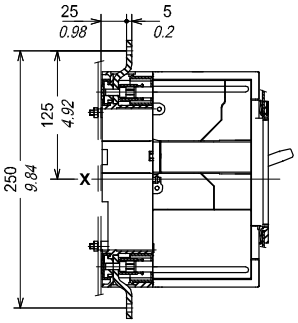

# Tmax molded case circuit breakers
## Overall dimensions

### TERMINALS (continued)
#### Rear vertical (VR)

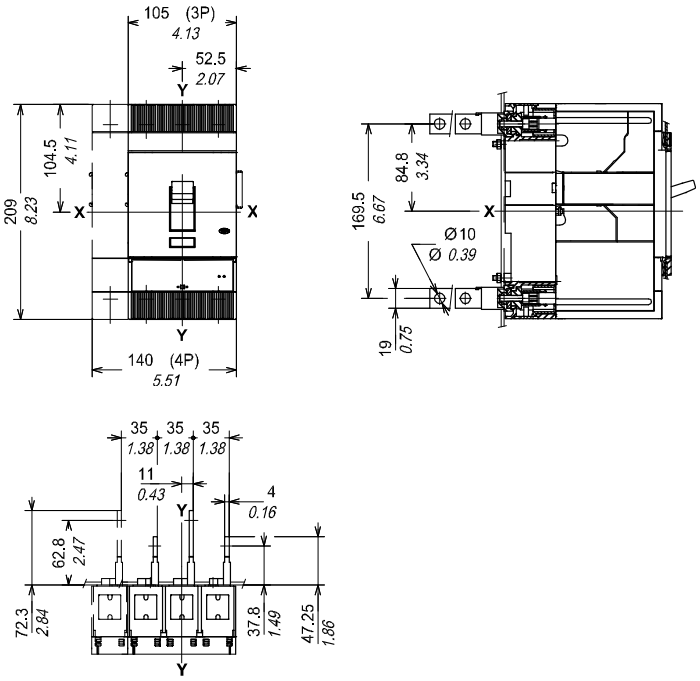


#### Rear horizontal (HR)

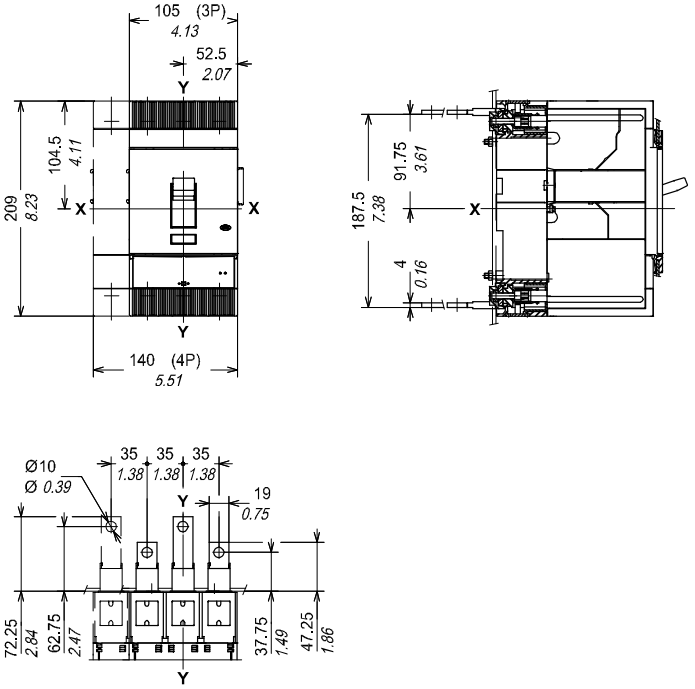

# Tmax molded case circuit breakers
# Overall dimensions

## DRILLING TEMPLATES
### Support sheet

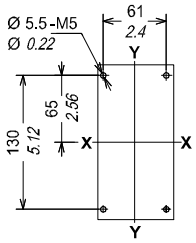


3 poles with front terminals (FC Cu/ CuAl)

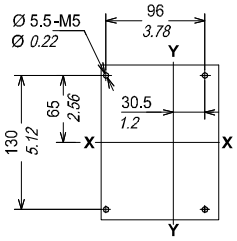


4 poles with front terminals (FC Cu/ CuAl)

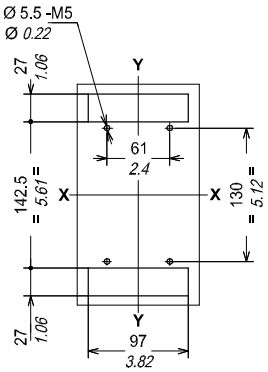


3 poles with rear terminals (HR/VR)

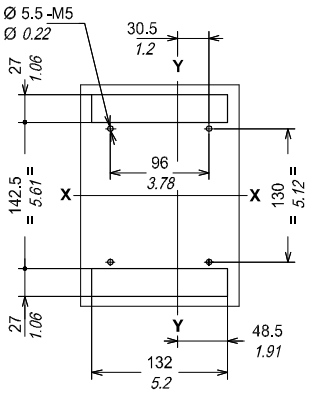


4 poles with rear terminals (HR/VR)

## DRILLING TEMPLATES
### Compartment door

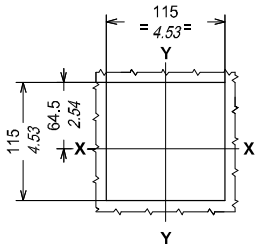


With flange

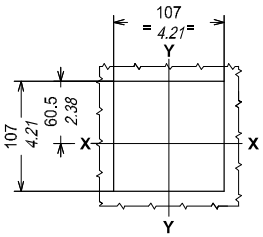


Without flange

## Flange for the compartment door

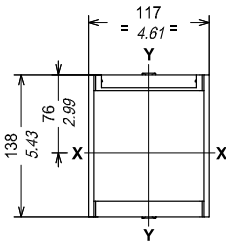

# Tmax molded case circuit breakers
# Overall dimensions

## T5 (400) PLUG-IN VERSION

**T5 3P/4P**
Fixing on sheet

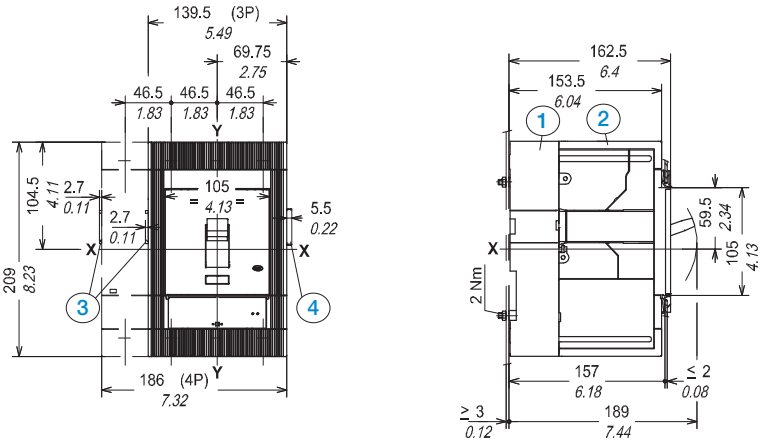


### Caption

1. Fixed part
2. Moving part with terminal covers with IP40 protection degree
3. Overall dimensions with cabled accessories mounted (SOR-C, UVR-C)
4. Overall dimensions with cabled auxiliary contacts mounted (only 3Q+1SY)

# Tmax molded case circuit breakers
## Overall dimensions

### TERMINALS

#### Front for Cu or CuAl cables (FC Cu or CuAl)

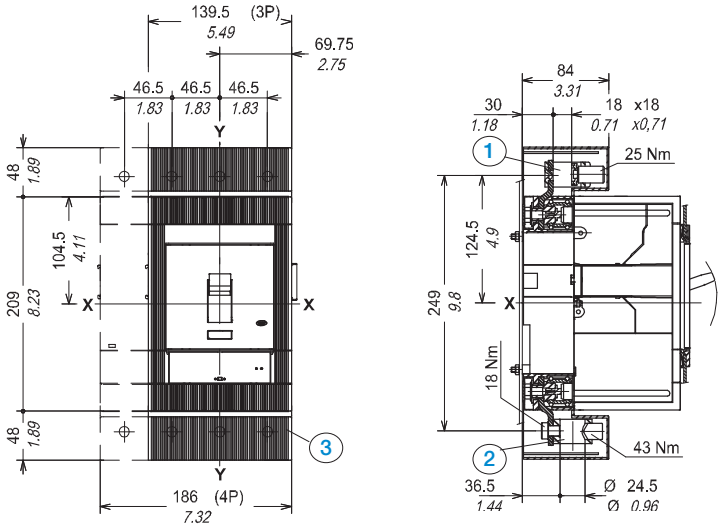


### Caption

1. For Cu cables
2. For CuAl cables
3. High terminal covers with IP40 protection degree

#### Front extended (EF)

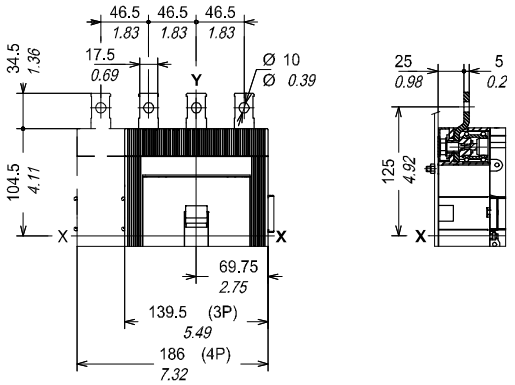

# Tmax molded case circuit breakers
# Overall dimensions

## TERMINALS (continued)

### Rear vertical (VR)

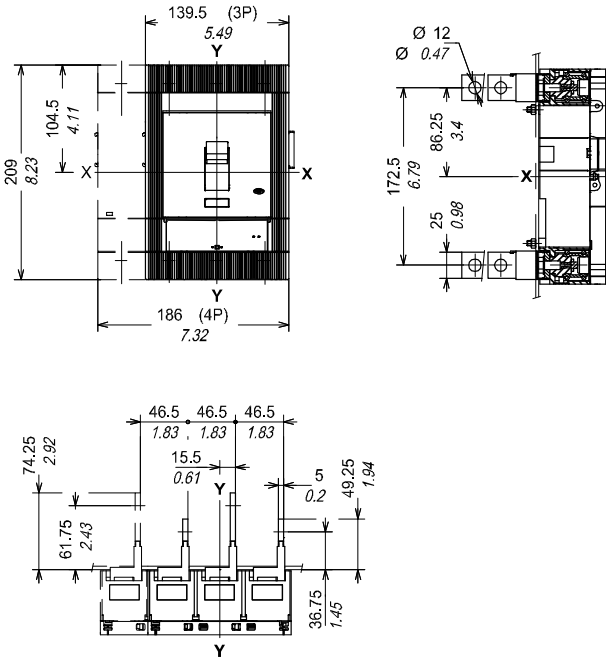


### Rear horizontal (HR)

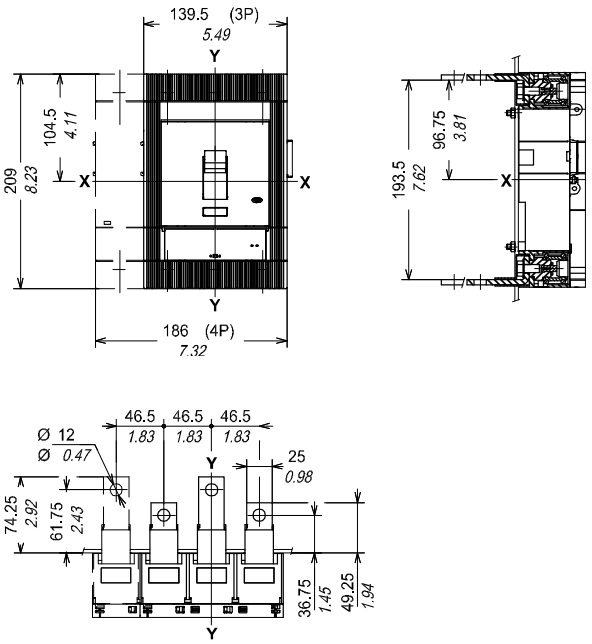

# Tmax molded case circuit breakers
# Overall dimensions

## DRILLING TEMPLATES
### Support sheet

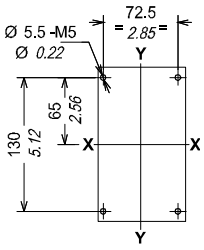


3 poles with front terminals (FC Cu/ CuAl)

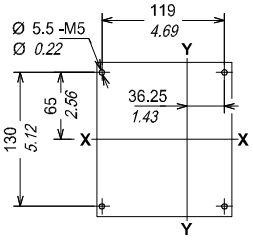


4 poles with front terminals (FC Cu/ CuAl)

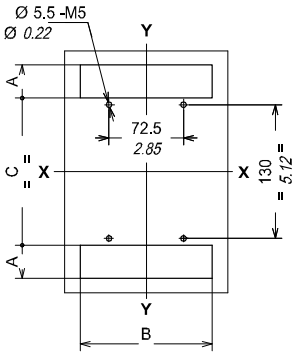


3 poles with rear terminals (HR/VR)

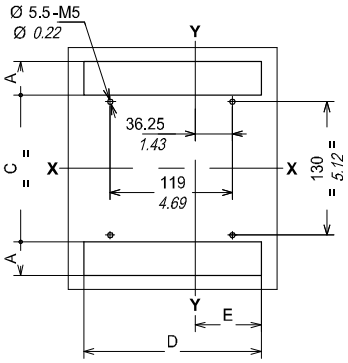


4 poles with rear terminals (HR/VR)

| Dimensions | A | B | C | D | E |
|---|---|---|---|---|---|
| mm | 32.5 | 128.5 | 143 | 172.5 | 64.5 |
| in | 1.28 | 5.06 | 5.63 | 6.79 | 2.54 |

## DRILLING TEMPLATES
### Compartment door

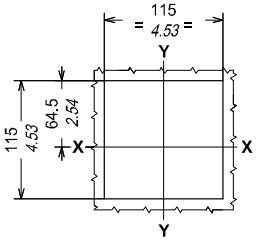


With flange

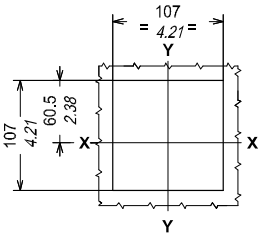


Without flange

## Flange for the compartment door

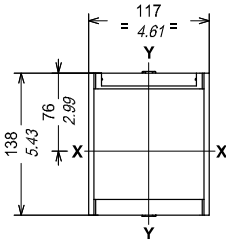

# Tmax molded case circuit breakers
# Overall dimensions

## Ts3 DRAW OUT VERSION

### Ts3 3P/4P

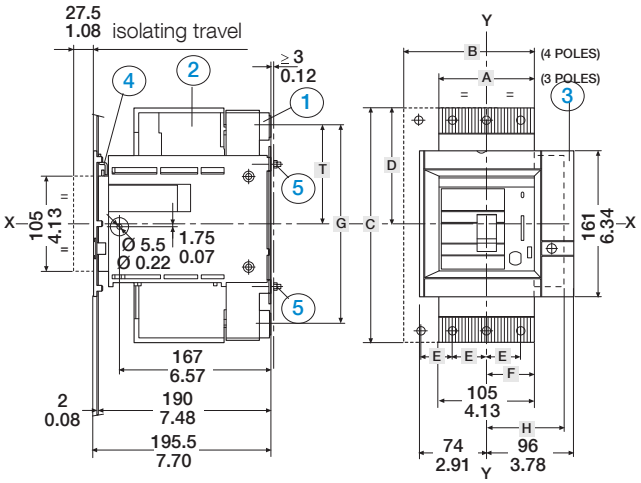


| Dimensions | A | B | C | D | E | F | G | H |
|---|---|---|---|---|---|---|---|---|
| mm | 105 | 140 | 175 | 89.75 | 35 | 52.5 | 143 | 84 |
| in | 4.13 | 5.51 | 6.89 | 3.53 | 1.38 | 2.07 | 5.63 | 3.31 |

### Caption

1. Cradle
2. Moving part with terminal covers with IP20 protection degree
3. Flange for compartment door
4. Lock for compartment door (ordered seperately)
5. Tightening torque 1.1 Nm

### Note

The draw out circuit breaker must be completed with one of the following accessories:
- Front flange for operating lever mechanism
- Rotary handle operating mechanism
- Motor operator

# Tmax molded case circuit breakers
# Overall dimensions

## TERMINALS

### Front (F)

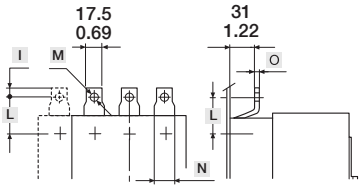


### Front for Cu cables (FC Cu)

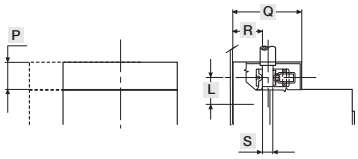


### Rear threaded (R)

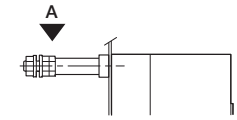


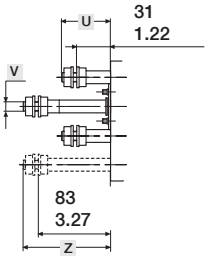


| Letter | I | L | M | N | O | P | Q | R | S | U | V | Z |
|---|---|---|---|---|---|---|---|---|---|---|---|---|
| mm | 10 | 33.5 | Ø8.5 | 20 | 5 | 37.5 | 79.5 | 36 | 18x18 | 48 | M12 | 100 |
| in | 0.39 | 1.32 | Ø0.33 | 0.79 | 0.20 | 1.48 | 3.13 | 1.42 | 0.71x0.71 | 1.89 | | 3.94 |

# Tmax molded case circuit breakers
# Overall dimensions

## DRILLING TEMPLATES

### Support sheet (minimum thickness of sheet metal 0.12” / 3mm)

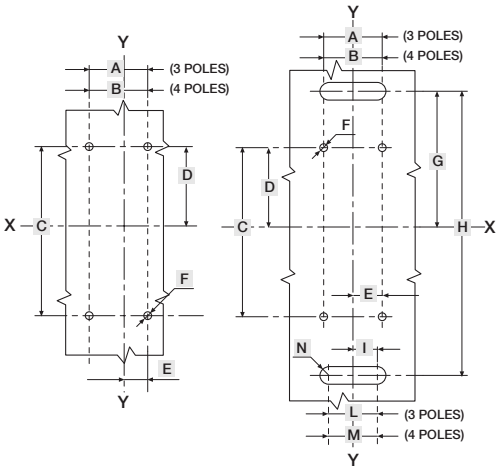


For front terminals

For rear threaded terminals

## DRILLING TEMPLATES

### Compartment door and fitting flange (minimum thickness of sheet metal 0.08” / 2mm)

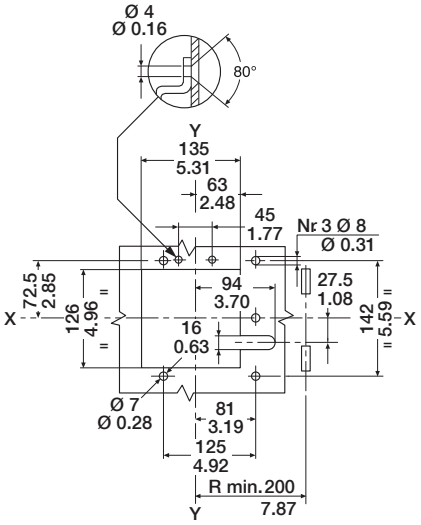


| Dimensions | A | B | C | D | E | F | G | H | I | L | M | N |
|---|---|---|---|---|---|---|---|---|---|---|---|---|
| mm | 70 | 105 | 100 | 52.25 | 25 | M4-Ø5 | 73.75 | 143 | 35 | 70 | 105 | R14 |
| in | 2.76 | 4.13 | 3.94 | 2.06 | 0.98 | M4-Ø0.20 | 2.90 | 5.63 | 1.38 | 2.76 | 4.13 | R0.55 |

# Tmax molded case circuit breakers
# Overall dimensions

## T4 DRAW OUT VERSION

**T4 3P/4P**
Fixing on sheet

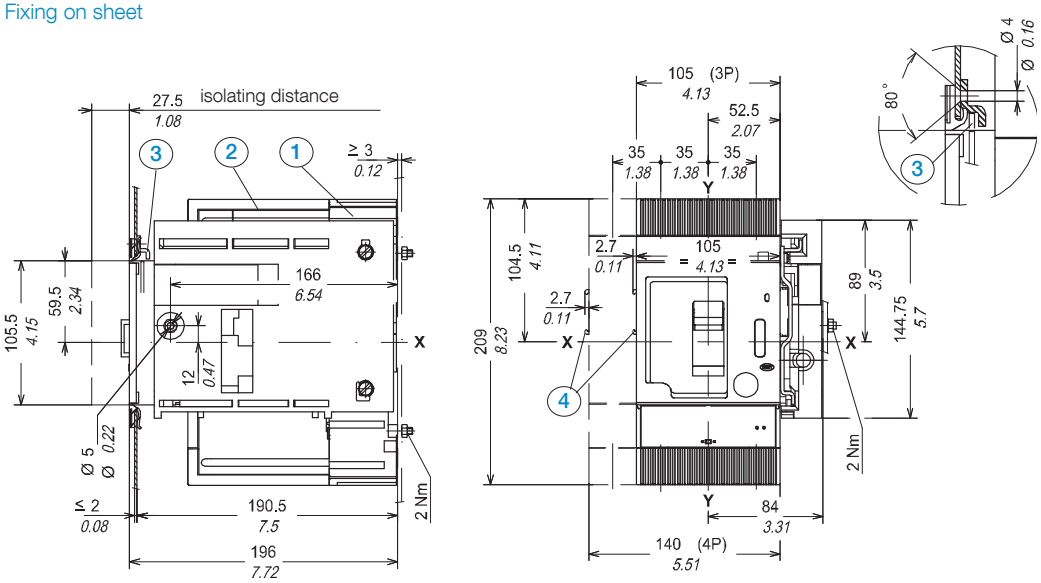


## Caption

1. Fixed part
2. Moving part
3. Lock for compartment door (available on request)
4. Overall dimensions with cabled accessories mounted (SOR-C, UVR-C)

# Tmax molded case circuit breakers
# Overall dimensions

## TERMINALS

### Front for Cu Cables (FC-Cu)

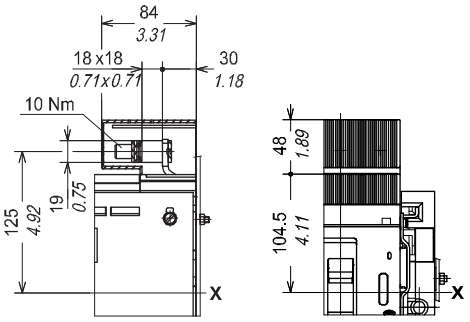


### Front for CuAl cables (FC CuAl)

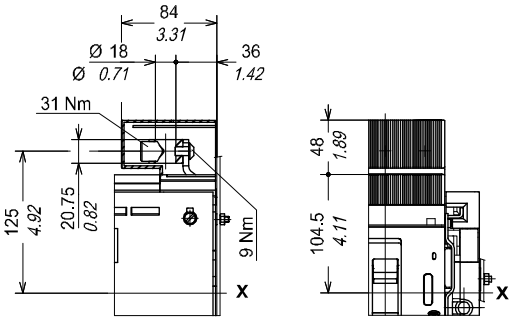


### Front extended (EF)

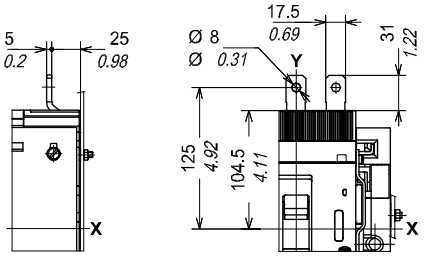

# Tmax molded case circuit breakers
## Overall dimensions

### TERMINALS (continued)
#### Rear vertical (VR)

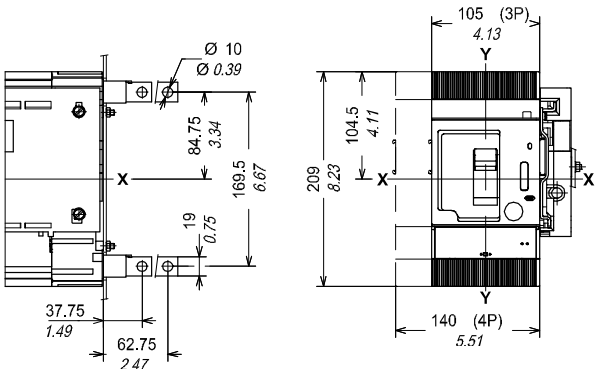


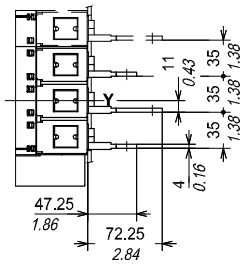


#### Rear horizontal (HR)

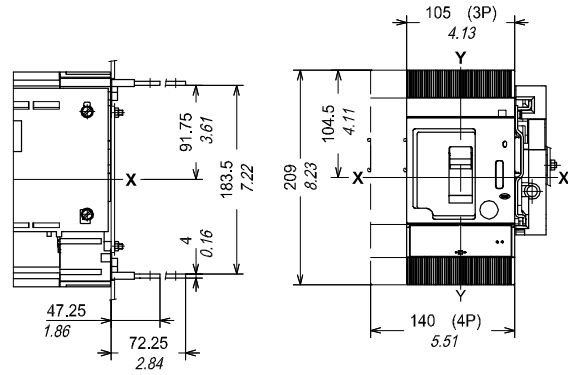


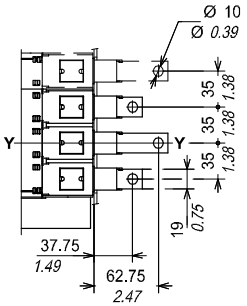

# Tmax molded case circuit breakers
# Overall dimensions

## DRILLING TEMPLATES
### Support sheet

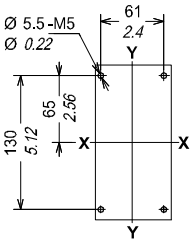


3 poles with front terminals

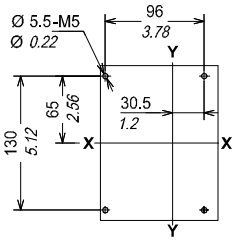


4 poles with front terminals

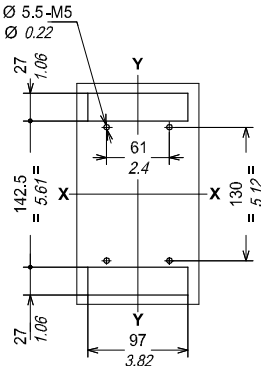


3 poles with rear terminals (HR/VR)

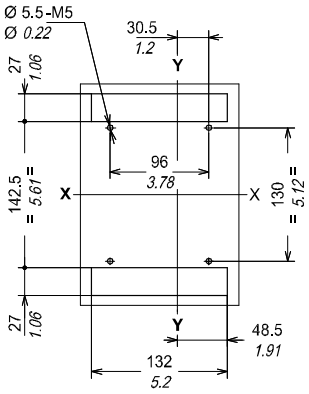


4 poles with rear terminals (HR/VR)

## DRILLING TEMPLATES
### Compartment door

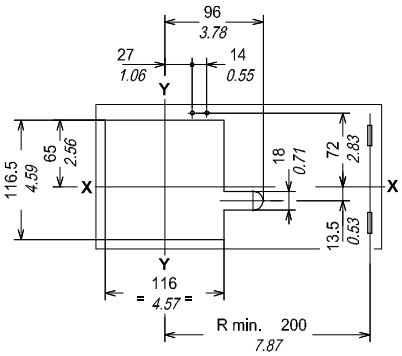


## Flange for the compartment door

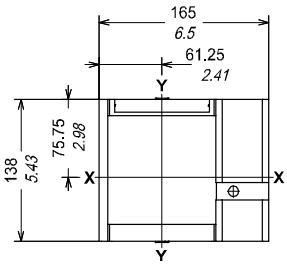

# Tmax molded case circuit breakers
# Overall dimensions

## T5 DRAW OUT VERSION

**T5 3P/4P**
Fixing on sheet

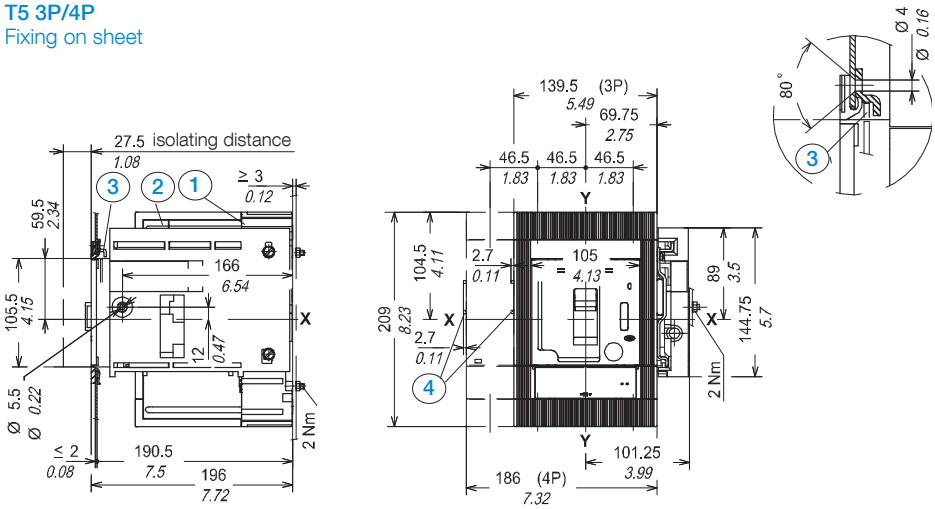


### Caption

1. Fixed part
2. Moving part
3. Lock for compartment door (available on request)
4. Overall dimensions with cabled accessories mounted (SOR-C, UVR-C)

# Tmax molded case circuit breakers
# Overall dimensions

## TERMINALS

### Front for Cu or CuAl Cables (FC-Cu/CuAL)

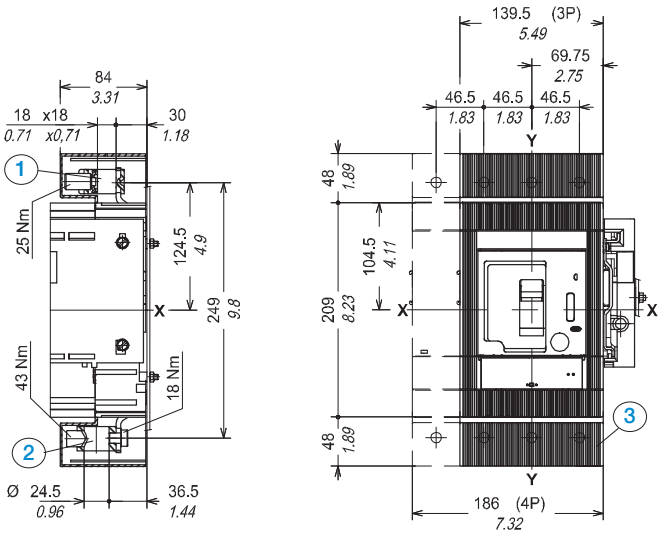


### Caption

1. For Cu cables
2. For CuAl cables
3. High terminal covers with IP40 protection degree

### Front extended (EF)

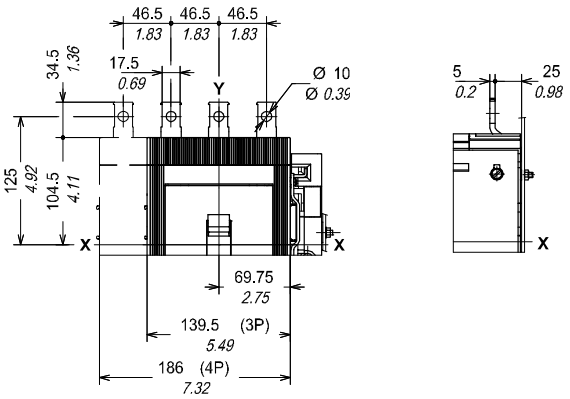

# Tmax molded case circuit breakers
## Overall dimensions

### TERMINALS (continued)

#### Rear vertical (VR)

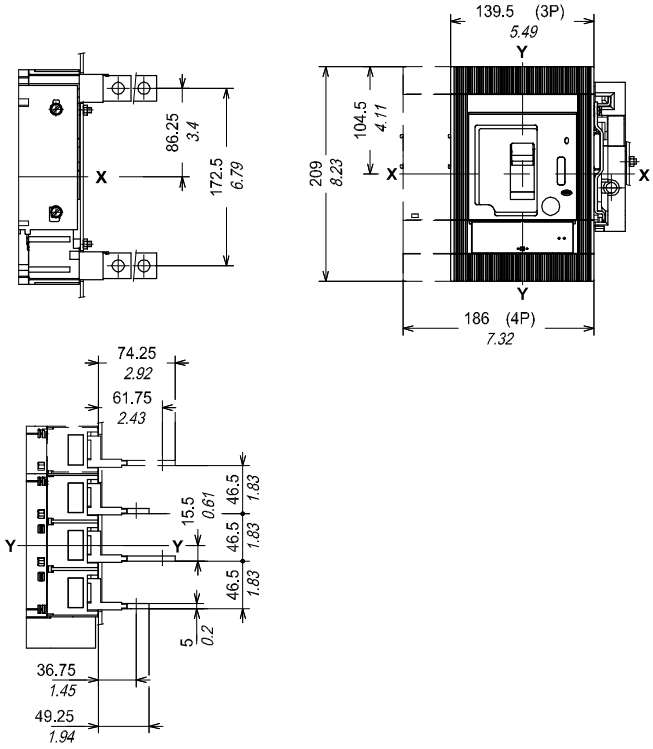


#### Rear horizontal (HR)

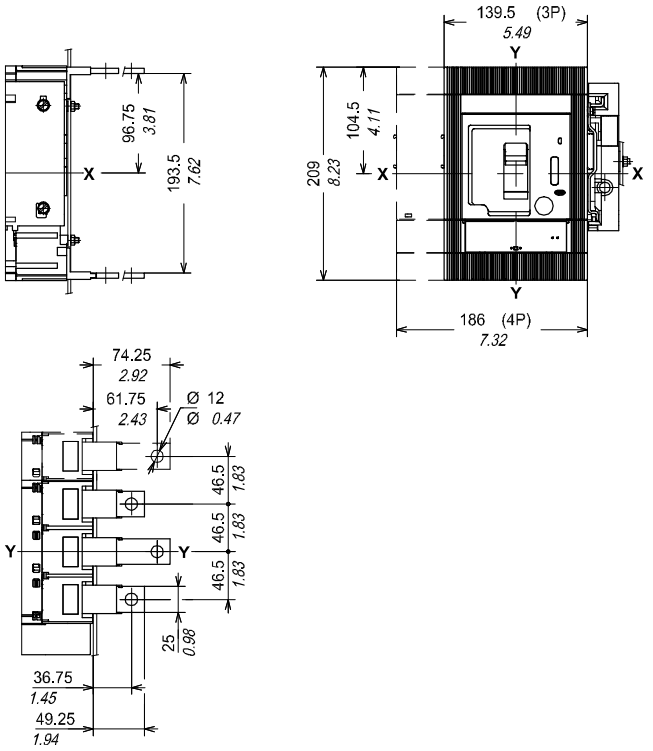

# Tmax molded case circuit breakers
# Overall dimensions

## DRILLING TEMPLATES
### Support sheet

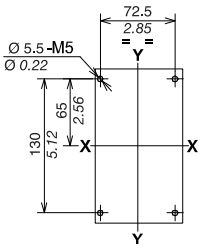


3 poles with front terminals (FC Cu/ CuAl)

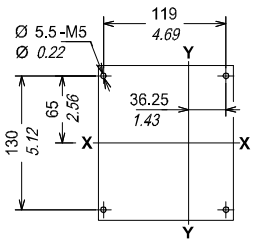


4 poles with front terminals (FC Cu/ CuAl)

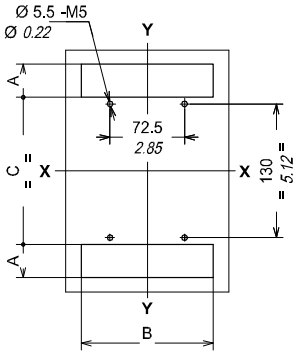


3 poles with rear terminals (HR/VR)

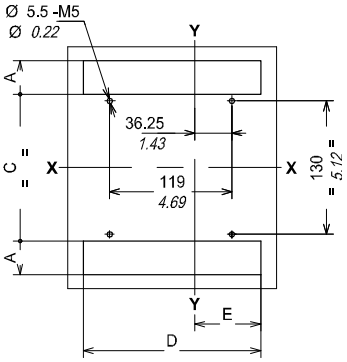


4 poles with rear terminals (HR/VR)

| Dimensions | A | B | C | D | E |
|---|---|---|---|---|---|
| mm | 32.5 | 128.5 | 143 | 172.5 | 64.5 |
| in | 1.28 | 5.06 | 5.63 | 6.79 | 2.54 |

## DRILLING TEMPLATES
### Compartment door

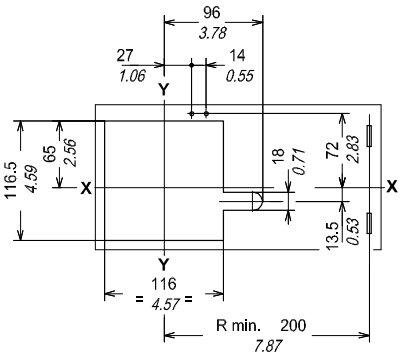


## Flange for the compartment door

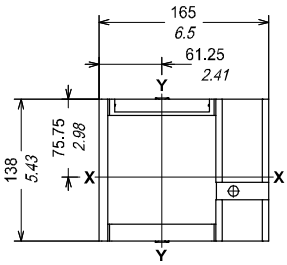

# Tmax molded case circuit breakers
# Overall dimensions

## T6 DRAW OUT VERSION

**T6 3P/4P**
Fixing on sheet

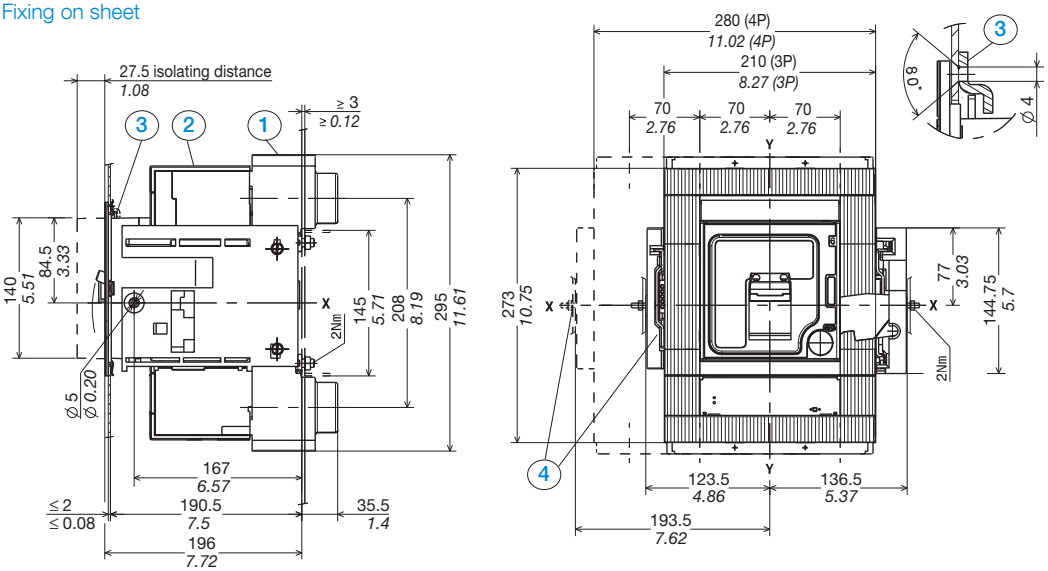


### Caption

1. Fixed part
2. Moving part
3. Lock for compartment door (available on request)
4. Overall dimensions with cabled accessories mounted (SOR-C, UVR-C)

# Tmax molded case circuit breakers
# Overall dimensions

## TERMINALS

### Front extended (EF)

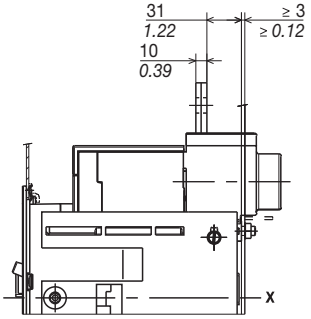


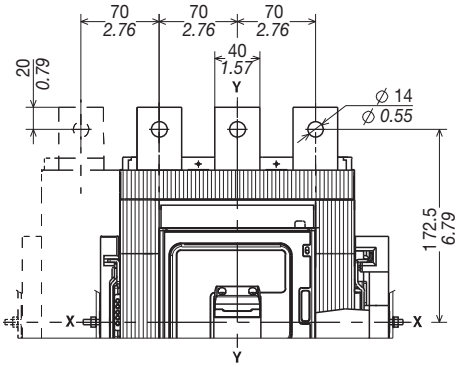


### Rear vertical (VR)

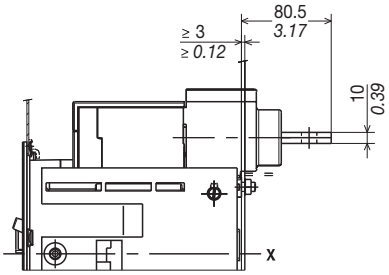


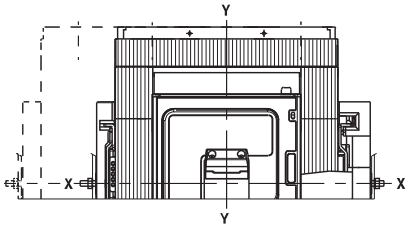


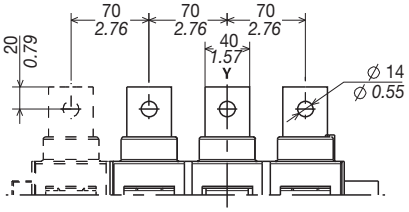


### Rear horizontal (HR)

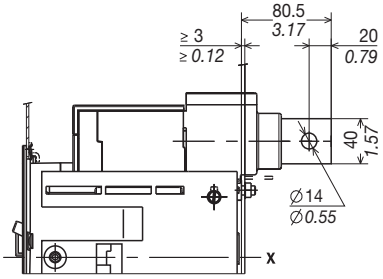


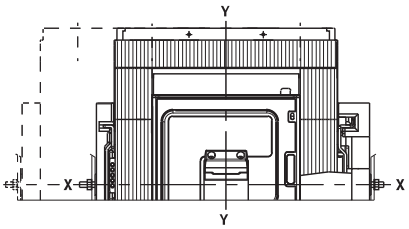


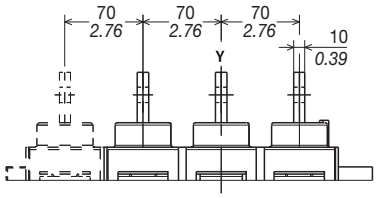

# Tmax molded case circuit breakers
# Overall dimensions

## DRILLING TEMPLATES
### Support sheet

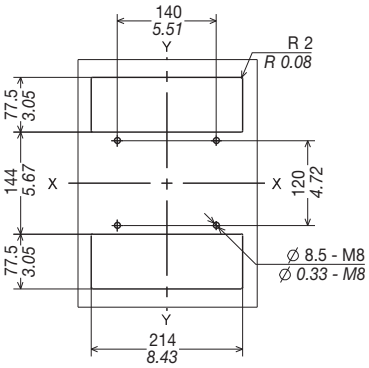


3 poles

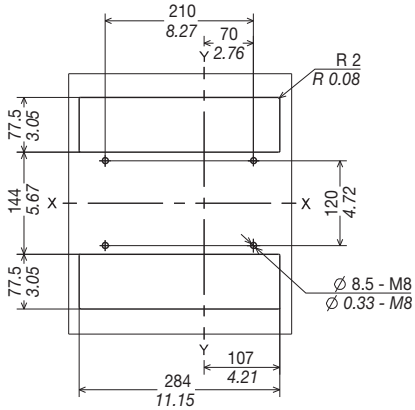


4 poles

## DRILLING TEMPLATES
### Compartment door

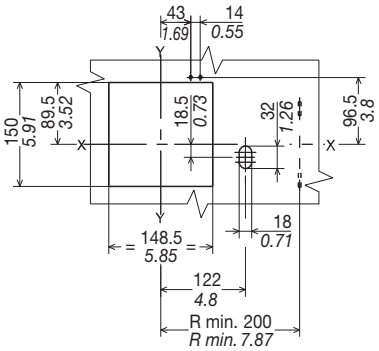


## Flange for the compartment door

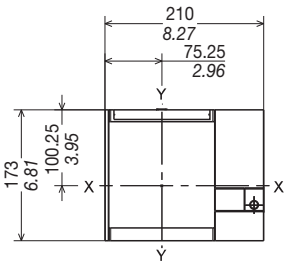

# Tmax molded case circuit breakers
# Overall dimensions

## T7 DRAW OUT VERSION

### T7 3P/4P
Fixing on sheet with front extended (EF)

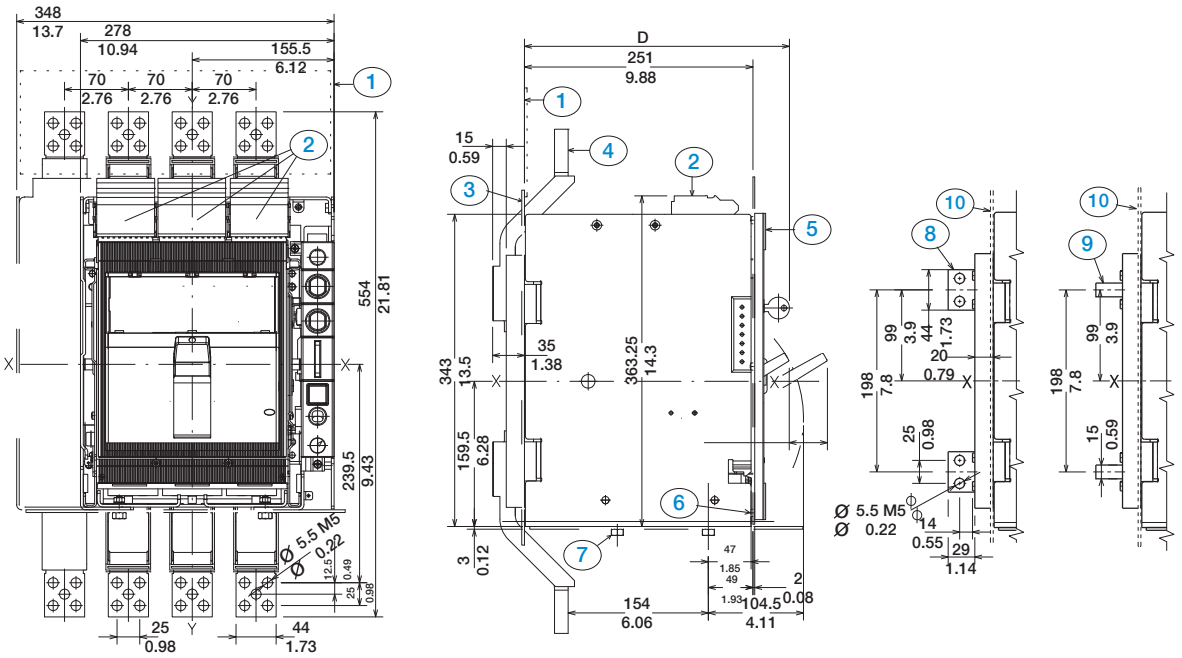


## Caption

1. Insulating protection
2. Auxiliary contact terminal
3. Rear segragation for front terminals
4. Front terminals
5. Flange for compartment door
6. Flange fixing screws (tightening torque 1.5 Nm)
7. Tightening torque 21 Nm
8. Rear vertical terminals
9. Rear horizontal terminals
10. Segregation for rear terminals

| Dimensions | Standard | Ronis | Profalux | Kirk | Castell |
|---|---|---|---|---|---|
| D mm | 287 | 291 | 299 | 298 | 328 |
| D in | 11.3 | 11.46 | 11.77 | 11.73 | 12.91 |

# Tmax molded case circuit breakers
## Overall dimensions

### TERMINALS

#### Rear spreaded (RS)

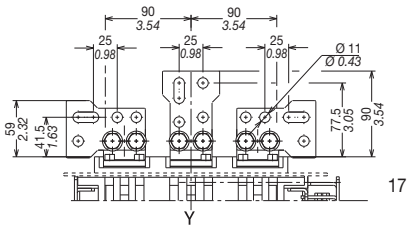


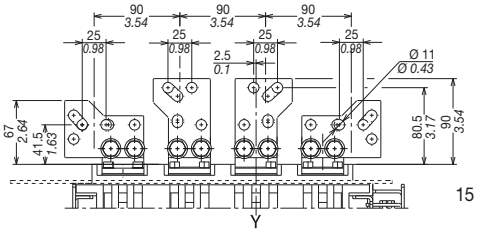


#### Rear vertical (VR)

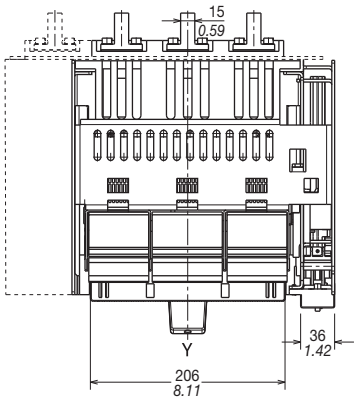


#### Rear horizontal (HR)

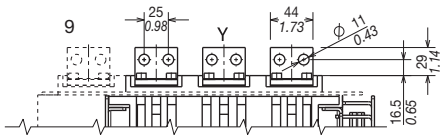

# Tmax molded case circuit breakers
# Overall dimensions

## DRILLING TEMPLATES
### Support sheet

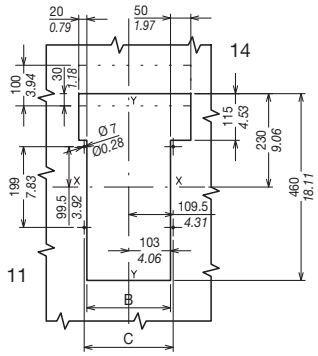


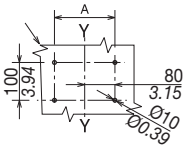


| Dimensions | 3 poles | 4 poles |
|---|---|---|
| A mm | 160 | 230 |
| A in | 6.3 | 9.05 |
| B mm | 206 | 276 |
| B in | 8.11 | 10.87 |
| C mm | 219 | 289 |
| C in | 8.62 | 11.38 |

## DRILLING TEMPLATES
### Compartment door

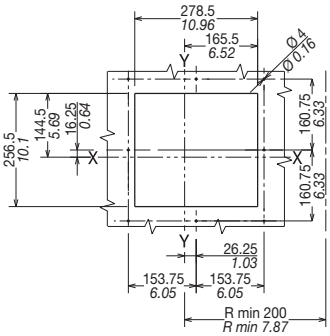


## Flange for the compartment door

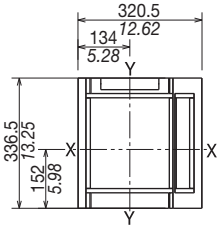

# Tmax molded case circuit breakers
## Overall dimensions

### T7 DRAW OUT VERSION

**T7 3P/4P**
Fixing on sheet with front extended (EF)

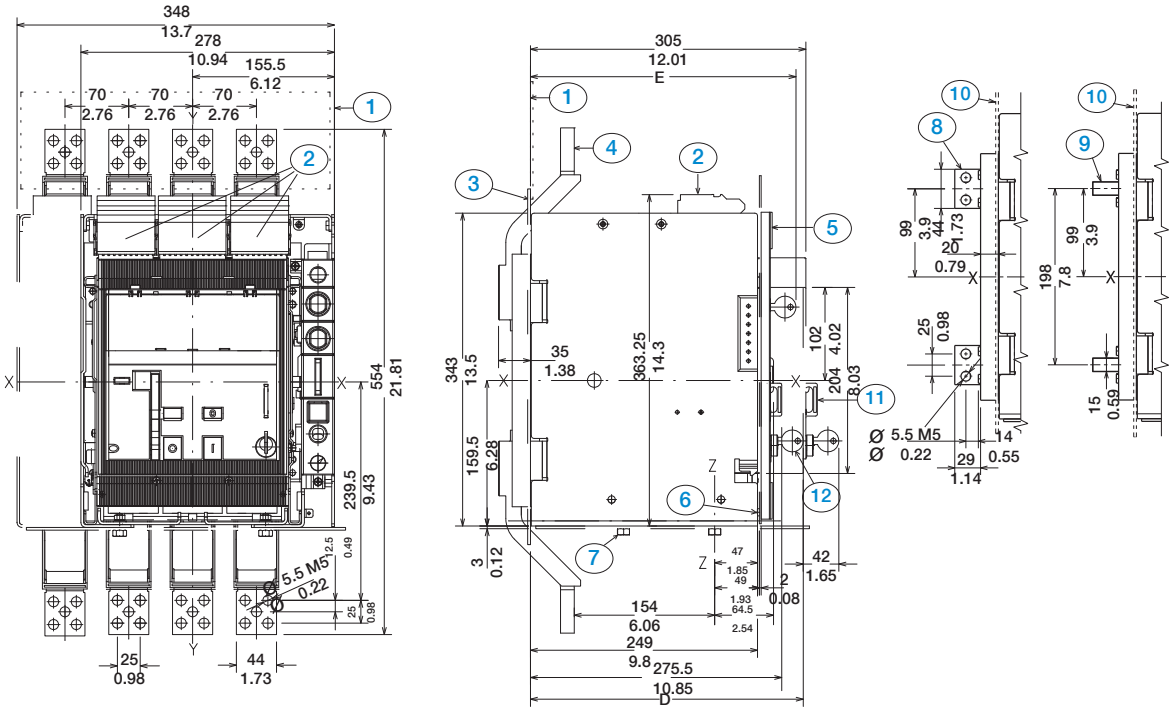


### Caption

1. Insulating protection
2. Auxiliary contact terminal
3. Rear segragation for front terminals
4. Front terminals
5. Flange for compartment door
6. Flange fixing screws (tightening torque 1.5 Nm)
7. Tightening torque 21 Nm
8. Rear vertical terminals
9. Rear horizontal terminals
10. Segregation for rear terminals
11. Padlock (optional)
12. Key lock (optional)

| Dimensions | Standard | Ronis | Profalux | Kirk | Castell |
|---|---|---|---|---|---|
| D mm | 290 | 298 | 306 | - | - |
| D in | 11.42 | 11.73 | 12.05 | - | - |
| E mm | 287 | 291 | 299 | 298 | 328 |
| E in | 11.3 | 11.46 | 11.77 | 11.73 | 12.91 |

# Tmax molded case circuit breakers
# Overall dimensions

## TERMINALS

### Rear spreaded (RS)

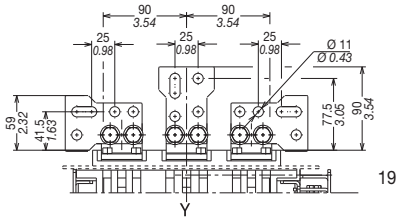


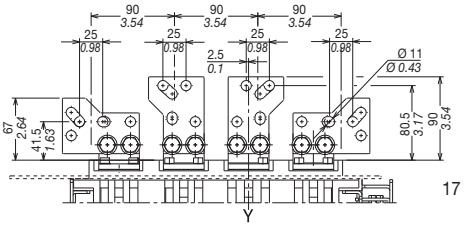


### Rear vertical (VR)

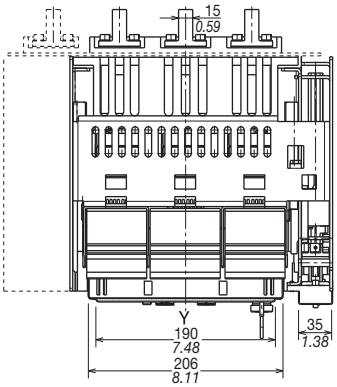


### Rear horizontal (HR)

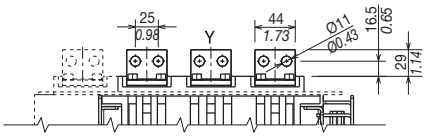

# Tmax molded case circuit breakers
# Overall dimensions

## DRILLING TEMPLATES
### Support sheet

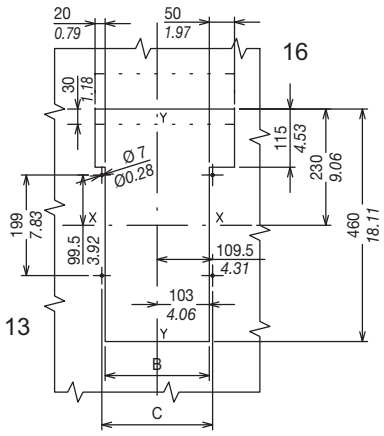


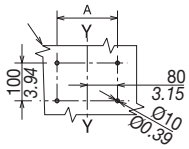


| Dimensions | 3 poles | 4 poles |
|---|---|---|
| A mm | 160 | 230 |
| A in | 6.3 | 9.05 |
| B mm | 206 | 276 |
| B in | 8.11 | 10.87 |
| C mm | 219 | 289 |
| C in | 8.62 | 11.38 |

## DRILLING TEMPLATES
### Compartment door

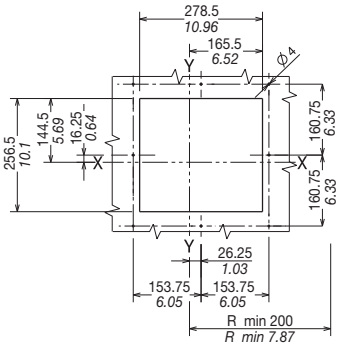


## Flange for the compartment door

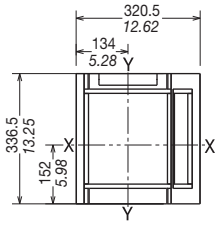

# Tmax molded case circuit breakers
## Overall dimensions

### ACCESSORIES T1-T2-T3
**Solenoid operator superimposed (fixed version)**

#### T1

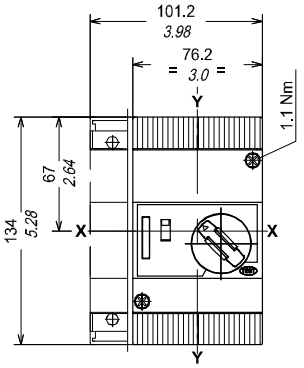


#### T2

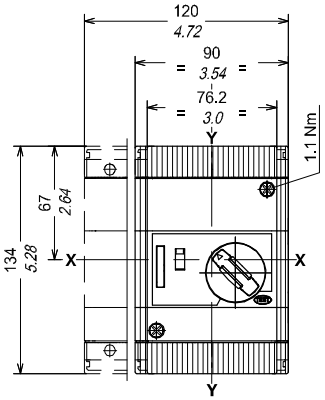


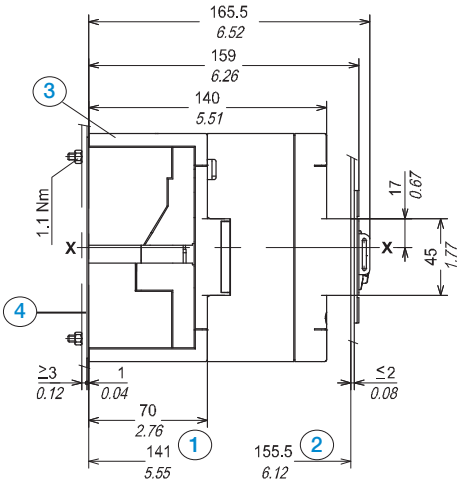


#### Caption

1. Depth of the switchboard with operating mechanism face extending
2. Depth of the switchboard with operating mechanism face flush with door
3. Low terminal covers with IP40 protection degree
4. Insulating plate

#### T3

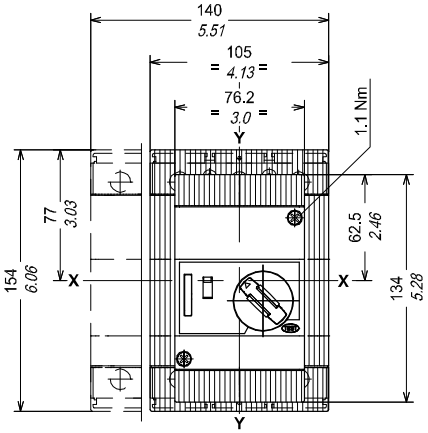


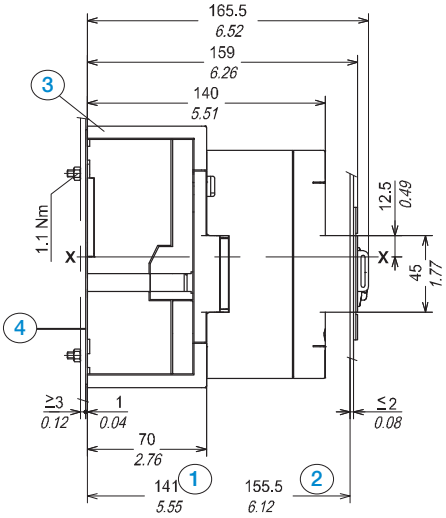


#### Caption

1. Depth of the switchboard with operating mechanism face extending
2. Depth of the switchboard with operating mechanism face flush with door
3. Low terminal covers with IP40 protection degree
4. Insulating plate

# Tmax molded case circuit breakers
# Overall dimensions

## DRILLING TEMPLATES
### Compartment door (for operating mechanism)

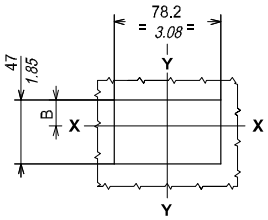


Without flange
Operating mechanism
face extending

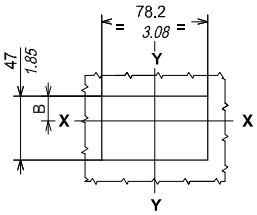


Without flange
Operating mechanism
face flush with door

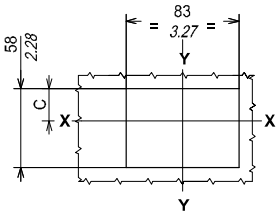


With flange
Operating mechanism
face flush with door

| Dimensions | A | B | C |
|---|---|---|---|
| T1 mm | 33.5 | 18 | 23.5 |
| T1 in | 1.32 | 0.71 | 0.93 |
| T2 mm | 33.5 | 18 | 23.5 |
| T2 in | 1.32 | 0.71 | 0.93 |
| T3 mm | 29 | 13.5 | 19 |
| T3 in | 1.14 | 0.53 | 0.75 |

## Flange for the compartment door

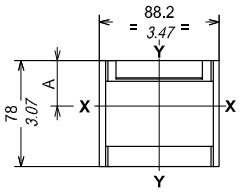

# Tmax molded case circuit breakers
# Overall dimensions

## ACCESSORIES T1-T2-T3
### Solenoid operator side by side (Fixed version)

### T1

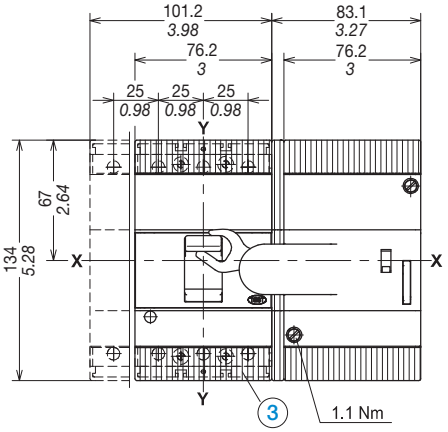


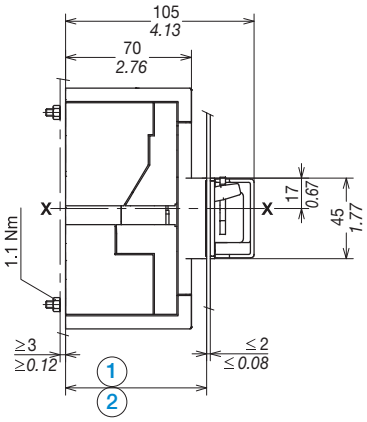


| Dimensions | A |
|---|---|
| 3P (1) mm | 79 |
| 3P (1) in | 3.11 |
| 3P (2) mm | 71 |
| 3P (2) in | 2.79 |
| 4P (1) mm | 79 |
| 4P (1) in | 3.11 |
| 4P (2) mm | 71 |
| 4P (2) in | 2.79 |

### Caption

1. Circuit breaker with face extending
2. Circuit breaker with face flush with door
3. Low terminal covers with IP40 protection degree

## DRILLING TEMPLATES
### Support sheet

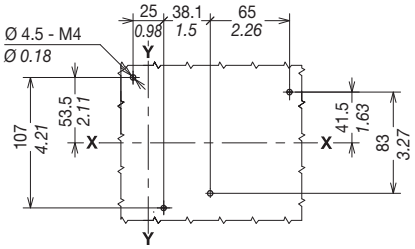


3 Poles

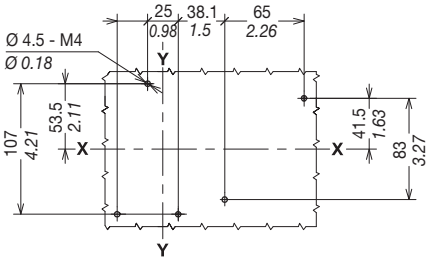


4 Poles

## DRILLING TEMPLATES
### Compartment door (for operating mechanism)

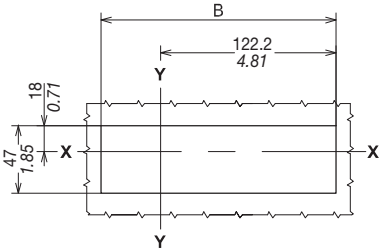


| Dimensions | B |
|---|---|
| 3P mm | 161.3 |
| 3P in | 6.35 |
| 4P mm | 161.3 |
| 4P in | 6.35 |

# Tmax molded case circuit breakers
# Overall dimensions

## ACCESSORIES T1-T2-T3
### Solenoid operator side by side (Fixed version)

#### T2

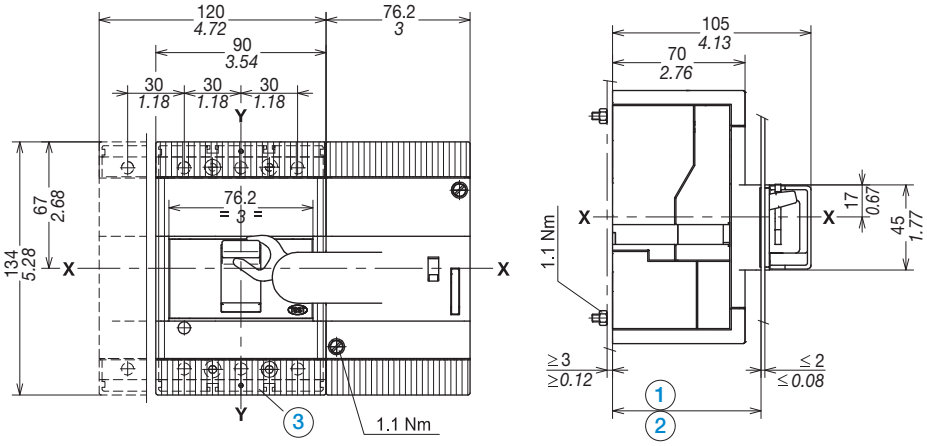


| Dimensions | A |
|---|---|
| 3P (1) mm | 79 |
| 3P (1) in | 3.11 |
| 3P (2) mm | 71 |
| 3P (2) in | 2.79 |
| 4P (1) mm | 79 |
| 4P (1) in | 3.11 |
| 4P (2) mm | 71 |
| 4P (2) in | 2.79 |

### Caption

1. Circuit breaker with face extending
2. Circuit breaker with face flush with door
3. Low terminal covers with IP40 protection degree

## DRILLING TEMPLATES
### Support sheet

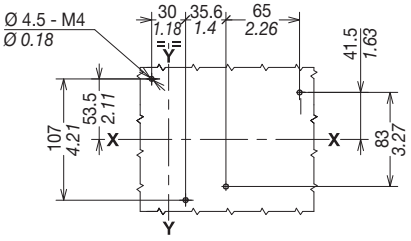


3 Poles

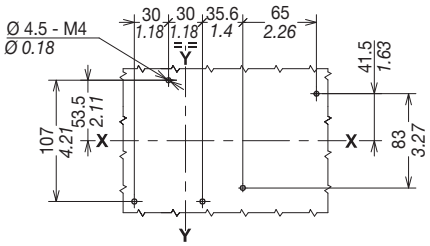


4 Poles

## DRILLING TEMPLATES
### Compartment door (for operating mechanism)

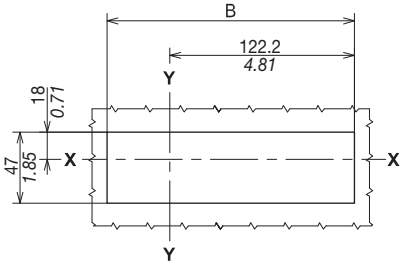


| Dimensions | B |
|---|---|
| 3P mm | 161.3 |
| 3P in | 6.35 |
| 4P mm | 161.3 |
| 4P in | 6.35 |

# Tmax molded case circuit breakers
# Overall dimensions

## ACCESSORIES T1-T2-T3
### Rotary handle on compartment door (mechanism + handle + shaft)

### T1 - T2 - T3

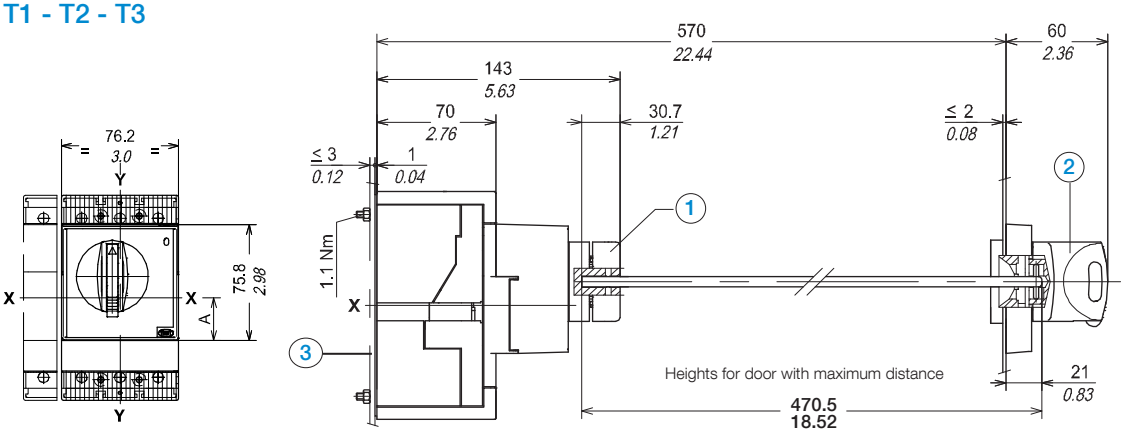


| Dimensions | A |
|---|---|
| T1-T2 mm | 28 |
| T1-T2 in | 1.10 |
| T3 mm | 32.5 |
| T3 in | 1.28 |

### Caption

1. Mechanism
2. Rotary handle on door
3. Insulating plate

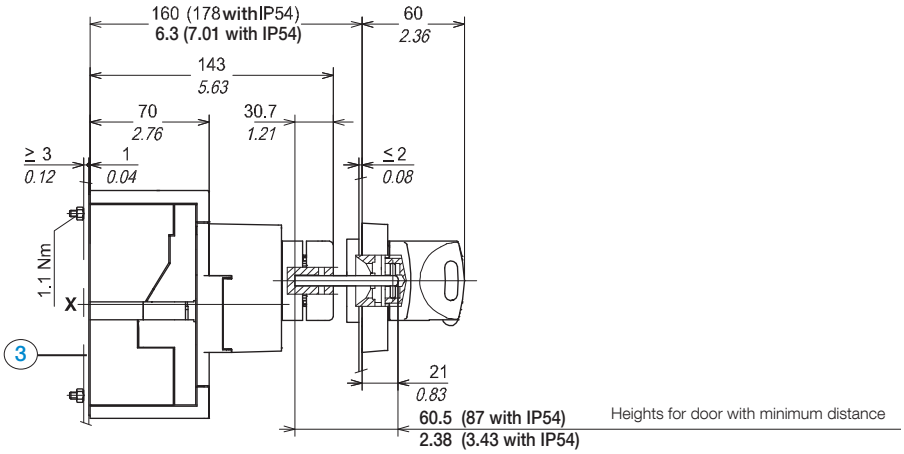


## DRILLING TEMPLATES
### Compartment door (for operating mechanism)

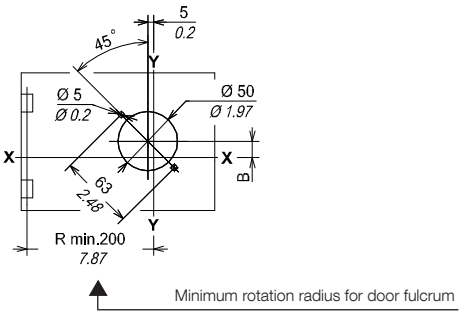


| Dimensions | B |
|---|---|
| T1-T2 mm | 14 |
| T1-T2 in | 0.55 |
| T3 mm | 9.5 |
| T3 in | 0.37 |

# Tmax molded case circuit breakers
# Overall dimensions

## ACCESSORIES T1-T2-T3
### Rotary handle on breaker

### T1 - T2 - T3

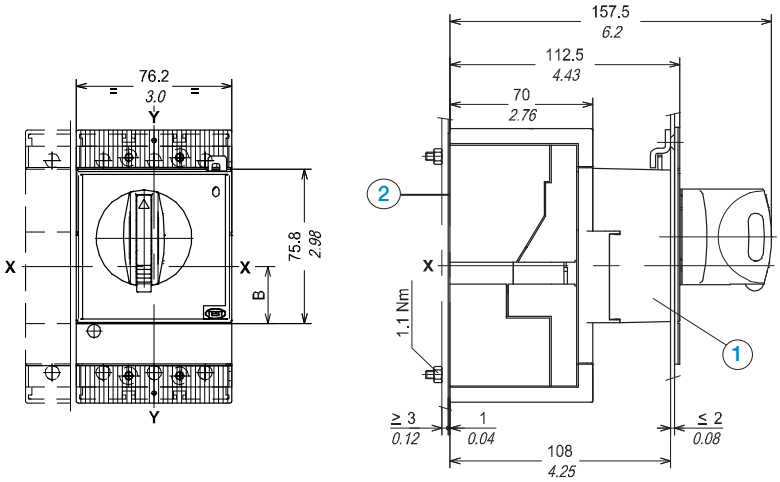


| Dimensions | B |
|---|---|
| T1-T2 mm | 28 |
| T1-T2 in | 1.10 |
| T3 mm | 32.5 |
| T3 in | 1.28 |

### Caption

1. Rotary handle mechanism
2. Insulating plate

## DRILLING TEMPLATES
### Compartment door

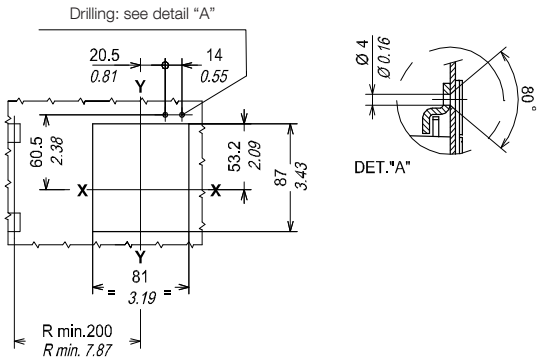


## Flange for the compartment door

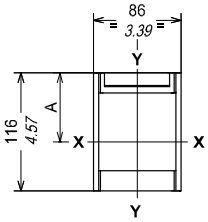


| Dimensions | A |
|---|---|
| T1-T2 mm | 67.7 |
| T1-T2 in | 2.67 |
| T3 mm | 63.2 |
| T3 in | 2.49 |

# Tmax molded case circuit breakers
# Overall dimensions

## ACCESSORIES T1-T2-T3

### Mechanical front interlock plate between 2 circuit breakers (T1-T2-T3)

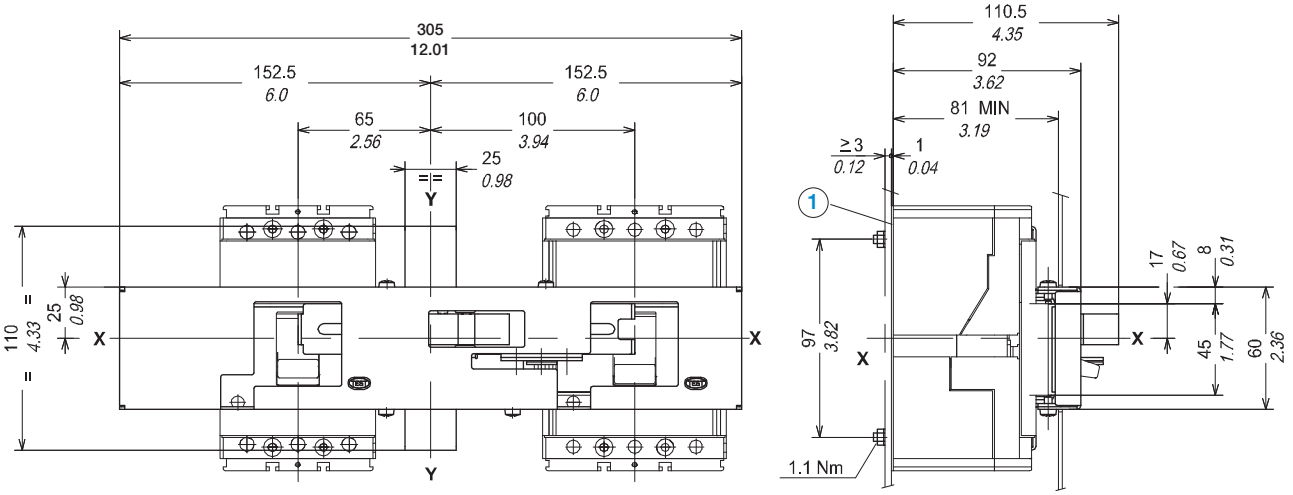


### Caption

(1) Insulating plate

### Mechanical front interlock plate between 3 circuit breakers (T1-T2-T3)

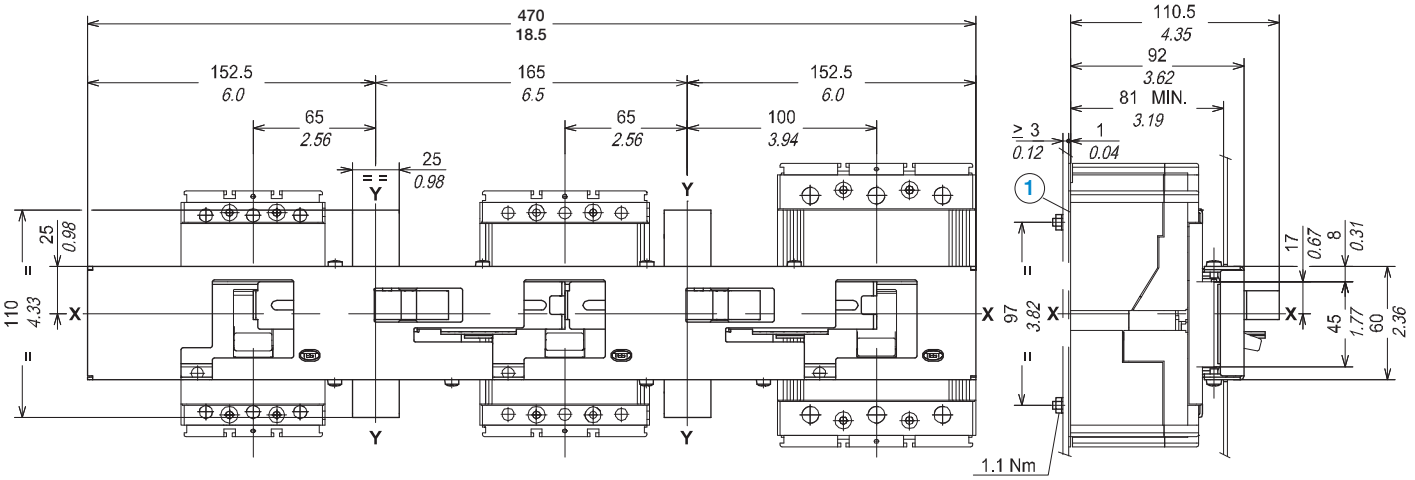


### Caption

(1) Insulating plate

# Tmax molded case circuit breakers
# Overall dimensions

## DRILLING TEMPLATES
### Support sheet

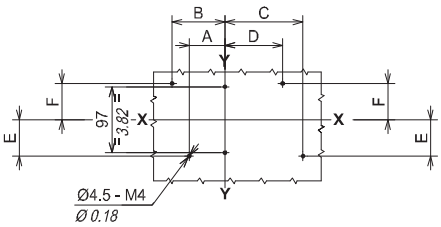


For 2 circuit breakers

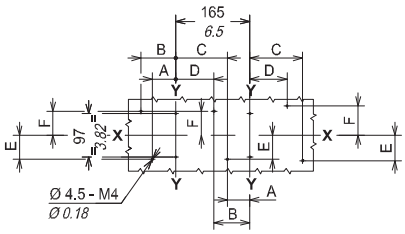


For 3 circuit breakers

| Dimensions | A | B | C | D | E | F |
|---|---|---|---|---|---|---|
| T1 mm | 52.5 | 77.5 | 112.5 | 87.5 | 53.5 | 53.5 |
| T1 in | 2.07 | 3.05 | 4.43 | 3.44 | 2.11 | 2.11 |
| T2 mm | 50 | 80 | 115 | 85 | 53.5 | 53.5 |
| T2 in | 1.97 | 3.15 | 4.53 | 3.35 | 2.11 | 2.11 |
| T3 mm | 47.5 | 82.5 | 117.5 | 82.5 | 56.5 | 65.5 |
| T3 in | 1.87 | 3.25 | 4.63 | 3.25 | 2.22 | 2.58 |

## DRILLING TEMPLATES
### Compartment door

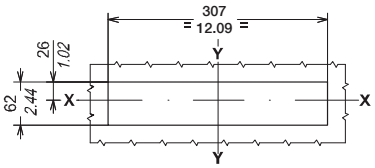


For 2 circuit breakers

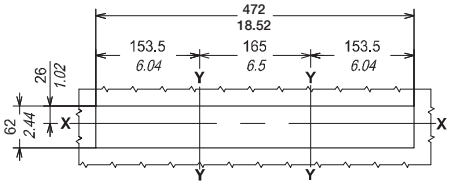


For 3 circuit breakers

# Tmax molded case circuit breakers
## Overall dimensions

### ACCESSORIES T1-T2-T3
#### Mechanical rear horizontal interlock between 2 circuit breakers (T3)

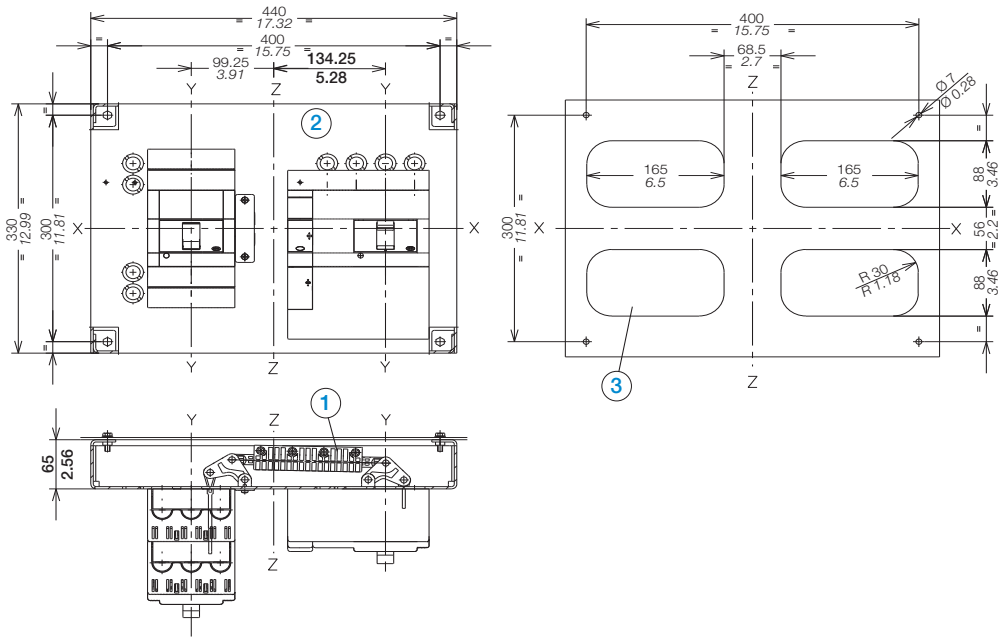


### Caption

1. Interlocking mech.
2. Adaptor plate
3. drilling template for all terminal versions

#### Mechanical rear vertical interlock between 2 circuit breakers (T3)

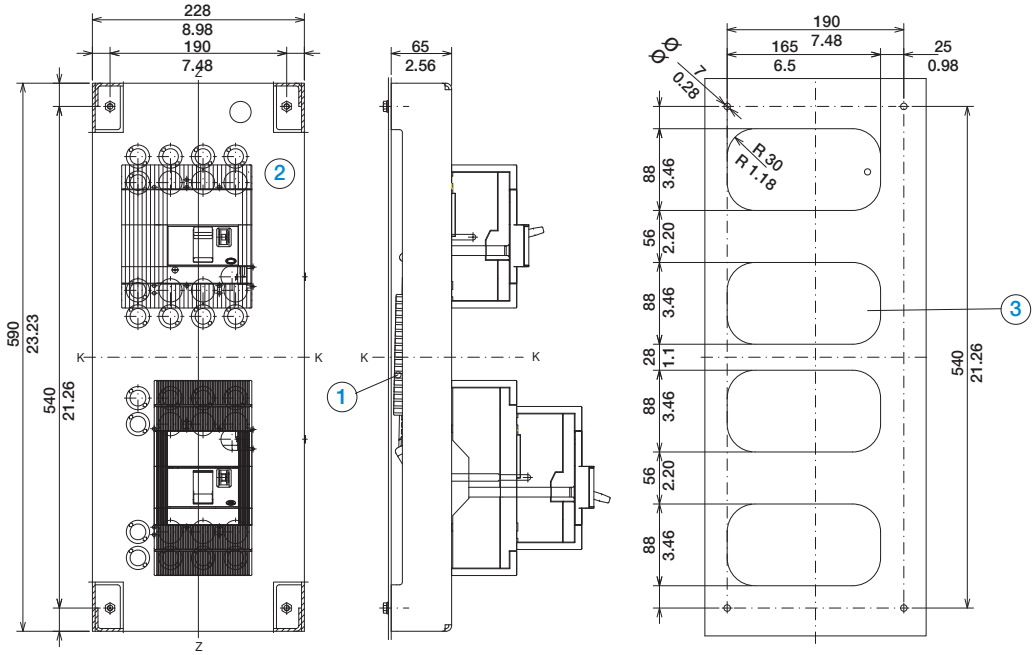


### Caption

1. Interlocking mech.
2. Adaptor plate
3. drilling template for all terminal versions

The mechanical rear vertical interlock for Tmax T3 is not compatible with the RC221 and RC222 residual current releases

# Tmax molded case circuit breakers
## Overall dimensions

### ACCESSORIES T1-T2-T3
#### Protection kit IP42

#### T1 Fixed

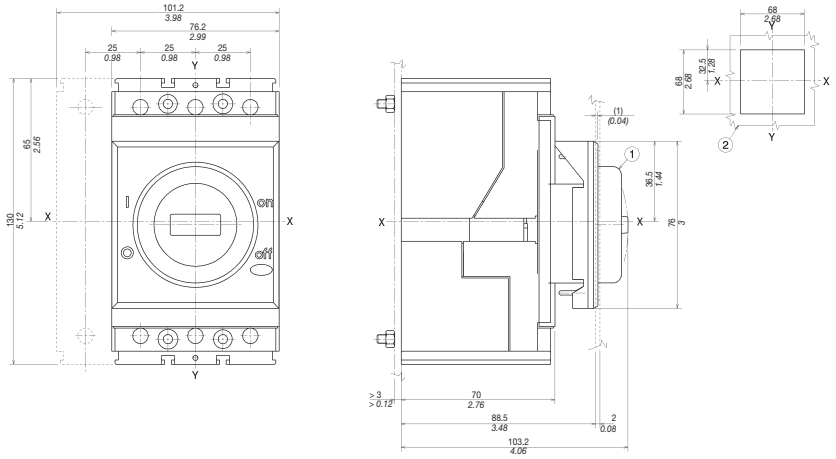


### Caption

1. IP42 protection.
2. Compartment door drilling

#### T2 Fixed

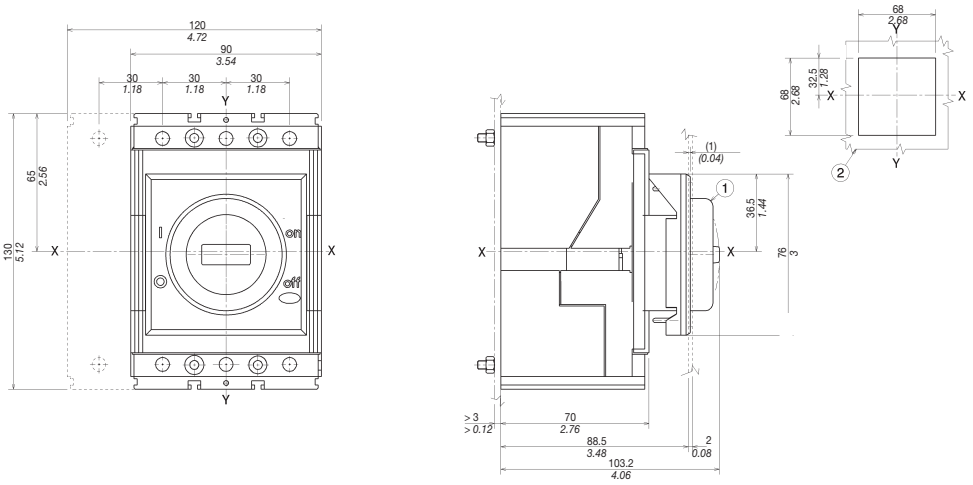


### Caption

1. IP42 protection.
2. Compartment door drilling

#### T3 Fixed

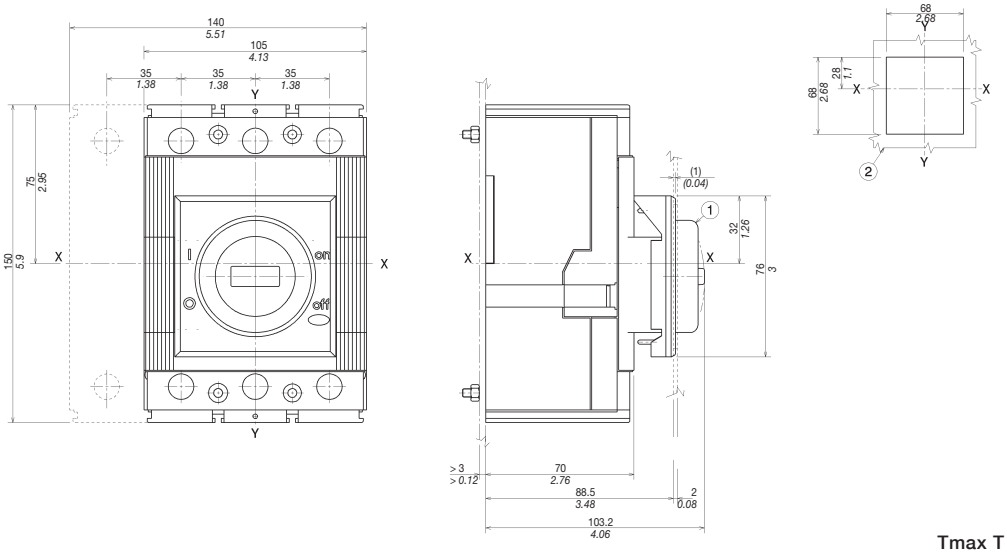


### Caption

1. IP42 protection.
2. Compartment door drilling

# Tmax molded case circuit breakers
## Overall dimensions

### ACCESSORIES Ts3
#### Motor operator for fixed circuit breaker

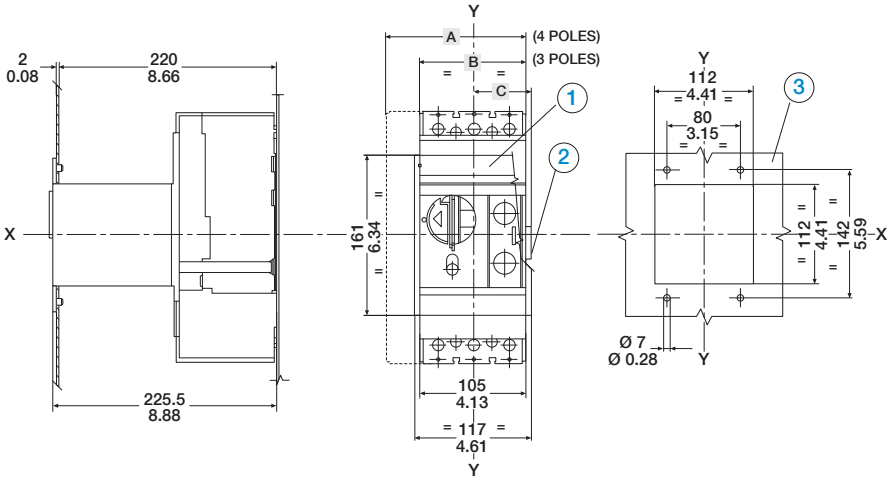


#### Caption

1. Flange for compartment door.
2. Dimensions with connectors
3. Drilling of compartment door

| Dimensions | A | B | C |
|---|---|---|---|
| mm | 140 | 105 | 58 |
| in | 5.51 | 4.13 | 2.28 |

#### Motor operator for plug in circuit breakers

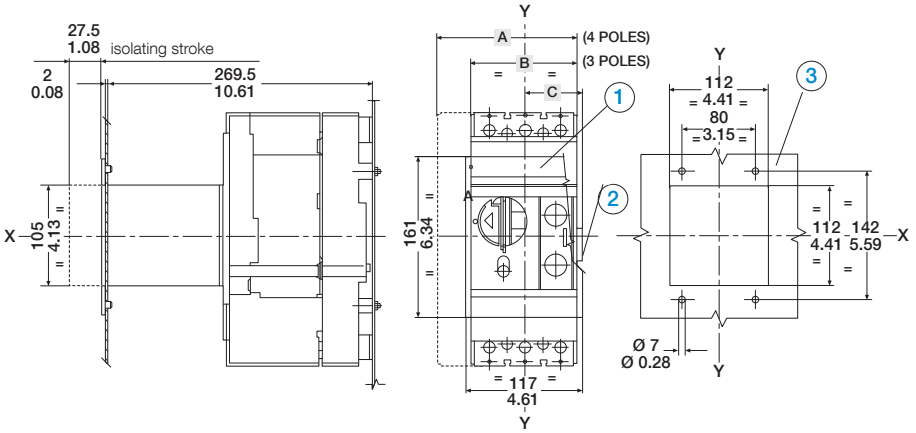


#### Caption

1. Flange for compartment door.
2. Dimensions with connectors
3. Drilling of compartment door

| Dimensions | A | B | C |
|---|---|---|---|
| mm | 140 | 105 | 58 |
| in | 5.51 | 4.13 | 2.28 |

#### Motor operator for draw out circuit breakers

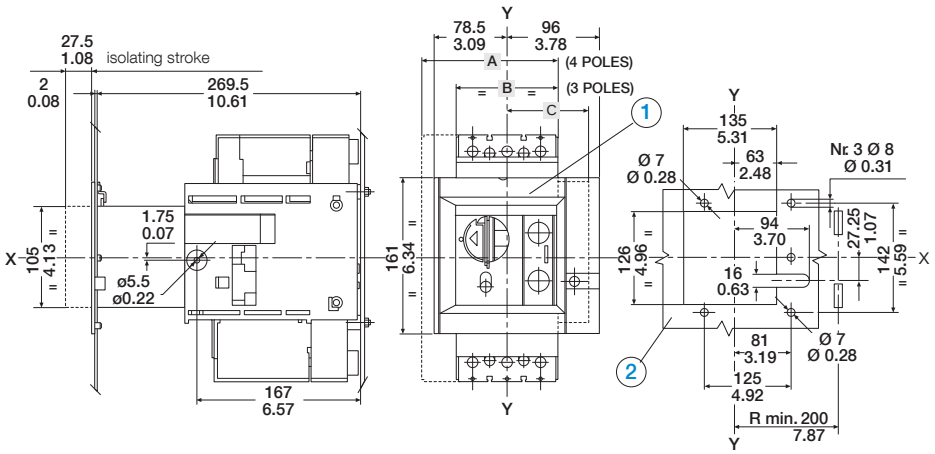


#### Caption

1. Flange for compartment door.
2. Drilling of compartment door

| Dimensions | A | B | C |
|---|---|---|---|
| mm | 140 | 105 | 58 |
| in | 5.51 | 4.13 | 2.28 |

# Tmax molded case circuit breakers
## Overall dimensions

### ACCESSORIES Ts3
#### Mechanical interlock between 2 horizontal circuit breakers

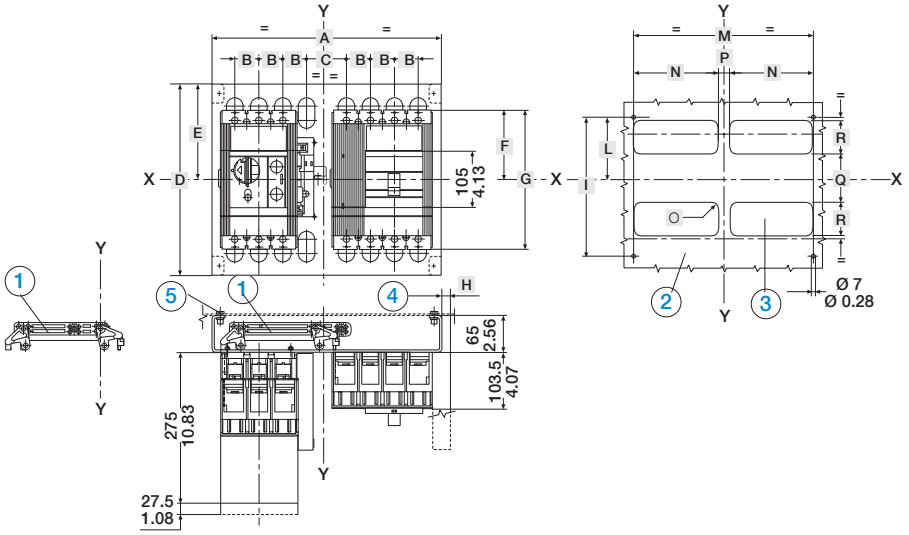


**Caption**

1. Interlock device
2. Drilling template mounting holes in sheet metal
3. Drilling template all versions with rear terminals
4. Dimensions with 4 pole drawout version mounted on right
5. Tightening torque 3.7 Nm

| Dimensions | A | B | C | D | E | F | G | H | I | L | M | N | O | P | Q | R |
|---|---|---|---|---|---|---|---|---|---|---|---|---|---|---|---|---|
| mm | 350 | 35 | 66 | 265 | 134.5 | 87.2 | 170 | 12 | 227.5 | 116 | 324 | 155 | R15 | 16 | 68 | 75 |
| in | 13.78 | 1.38 | 2.60 | 10.43 | 5.30 | 3.43 | 6.69 | 0.47 | 8.96 | 4.57 | 12.76 | 6.10 | R0.59 | 0.63 | 2.68 | 2.95 |

#### Mechanical interlock between 2 vertical circuit breakers

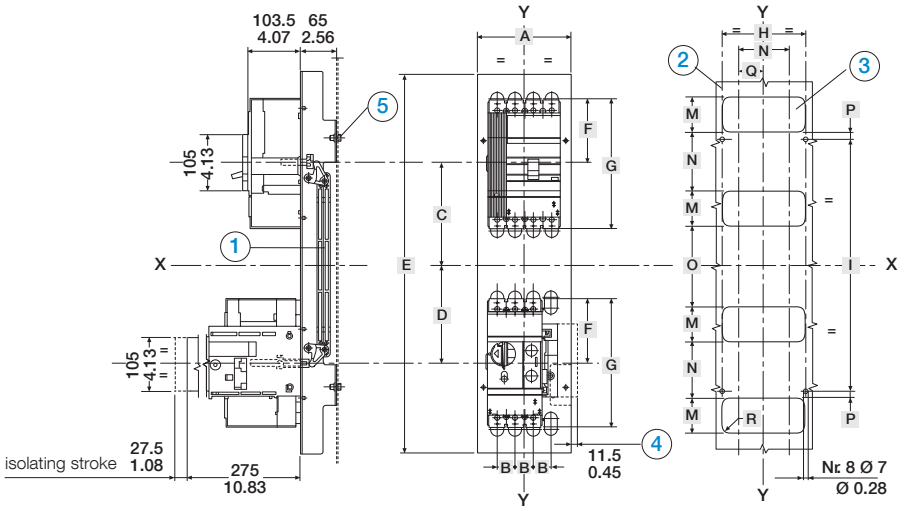


**Caption**

1. Interlock device
2. Drilling template mounting holes in sheet metal
3. Drilling template all versions with rear terminals
4. Dimensions with 4 pole drawout version mounted on right
5. Tightening torque 3.7 Nm

| Dimensions | A | B | C | D | E | F | G | H | I | L | M | N | O | P | Q | R |
|---|---|---|---|---|---|---|---|---|---|---|---|---|---|---|---|---|
| mm | 180 | 35 | 152.5 | 157.5 | 578 | 87.5 | 170 | 157.5 | 350 | 155 | 75 | 68 | 92 | 14 | 77.5 | R15 |
| in | 7.09 | 1.38 | 6.00 | 6.20 | 22.76 | 3.44 | 6.69 | 6.20 | 13.78 | 6.10 | 2.95 | 2.68 | 3.62 | 0.55 | 3.05 | R0.59 |

# Tmax molded case circuit breakers
# Overall dimensions

## ACCESSORIES Ts3

### Rotary handle on breaker (fixed or plug in)

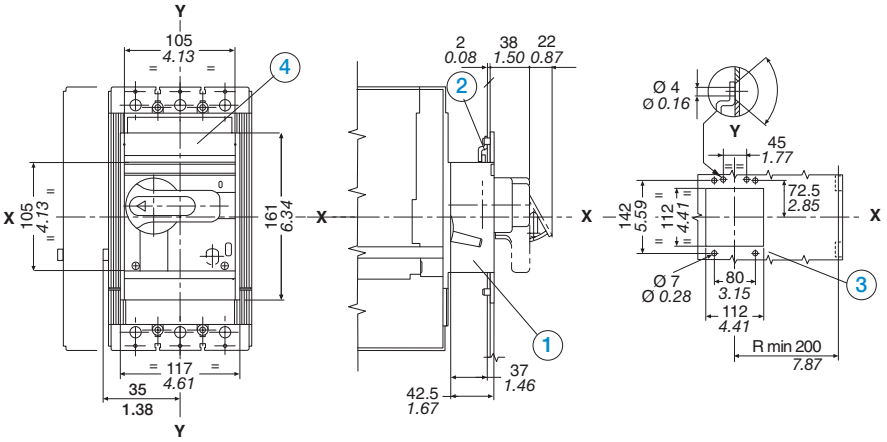


### Caption

1. Rotary handle mech.
2. Lock for compartment door (optional)
3. Drilling of compartment door
4. Flange for compartment door

### Rotary handle on compartment door (fixed or plug in with mechanism+shaft+handle)

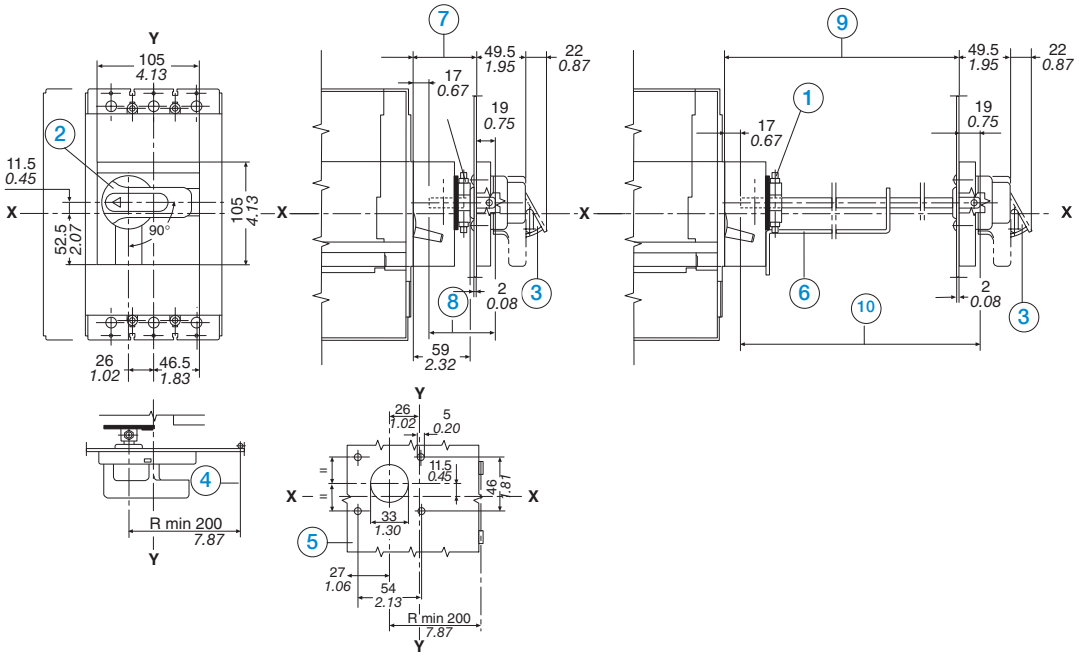


### Caption

1. Mechanism
2. Rotary handle
3. Padlock device for open position
4. Minimum radius of rotation for fulcrum of door
5. Drilling of compartment door
6. Support for depths up to 19.69” / 500 mm
7. 2.60”...11.81” / 66...300mm (with IP54 protection min. 90)
8. Distance (7) + 0.08” / 2mm (shaft length)
9. 11.85”...19.69” / 301...500mm (with IP54 protection min. 325)
10. Distance (9) + 0.08” / 2mm (shaft length)

# Tmax molded case circuit breakers
## Overall dimensions

### ACCESSORIES Ts3
#### Rotary handle on breaker (Draw out)

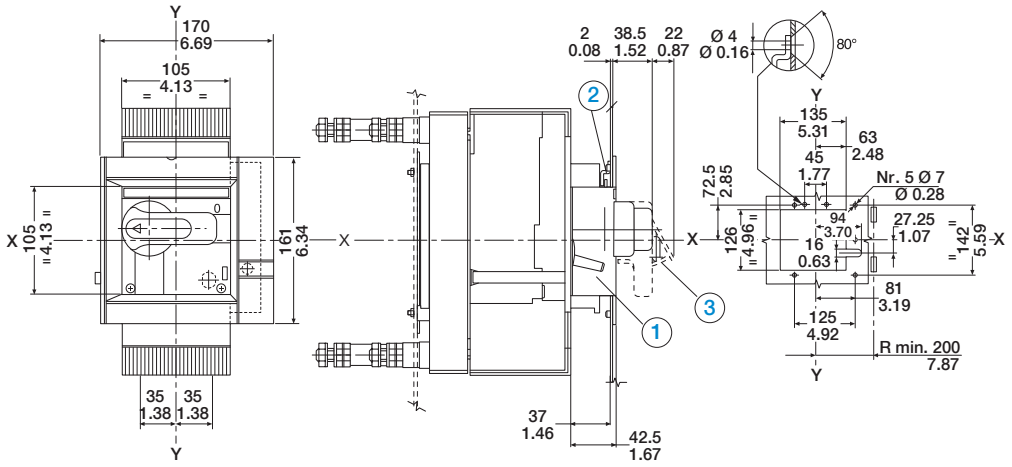


#### Caption

1. Rotary handle mech.
2. Lock for compartment door (optional)
3. Padlock device for open position (max. 3 padlocks 0.24” / 6mm)

#### Front flange for operating lever mechanism

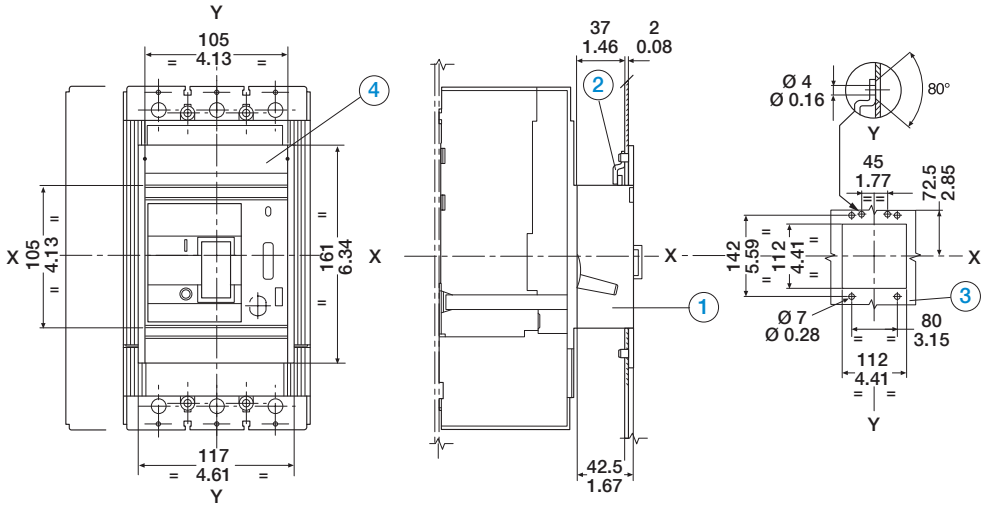


#### Caption

1. Front flange for operating mech.
2. Lock for compartment door (optional)
3. Drilling of compartment door
4. Flange for compartment door

## ACCESSORIES T4-T5

### Motor operator (fixed version)

#### T4 Fixed

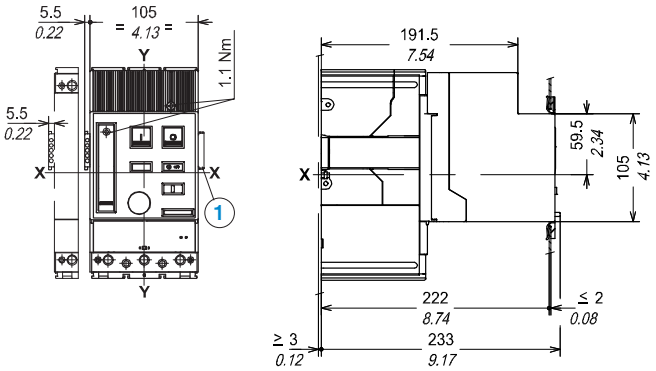


**Caption**

1 Overall dimensions with cabled auxiliary contacts (3Q+1SY only)

#### T5 Fixed

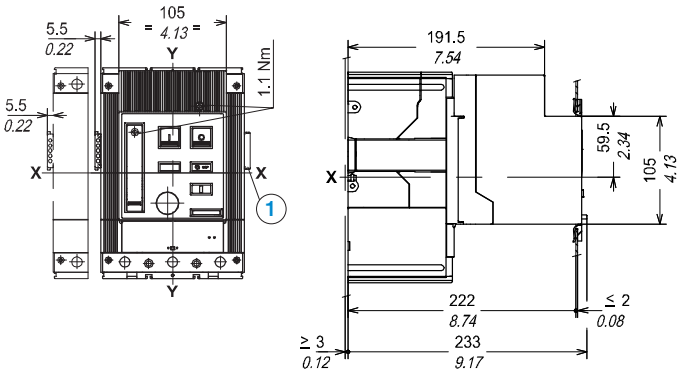


**Caption**

1 Overall dimensions with cabled auxiliary contacts (3Q+1SY only)

# Tmax molded case circuit breakers
# Overall dimensions

## DRILLING TEMPLATES
### Support sheet

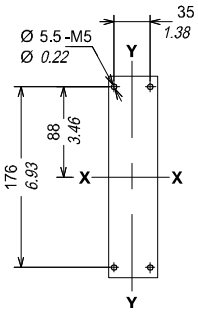

T4 - 3 pole

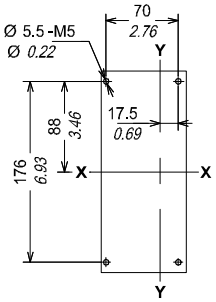

T4 - 4 pole

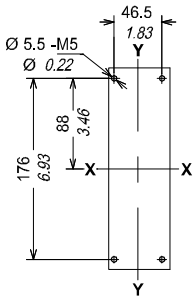

T5 - 3 pole

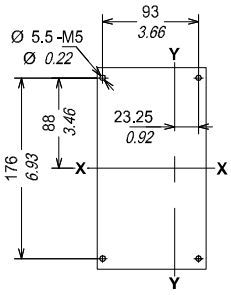

T5 - 4 pole

## DRILLING TEMPLATES
### Compartment door

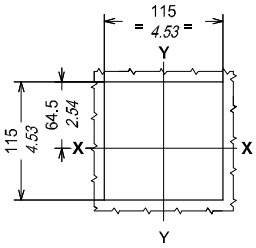

With flange

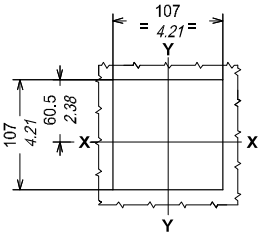

Without flange

## Flange for the compartment door

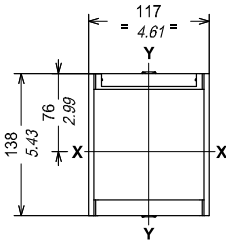

# Tmax molded case circuit breakers
# Overall dimensions

## ACCESSORIES T4-T5

### Rotary handle on compartment door (mechanism + shaft + handle)

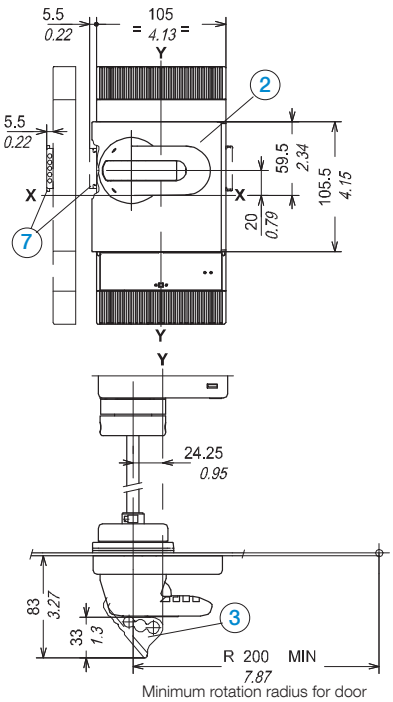


Minimum rotation radius for door fulcrum

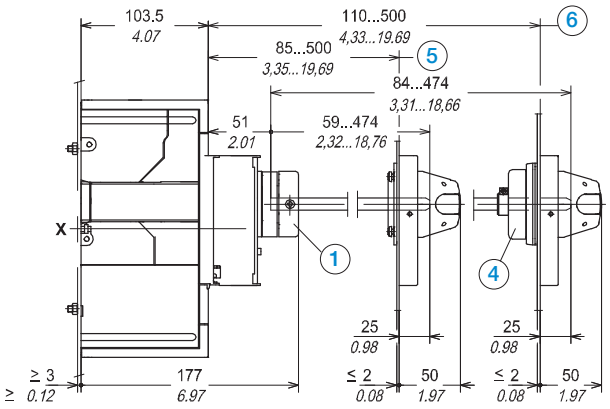


### Caption

1. Mechanism
2. Rotary handle
3. Padlock device open position (3 padlock max. )
4. IP54 protection (supplied on request)
5. Min...Max distance from the front of the door without 4
6. Min...Max distance from the front of the door with 4
7. Dimension with AUE connector (early make contact)

## DRILLING TEMPLATES

### Compartment door

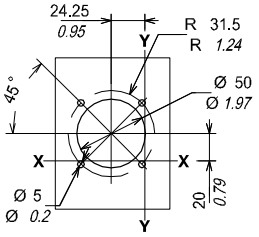

# Tmax molded case circuit breakers
# Overall dimensions

## ACCESSORIES T4-T5
### Rotary handle on breaker

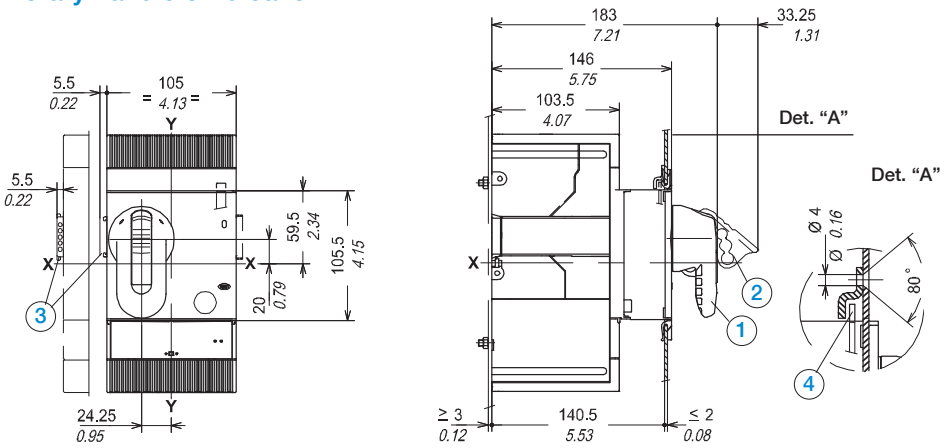


### Caption

1. Rotary handle on breaker
2. Padlock device open position (3 padlock max)
3. Dimension with AUE connector (early make contact)
4. Compartment door lock

## DRILLING TEMPLATES
### Compartment door

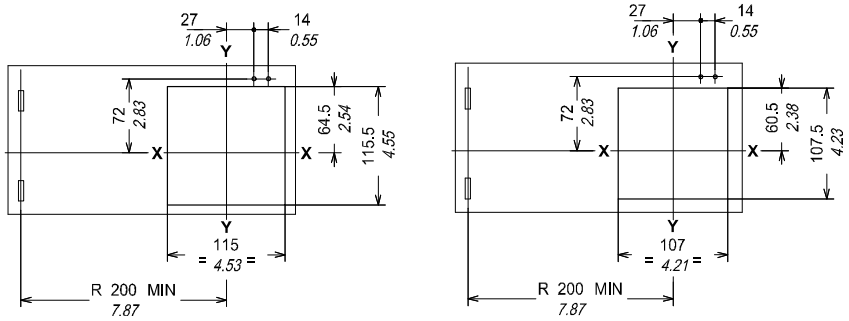


## Flange for the compartment door

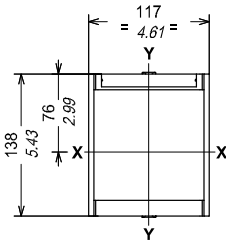

# Tmax molded case circuit breakers
# Overall dimensions

## ACCESSORIES T4-T5
### Front lever operating mechanism

### T4

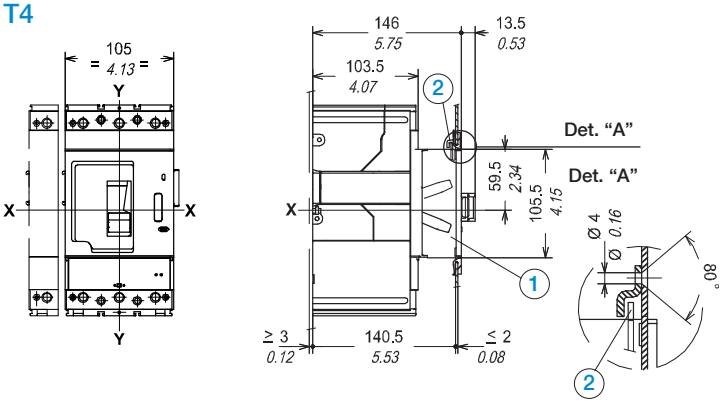


### Caption

1. Front lever operating mech.
2. Lock for compartment door (supplied on request)

### T5

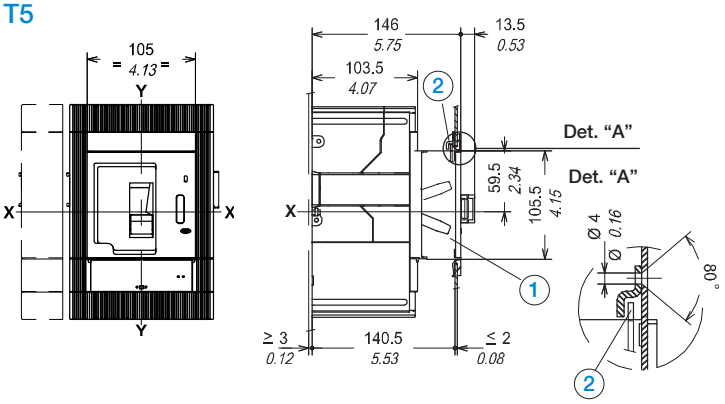


### Caption

1. Front lever operating mech.
2. Lock for compartment door (supplied on request)

# Tmax molded case circuit breakers
# Overall dimensions

## DRILLING TEMPLATES
### Support sheet

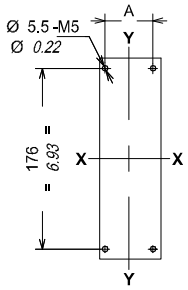


3 POLES

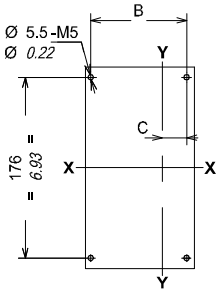


4 POLES

| Dimensions | A | B | C |
|---|---|---|---|
| T4 mm | 35 | 70 | 17.5 |
| T4 in | 1.38 | 2.76 | 0.69 |
| T5 mm | 46.5 | 93 | 23.25 |
| T5 in | 1.83 | 3.66 | 0.92 |

## DRILLING TEMPLATES
### Compartment door

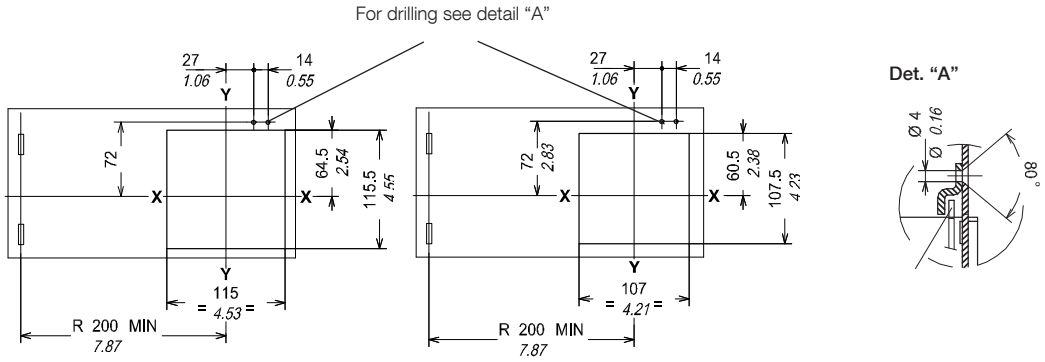


With flange

Without flange

## Flange for the compartment door

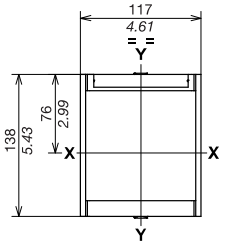

# Tmax molded case circuit breakers
# Overall dimensions

## ACCESSORIES T4-T5
### Mechanical interlock between 2 horizontal circuit breakers (fixed version)

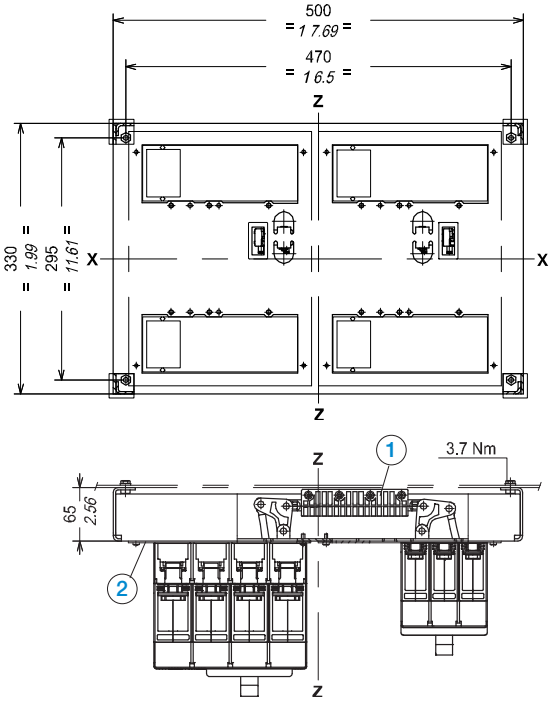


### Caption

1. Interlocking mechanism
2. Coupling plate

## DRILLING TEMPLATES
### Support sheet

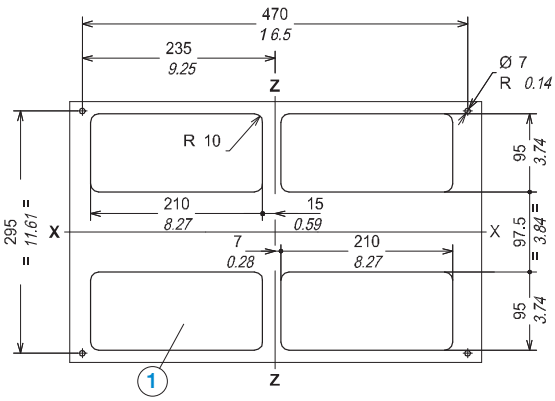


### Caption

1. Drilling template for all versions with rear terminals

# Tmax molded case circuit breakers
## Overall dimensions

### ACCESSORIES T4-T5
#### Mechanical interlock possibilities between 2 horizontal circuit breakers (fixed version)

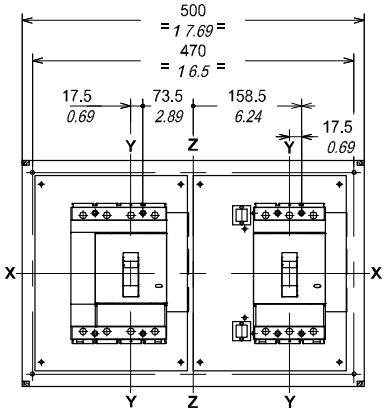


A

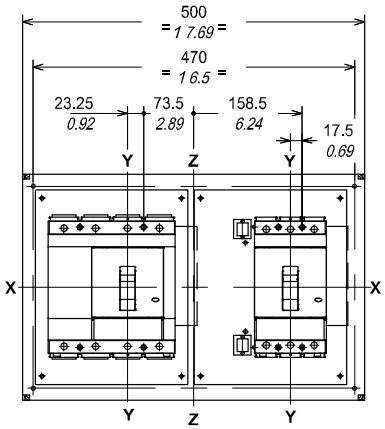


B

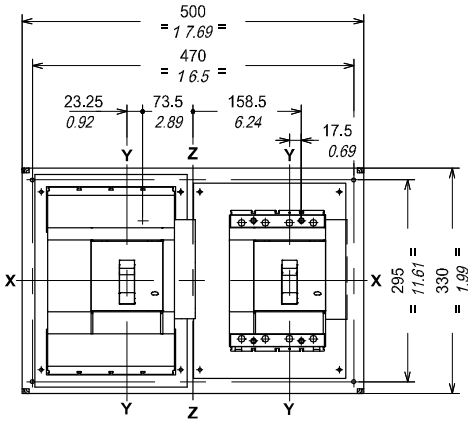


C

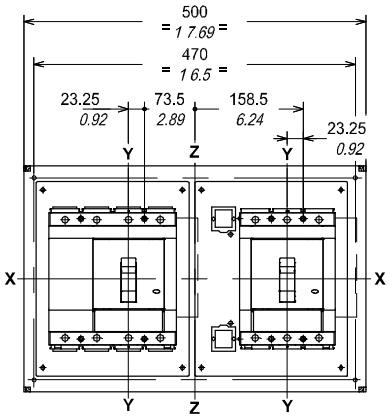


D

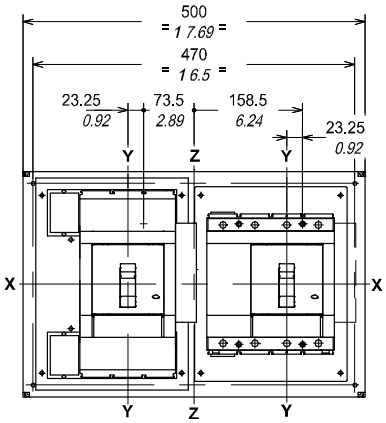


E

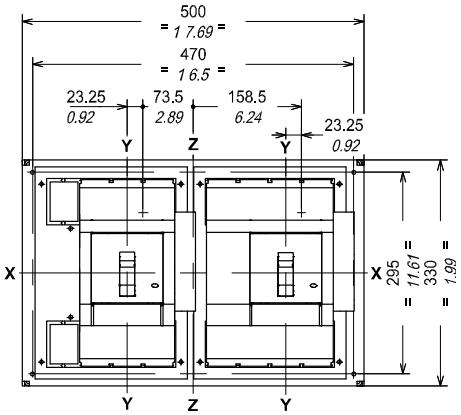


F

| Type | Circuit breakers combination |
|---|---|
| A | N° 1 T4 (F-P-W) |
| | N° 2 T4 (F-P-W) |
| B | N° 1 T4 (F-P-W) |
| | N° 2 T5 400 (F-P-W) or T5 600* (F) |
| C | N° 1 T4 (F-P-W) |
| | N° 2 T5 600* (P-W) |
| D | N° 1 T5 400 (F-P-W) or T5 600* (F) |
| | N° 2 T5 400 (F-P-W) or T5 600* (F) |
| E | N° 1 T5 400 (F-P-W) or T5 600* (F) |
| | N° 2 T5 600* (P-W) |
| F | N° 1 T5 600* (P-W) |
| | N° 2 T5 600* (P-W) |

**Note:**
(F) Fixed circuit breaker
(P) Plug-in circuit breaker
(W) Draw out circuit breaker
* Please ask ABB for 600 A availability

# Tmax molded case circuit breakers
# Overall dimensions

## ACCESSORIES T4-T5
### Motor operator (fixed version)

#### T4

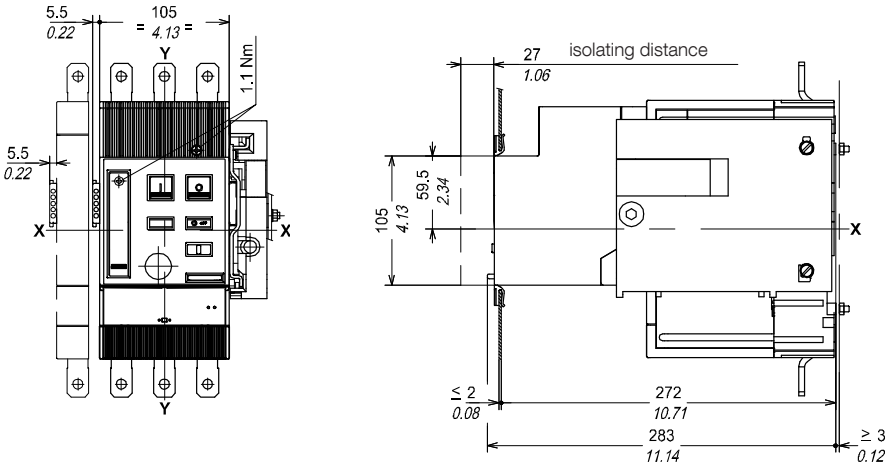


#### T5 (400A)

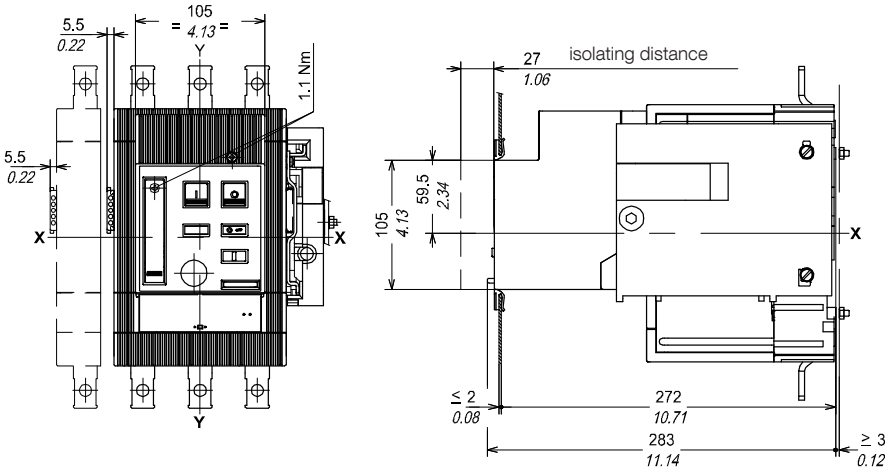


## DRILLING TEMPLATES
### Compartment door

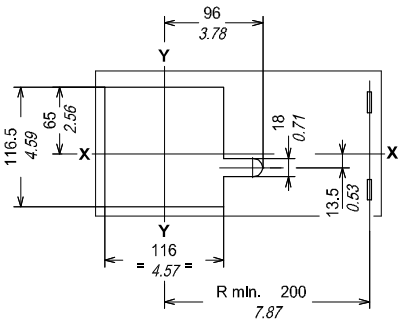


## Flange for the compartment door

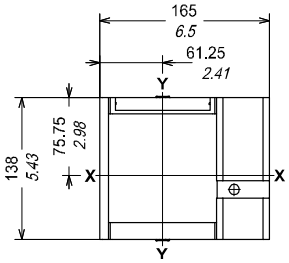

# Tmax molded case circuit breakers
## Overall dimensions

### ACCESSORIES T4-T5
#### Protection kit IP42 (fixed version)

T4

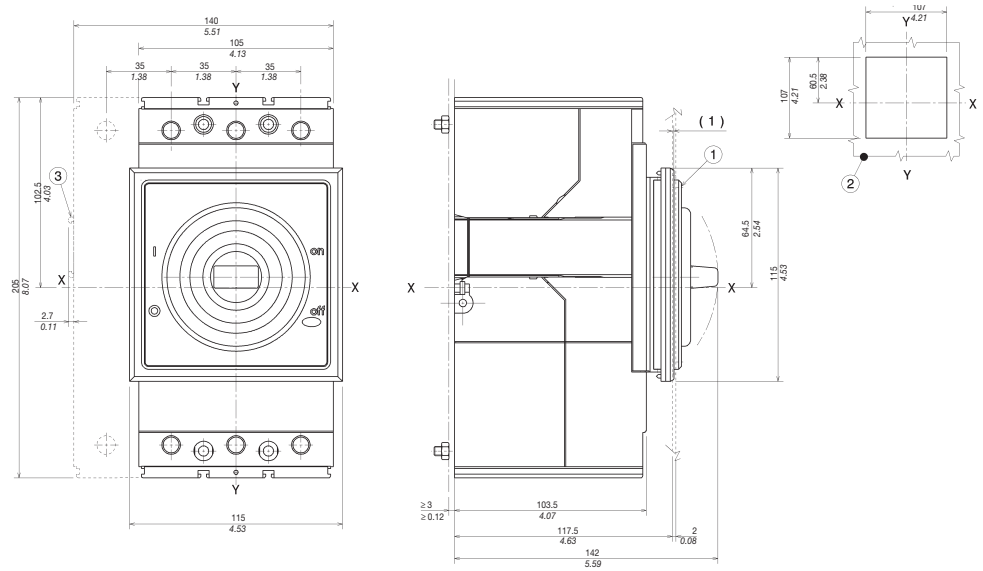


### Caption

1. IP42 protection
2. Compartment door sheet steel drilling
3. Spacing when equipped with SOR-C, UVR-C

T5

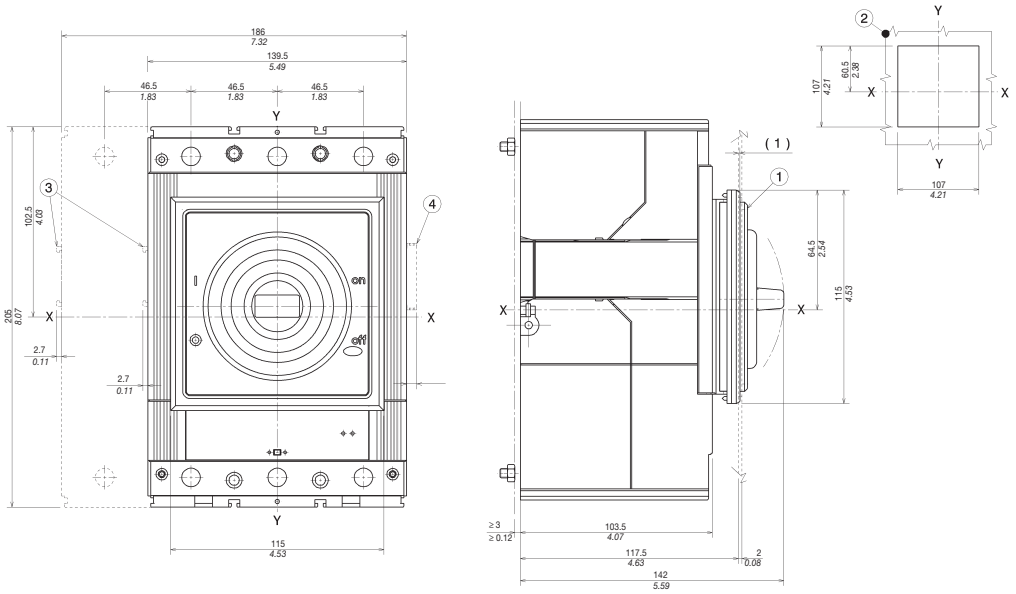


### Caption

1. IP42 protection
2. Compartment door sheet steel drilling
3. Spacing when equipped with SOR-C, UVR-C
4. Spacing when equipped with AUX-C (3Q+1SY only)

# Tmax molded case circuit breakers
# Overall dimensions

## ACCESSORIES T6
### Motor operator (fixed version)

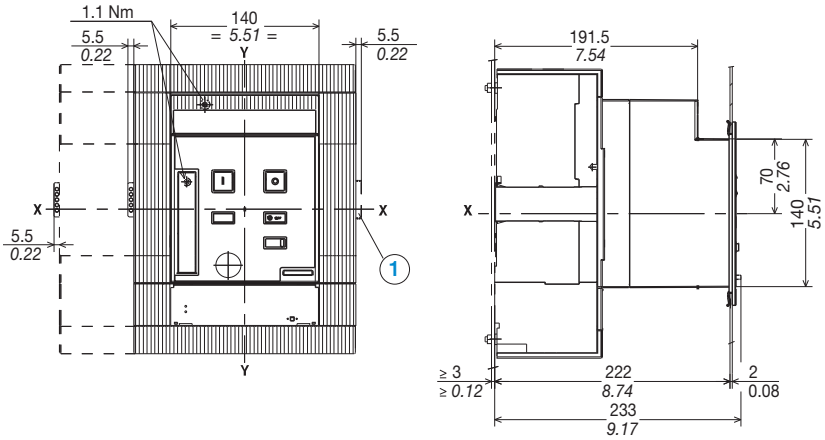


### Caption

(1) Overall dimensions with cabled auxiliary contacts mounted (3Q+1SY only)

## DRILLING TEMPLATES
### Support sheet

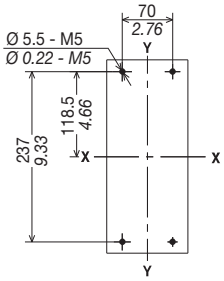


3 POLES

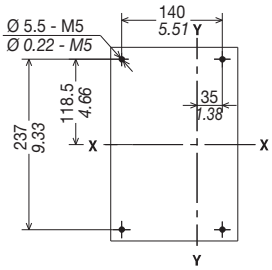


4 POLES

## DRILLING TEMPLATES
### Compartment door

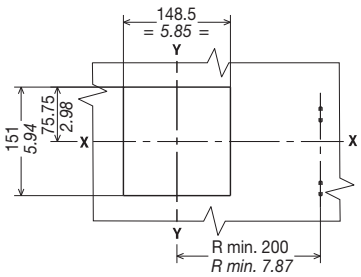


With flange

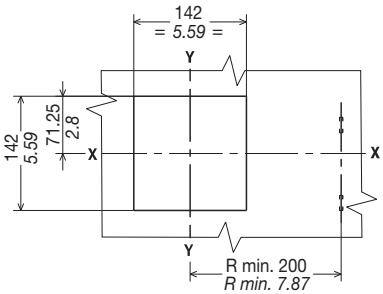


Without flange

## Flange for the compartment door

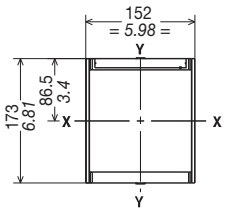

# Tmax molded case circuit breakers
# Overall dimensions

## ACCESSORIES T6
### Motor operator (Draw out version)

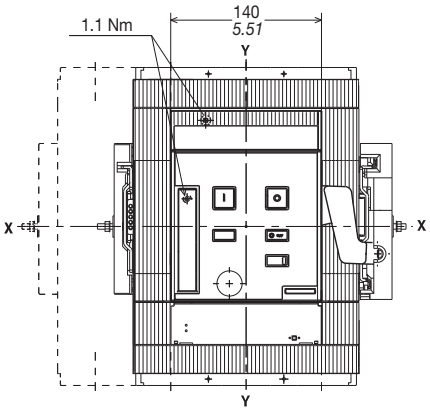


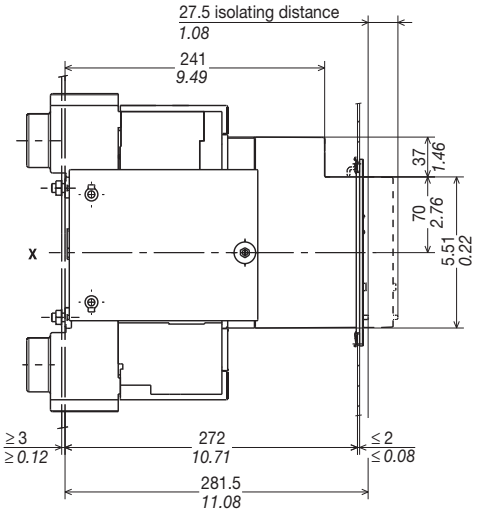


## DRILLING TEMPLATES
### Compartment door

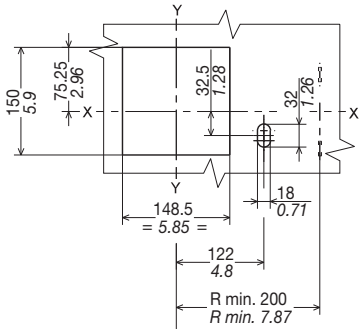


## Flange for the compartment door

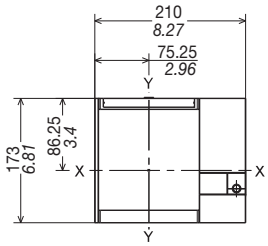

# Tmax molded case circuit breakers
# Overall dimensions

## ACCESSORIES T6

### Rotary handle on compartment door (fixed version with mechanism + shaft + handle)

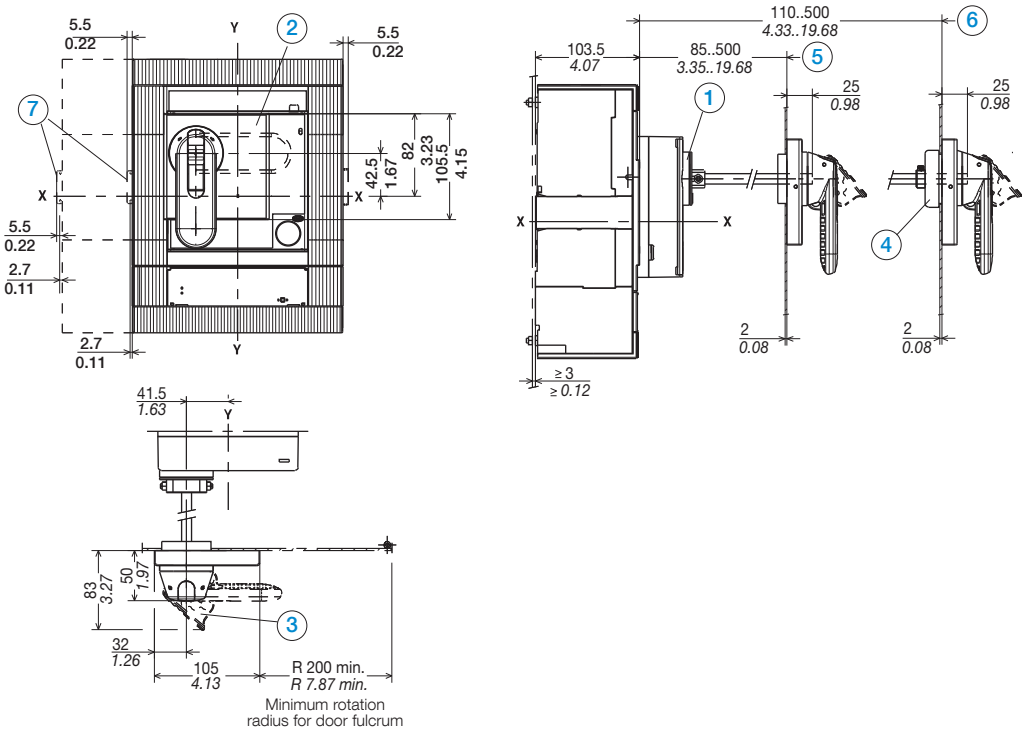


### Caption

1. Mechanism
2. Rotary handle with door lock
3. Padlock device open position (max. of 3 padlocks)
4. IP54 protection (supplied on request)
5. Min...Max distance from the front of the door without 4
6. Min...Max distance from the front of the door with 4
7. Dimension with AUE connector (early make contact)

## DRILLING TEMPLATES

### Compartment door

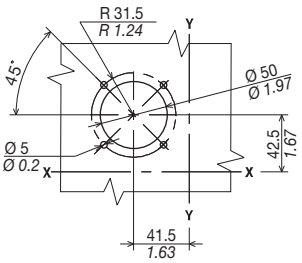

# Tmax molded case circuit breakers
# Overall dimensions

## ACCESSORIES T6
### Rotary handle on breaker (fixed version)

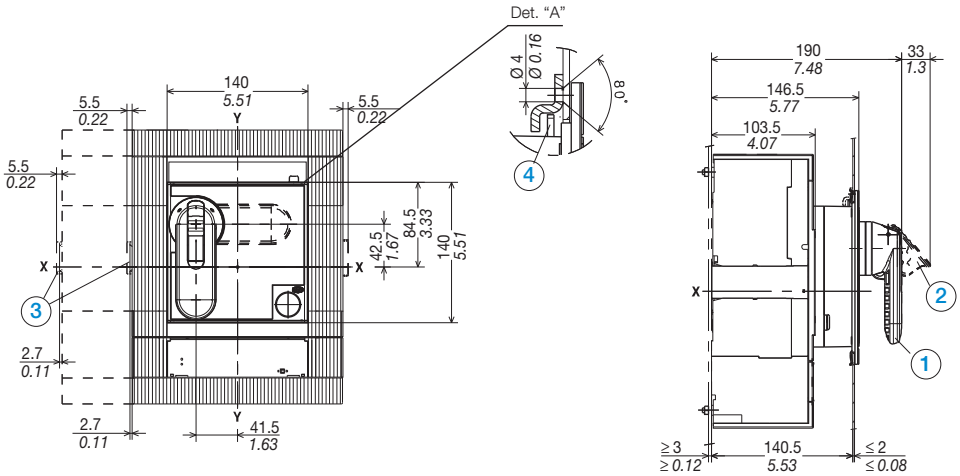


### Caption

1. Rotary handle on breaker
2. Padlock device open position (3 padlock max)
3. Dimension with AUE connector (early make contact)
4. Compartment door lock

## DRILLING TEMPLATES
### Compartment door

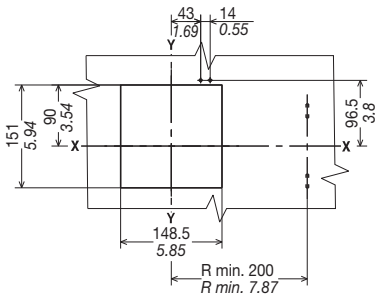


With flange

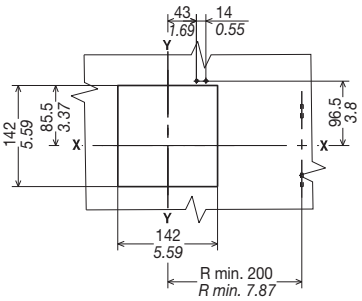


Without flange

## Flange for the compartment door

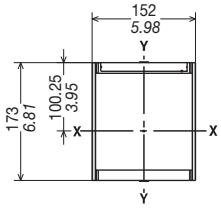

# Tmax molded case circuit breakers
# Overall dimensions

## ACCESSORIES T6
### Rotary handle on breaker (draw out version)

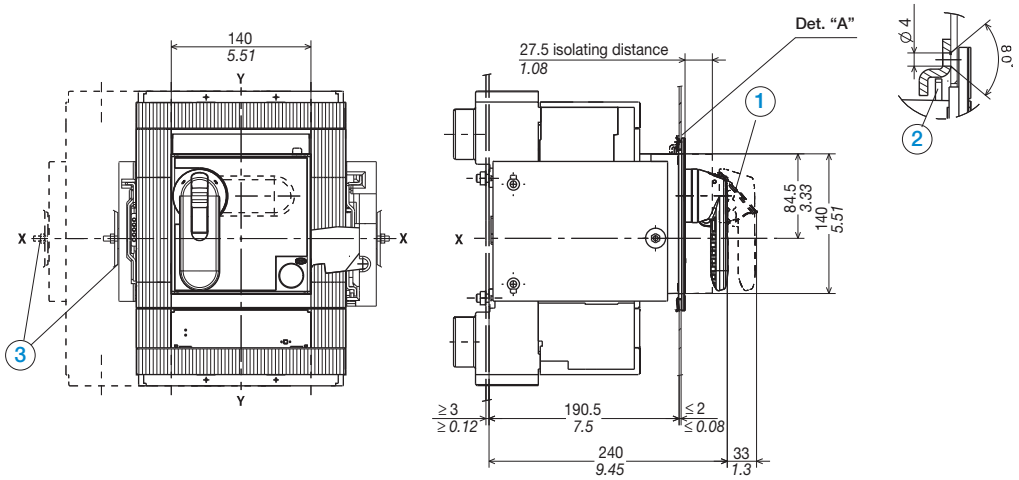


### Caption

1. Padlock device for open position (max. 3 padlocks)
2. Compartment door lock
3. Dimensions with AUE connector (early make contact)

## DRILLING TEMPLATES
### Compartment door

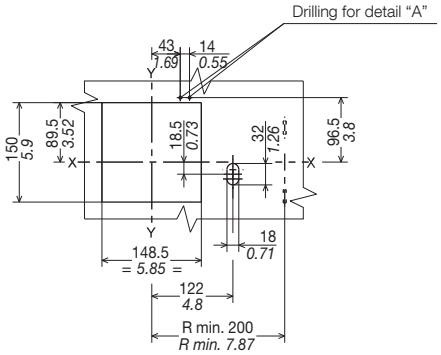


## Flange for the compartment door

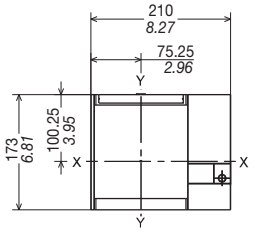

# Tmax molded case circuit breakers
# Overall dimensions

## ACCESSORIES T6
### Front for lever operating mechanism (Fixed)

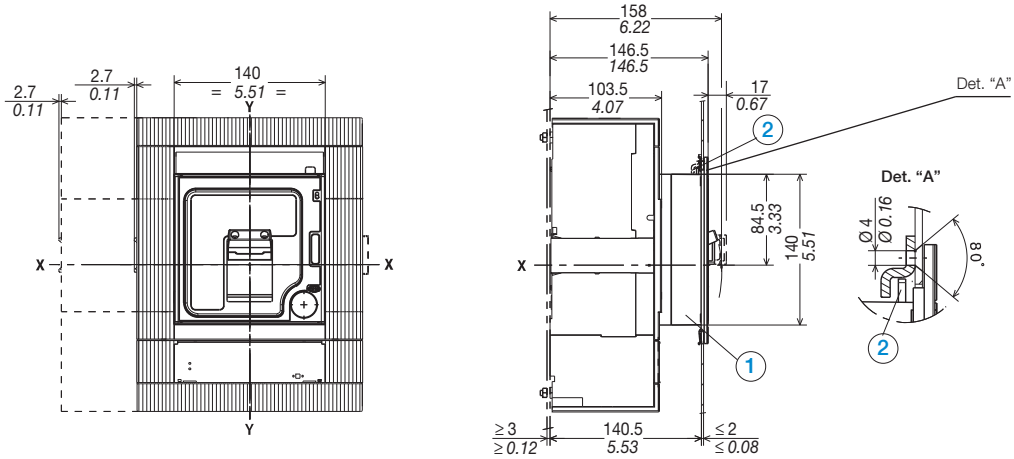


### Caption

1. Front for lever operating mech.
2. Compartment door lock

## DRILLING TEMPLATES
### Support sheet

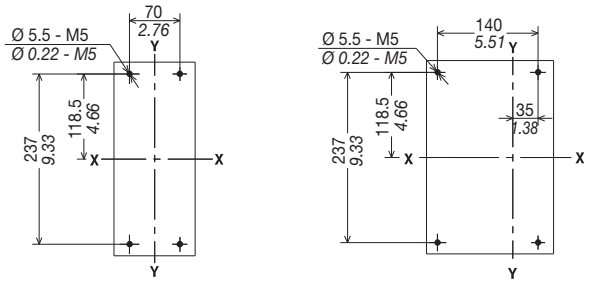


3 POLES 4 POLES

## DRILLING TEMPLATES
### Compartment door

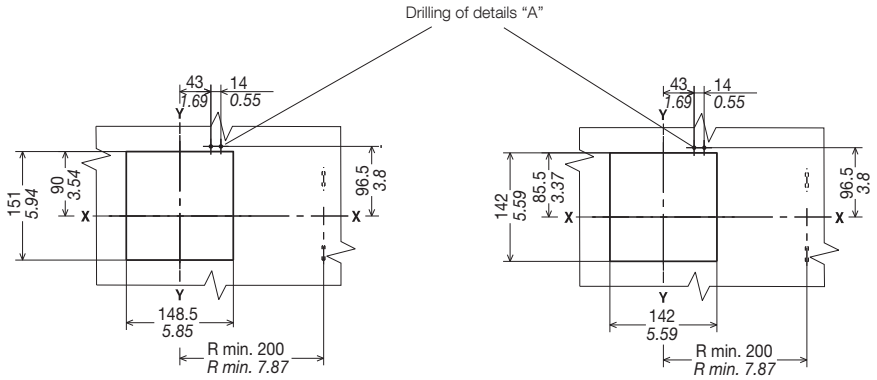


## Flange for the compartment door

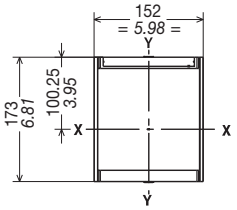

# Tmax molded case circuit breakers
# Overall dimensions

## ACCESSORIES T6
### Mechanical interlock between 2 horizontal circuit breakers

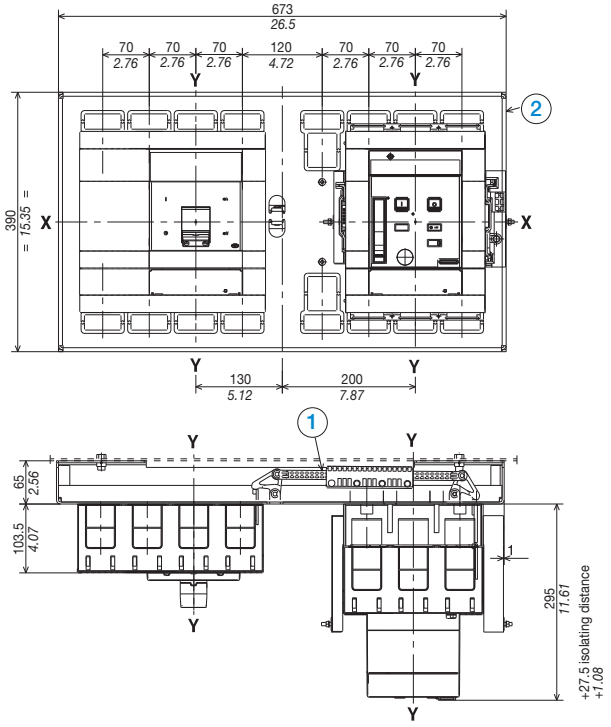


### Caption

1. Interlocking mechanism
2. Coupling plate

## DRILLING TEMPLATES
### Support sheet

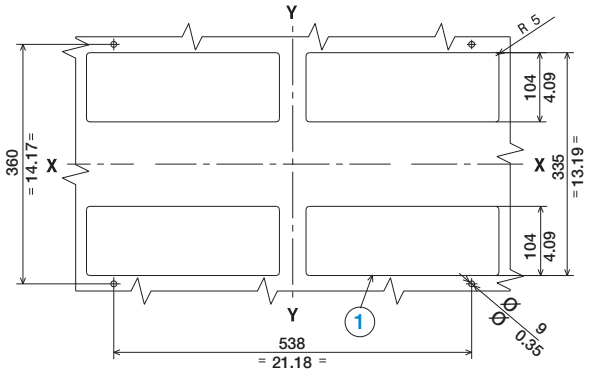


### Caption

1. Drilling template for all versions with rear terminals

# Tmax molded case circuit breakers
## Overall dimensions

### ACCESSORIES T7
**Rotary handle on compartment door (fixed version with mechanism + shaft + handle)**

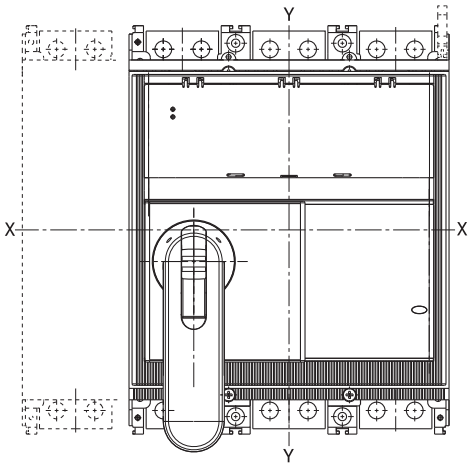


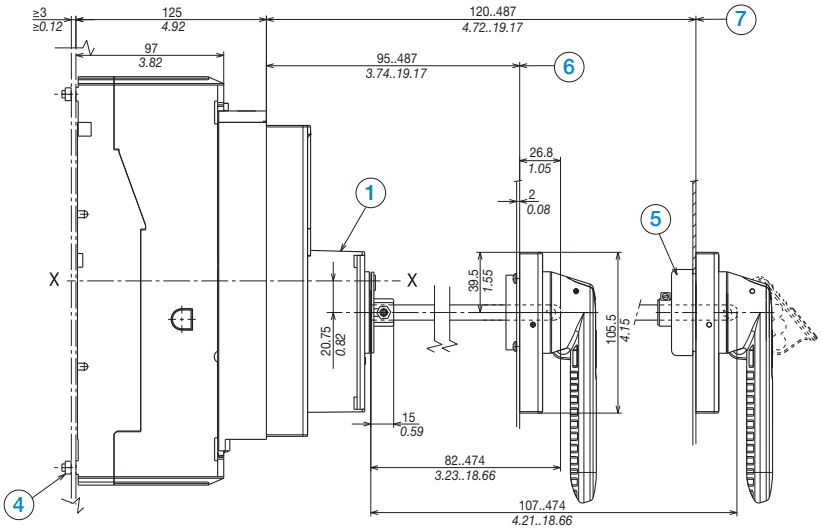


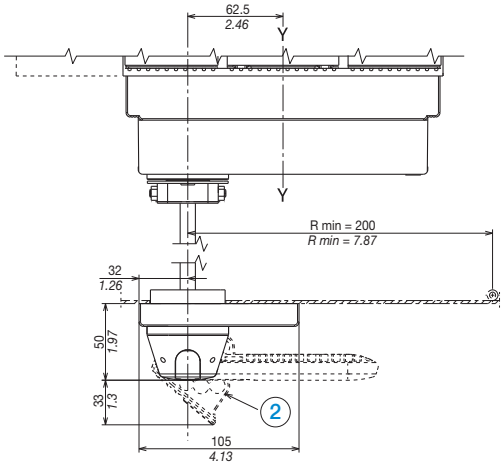


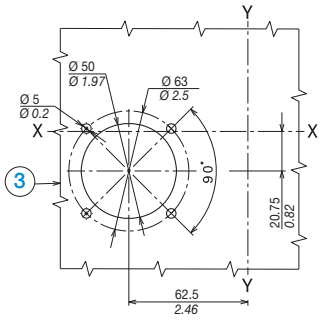


### Caption

1. Mechanism
2. Padlock device in open position (max of 3 padlocks 7mm)
3. Drilling template for compartment door
4. Tightening torque 2.5 Nm
5. Accessory for IP54 protection degree (available on request)
6. Min...Max distance from the front of the door without 5
7. Min...Max distance from the front of the door with 5

# Tmax molded case circuit breakers
# Overall dimensions

## ACCESSORIES T7
### Rotary handle on breaker (fixed version)

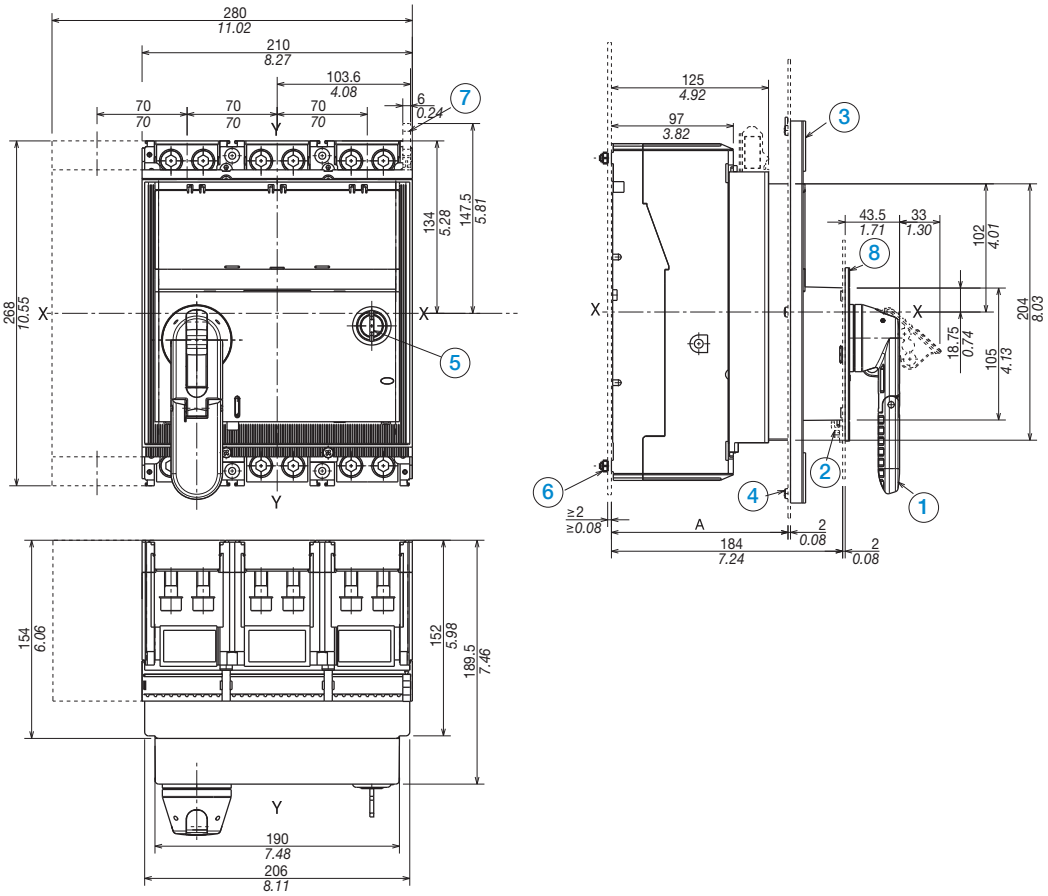


## Caption

1. Rotary handle on breaker
2. Compartment door interlock
3. Flange for the compartment door
4. Flange fixing screws
5. Key lock (optional)
6. Tightening torque 2.5 Nm
7. Terminal for auxiliary contacts
8. Reduced flange of the rotary handle for the compartment door

| Dimensions | With flange | Without flange |
|---|---|---|
| A mm | 125...141 | 147 |
| A in | 4.92...5.55 | 5.79 |

# Tmax molded case circuit breakers
# Overall dimensions

## DRILLING TEMPLATES
### Support sheet

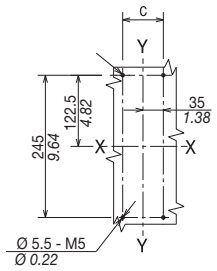


| Dimensions | 3 Pole | 4 Pole |
|---|---|---|
| C mm | 70 | 140 |
| C in | 2.76 | 5.51 |

## DRILLING TEMPLATES
### Compartment door

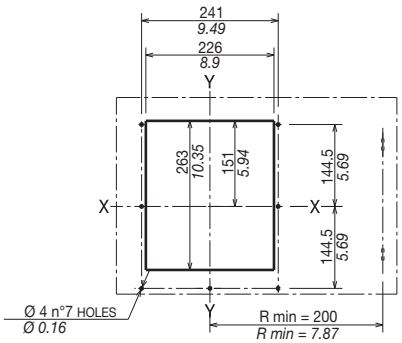


With standard flange

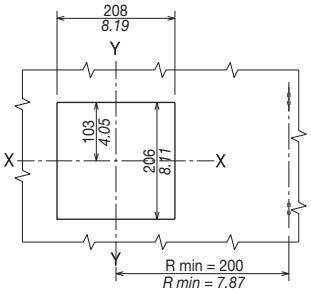


Without standard flange

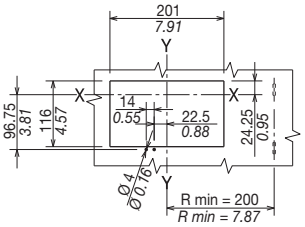


Drilling for rotary handle

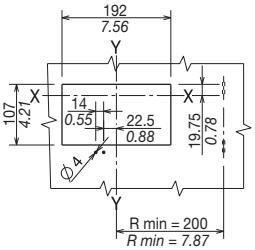


Drilling for rotary handle without handle flange

## Flange for the compartment door

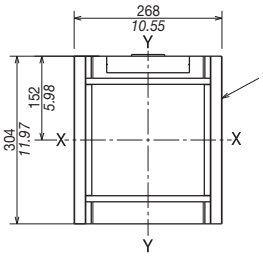


Standard flange

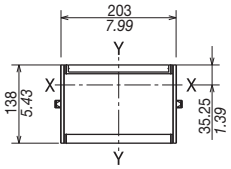


Reduced flange

# Tmax molded case circuit breakers
## Overall dimensions

### ACCESSORIES T7
#### Rotary handle on breaker (draw out version)

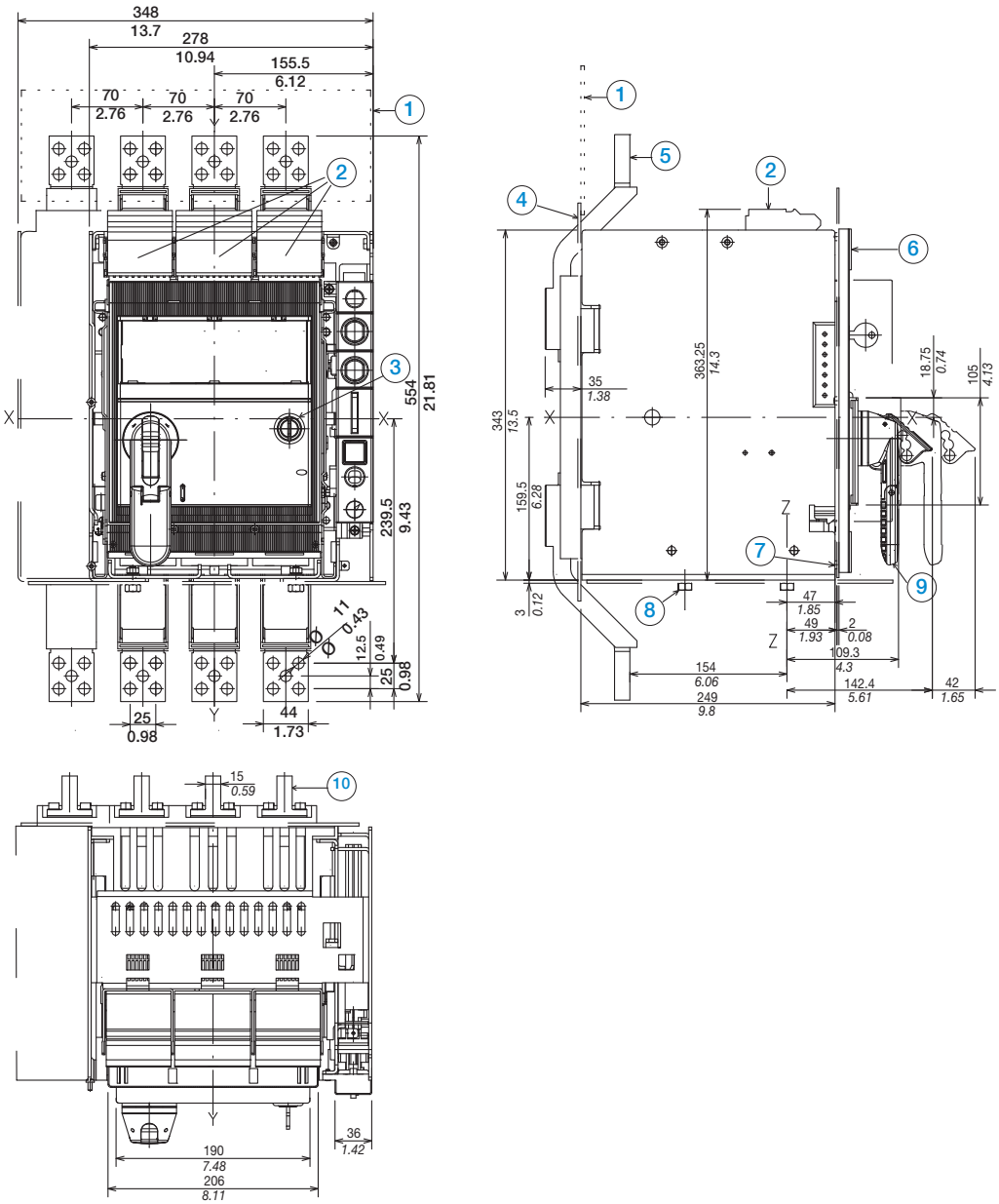


### Caption

1. Insulating protection
2. Auxiliary contact terminal
3. Key lock (optional)
4. Rear segregation for front terminals
5. Front terminals
6. Flange for compartment door
7. Flange fixing screws (tightening torque 1.5 Nm)
8. Tightening torque 9 Nm
9. Rotary handle on breaker
10. Rear vertical terminals

# Tmax molded case circuit breakers
# Overall dimensions

## DRILLING TEMPLATES
### Support sheet

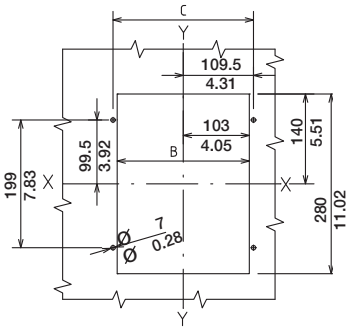


Rear segregation for rear terminals

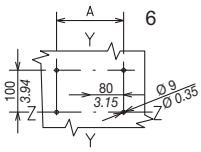


Support sheet

| Dimensions | 3 Pole | 4 Pole |
|---|---|---|
| A mm | 160 | 230 |
| A in | 6.3 | 9.05 |
| B mm | 206 | 276 |
| B in | 8.11 | 10.87 |
| C mm | 219 | 289 |
| C in | 8.62 | 11.38 |

## DRILLING TEMPLATES
### Compartment door

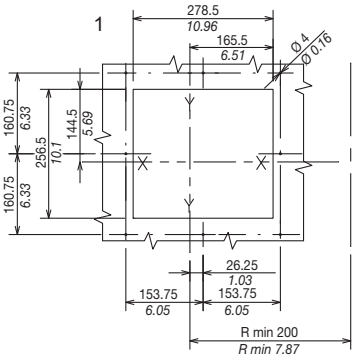


## Flange for the compartment door

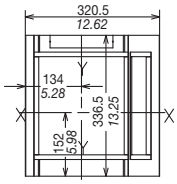

# Tmax molded case circuit breakers
## Overall dimensions

### ACCESSORIES T7M
#### Mechanical interlock (fixed version)

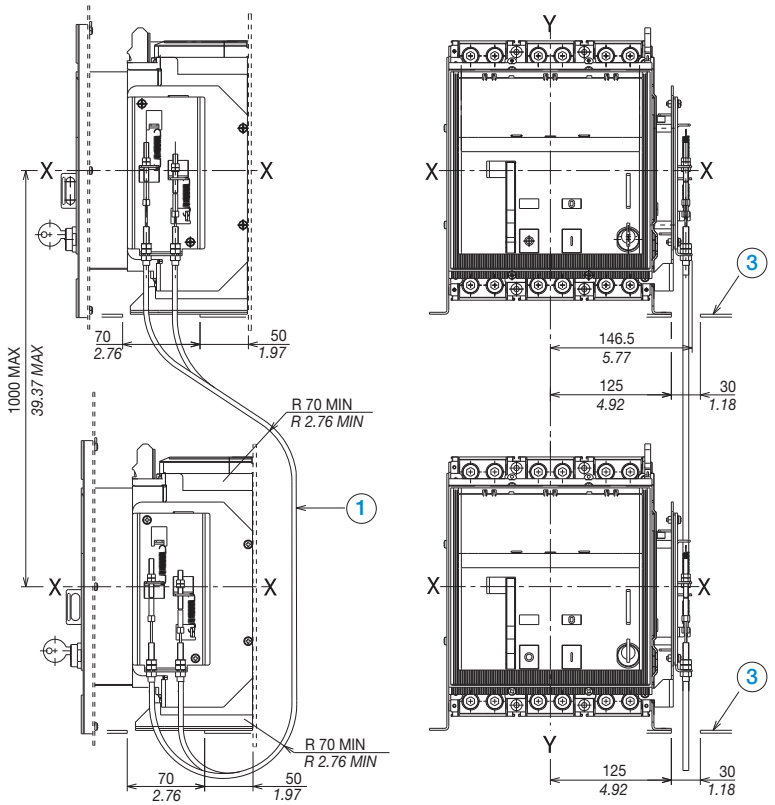


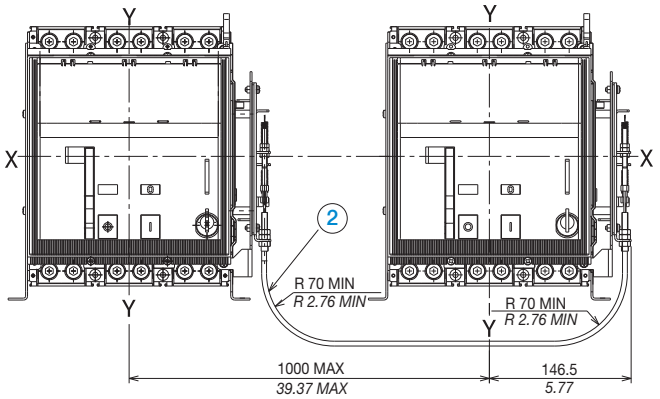


### Caption

1. Mechanical vertical interlock for fixed breakers
2. Mechanical horizontal interlock for fixed circuit breakers
3. Sheet drilling for wire passage of the mechanical interlock

# Tmax molded case circuit breakers
## Overall dimensions

### ACCESSORIES T7M
#### Mechanical interlock (draw out version)

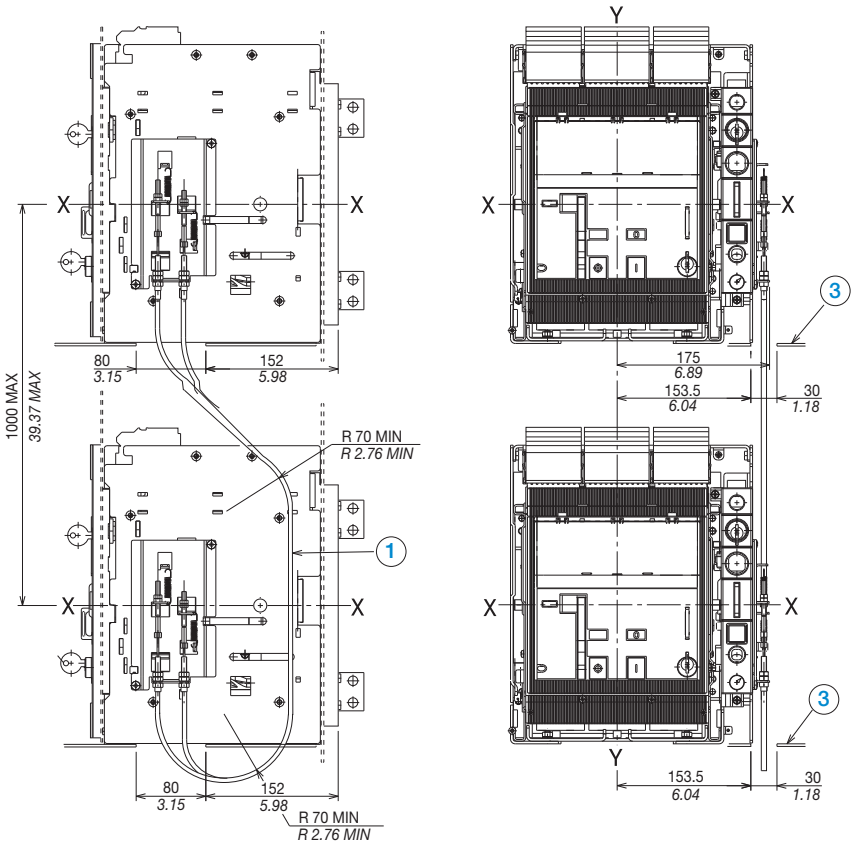


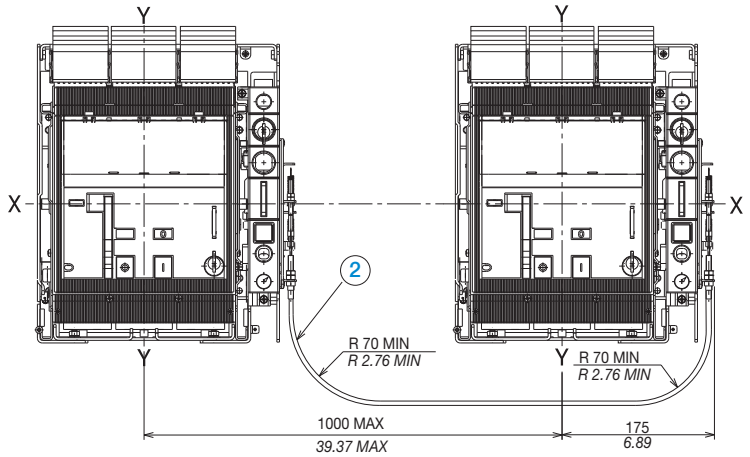


### Caption

1. Mechanical vertical interlock for draw out breakers
2. Mechanical horizontal interlock for draw out circuit breakers
3. Sheet drilling for wire passage of the mechanical interlock

# Tmax molded case circuit breakers
# Overall dimensions

## Distances to be respected
### Insulation distances for installation in metallic cubicle

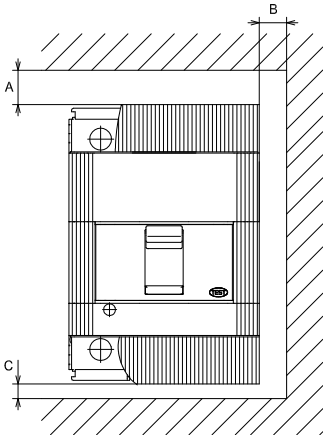


| Breaker type | A [mm - in] | B [mm - in] | C [mm - in] |
|---|---|---|---|
| T1 | 25 - 0.98 | 20 - 0.79 | 25 - 0.98 |
| T2 | 25 - 0.98 | 20 - 0.79 | 20 - 0.79 |
| T3 | 50 - 1.97 | 25 - 0.98 | 25 - 0.98 |
| Ts3 | 35 - 1.38 | 25 - 0.98 | 20 - 0.79 |
| T4 | 30(*) - 1.18 | 25 - 0.98 | 25(*) - 0.98 |
| T5 | 30(*) - 1.18 | 25 - 0.98 | 25(*) - 0.98 |
| T6 | 35(*) - 1.38 | 25 - 0.98 | 20 - 0.79 |
| T7 | 50(*) - 1.97 | 20 - 0.79 | 10 - 0.39 |
| T8 | 200(**) - 7.87 | 30 - 1.18 | 120 - 4.72 |

(*) For Ub ≥ 480 V and T6L all versions: distances A = 100 mm (3.94 in)
(*) For Un ≥ 480 V and ≤ 600 V: A = 60mm (2.36 in), C = 45 mm (1.77 in) and ≤ 600 V
(**) For Ub ≥ 440 V distance A = 100 mm (3.94 in)

### Minimum centre distance between 2 circuit breakers side by side

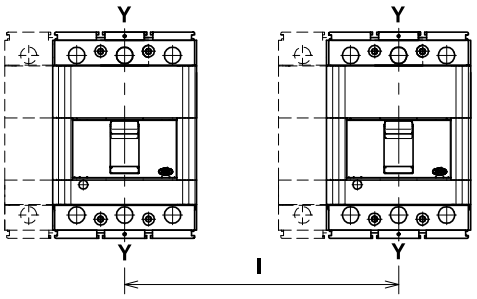


| Breaker type | Circuit breaker width [mm - in] | | Centre distance I [mm - in] | |
|---|---|---|---|---|
| | 3 poles | 4 poles | 3 poles | 4 poles |
| T1 | 76 - 2.99 | 102 - 4.02 | 76 - 2.99 | 102 - 4.02 |
| T2 | 90 - 3.54 | 120 - 4.72 | 90 - 3.54 | 120 - 4.72 |
| T3 | 105 - 4.13 | 140 - 5.51 | 105 - 4.13 | 140 - 5.51 |
| Ts3 | 105 - 4.13 | 140 - 5.51 | 105 - 4.13 | 140 - 5.51 |
| T4 | 105 - 4.13 | 140 - 5.51 | 105(*) - 4.13 | 140(*) - 5.51 |
| T5 | 140 - 5.51 | 184 - 7.24 | 140(*) - 5.51 | 184(*) - 7.24 |
| T6 | 210 - 8.27 | 280 - 11.02 | 210 - 8.27 | 280 - 11.02 |
| T7 | 210 - 8.27 | 280 - 11.02 | 210 - 8.27 | 280 - 11.02 |
| T8 | 427 - 16.81 | 553 - 21.77 | 456 - 17.95 | 582 - 22.91 |

(*) For Ub: ≥ 480 V and ≤ 600 V minimum centre I (mm) 3 poles 180, minimum centre I (mm) 4 poles 224

### Minimum centre distance between 2 circuit breakers superimposed

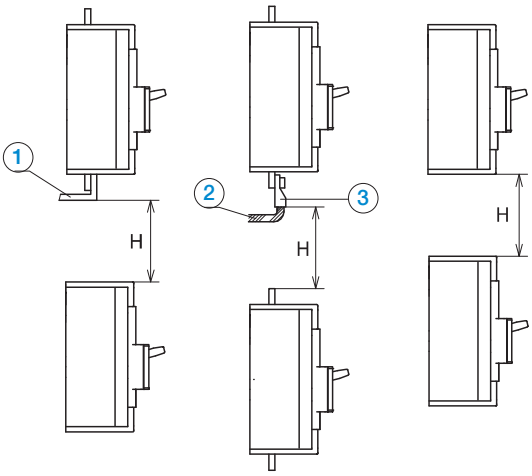


| Breaker type | H [mm - in] |
|---|---|
| T1 | 60 - 2.36 |
| T2 | 90 - 3.54 |
| T3 | 140 - 5.51 |
| Ts3 | 140 - 5.51 |
| T4 | 160 - 6.30 |
| T5 | 160 - 6.30 |
| T6 | 180 - 7.09 |
| T7 | 180 - 7.09 |
| T8 | 300 - 11.81 |

### Caption

1. Connection - not insulated
2. Insulated cable
3. Cable terminal

**Note**: **For assembly side by side or superimposed, check that the connection busbars or cables do not reduce the air insulation distance**. The dimensions shown apply for operating voltage Ub up to 690V. The dimensions to be respected must be added to the maximum dimensions of the various different versions of the circuit breakers, including terminals.

# Table of contents
## Part numbers

# Tmax molded case circuit breakers
## General information

### Abbreviations used to describe the apparatus

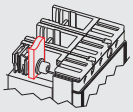

**F** = Front terminals

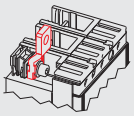

**EF** = Front extended terminals

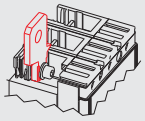

**ES** = Front extended spread terminals

**FC Cu** = Front terminals for copper cables

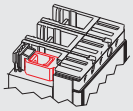

**FC CuAl** = Front terminals for Cu/Al cables

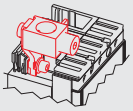

**FC CuAl** = Front terminals for Cu/Al cables (housed externally)

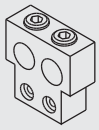

**RC CuAl** = Rear terminals for Cu/Al cables

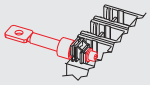

**R** = Rear terminals

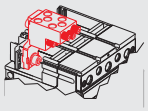

**MC** = Multi-cable terminals

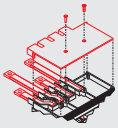

**HR for RC221/222** = Rear flat horizontal terminals

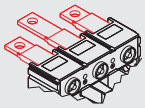

**HR** = Rear flat horizontal terminals

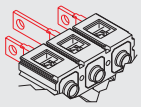

**VR** = Rear flat vertical terminals

**HR/VR** = Rear flat terminals

$I_3$ — Magnetic trip current [A]

In — Rated current of the thermomagnetic trip unit [A]

**Iu** — Rated uninterrupted current of the circuit breaker [A]

**Icu** — Rated ultimate short-circuit breaking capacity [A]

**Icw** — Rated short-time withstand current for 1s

**N= 50%**
**N= 100%** — Protection of the neutral at 50% or at 100% of that of the phases [A]

**TMF** = Thermomagnetic trip unit with fixed thermal and magnetic threshold

**TMD** = Thermomagnetic trip unit with adjustable thermal and fixed magnetic threshold

**TMA** = Thermomagnetic trip unit with adjustable thermal and magnetic threshold

**TMG** = Thermomagnetic trip unit for generator protection

**MF** = Fixed magnetic only trip units

**MA** = Adjustable magnetic only trip units

**PR22_** = Electronic trip units

**PR23_** = Electronic trip units

**PR33_** = Electronic trip units

# Tmax molded case circuit breakers
## Part numbering for T7 / T7M

T7 ___ ___ ___ ___ ___ ___ ___ ___ ___ ___ ___ ___ ___

**Locking Provisions:**
**X** = None, **A** = Keylock,
**B** = Button guard,
**C** = Padlock Provision (open),
**D** = Withdrawable Position Lock (Connected, test and disconnected positions),
**E** = Withdrawable Position Lock (Test and disconnected positions)

**Accessories:**
**X** = None,
**A** = Mechanical counter

**Undervoltage:**
**0** = None, **A** = 24VAC/DC, **B** = 30VAC/DC,
**C** = 48VAC/DC, **D** = 60VAC/DC,
**E** = 110..120VAC/DC, **F** = 120..127VAC/DC,
**G** = 220..240VAC/DC, **H** = 240..250VAC/DC,
**J** = 380..400VAC, **K** = 415..440VAC

**Shunt Trip:**
**0** = None, **A** = 24VAC/DC, **B** = 30VAC/DC, **C** = 48VAC/DC,
**D** = 60VAC/DC, **E** = 110..120VAC/DC, **F** = 120..127VAC/DC,
**G** = 220..240VAC/DC, **H** = 240..250VAC/DC,
**J** = 380..400VAC, **K** = 415..440VAC

**Spring Charging Motor:**
**0** = None, **A** = 24..30VAC/DC, **B** = 48..60VAC/DC,
**C** = 100..130VAC/DC, **D** = 220..250VAC/DC,
**E** = 380..415VAC/DC

**Aux Contacts:**
**0** = None, **A** = 1 Form C + 1BA 400VAC (T7), **B** = 1 Form C + 1BA 24VDC (T7),
**C** = 2 Form C 400VAC (T7-T7M), **D** = 2 Form C 24VDC (T7-T7M), **E** = S51 250VAC (T7),
**F** = S51 250VAC (T7M), **G** = A+C (T7), **H** = B+D (T7), **I** = C+E (T7), **J** = C+F (T7M),
**K** = D+E (T7), **L** = D+F (T7M), **M** = C+C (T7M), **N** = D+D (T7M)

**Closing Coil:**
**0** = None, **A** = 24VAC/DC, **B** = 30VAC/DC, **C** = 48VAC/DC,
**D** = 60VAC/DC, **E** = 110..120VAC/DC, **F** = 120..127VAC/DC,
**G** = 220..240VAC/DC, **H** = 240..250VAC/DC,
**J** = 380..400VAC, **K** = 415..440VAC

**Trip Unit Accessories:**
**0** = None, **A** = PR330V, **B** = PR330/D-M, **C** = A + B

**Trip Unit:**
**X** = Non-Automatic (MCS), **B** = PR231/P-LS/I, **C** = PR232/P-LSI, **E** = PR331/P-LSIG,
**P** = PR332/P-LI, **R** = PR332/P-LSI, **S** = PR332/P-LSIG

**Rating Plug:**
**0** = Switch (MCS), **A** = 400, **B** = 600, **C** = 800, **D** = 1000A, **E** = 1200

**Frame Amp Rating:**
**1** = 1000A (toggle) **2** = 1200A (toggle) **P** =1000A (motorized) **B** =1200A (motorized)
**C** = 1000A (toggle) 4p **D** = 1200A (toggle) 4p **E** = 1000A (motorized) 4p **F** = 1000A (motorized) 4p

**Version:**
**B** = Fixed , **Q** = Fixed 100% Rated, **0** = Fixed Switch
**W** = Draw-Out (1), **X** = Draw-out 100% Rated (1), **Y** = Draw-out Switch (1)

**Breaking capacity 600V:**
**S** = 25kA, **H** = 50kA, **L** = 65kA

**(1)** Fixed part and accessories to be ordered seperately, please consult you local ABB office

# Tmax molded case circuit breakers
## Part numbering for T8

T8V _____ _____ _____ _____ _____ _____ _____ _____ _____ _____ _____ _____

**Locking provisions:**
**X**= None,
**A** = Keylock, **B** = Button guard,
**C** =Padlock, **D** = A+B, **E** = A+C

**Accessories:**
**X** = None,
**A** = Mech. counter, **B** = Bell alarm,
**C** = BA with remote reset 24-30VAC/DC
**D** = BA with remote reset 110-130VAC/DC
**E** = BA with remote reset 220-240VAC/DC,
**F** = A+B, **G** = A+C, **H** = A+D, **J** = A+E

**Undervoltage (second shunt trip):**
**0** = None,
**A (L)**= 24VDC, **B (M)**= 30VAC/DC, **C (N)** = 48VAC/DC, **D (P)** = 60VAC/DC,
**E (Q)** = 110-120VAC/DC, **F (R)** = 120-127VAC/DC, **G (S)** = 220-240AC/DC,
**H (T)** = 240-250VAC/DC, **J (U)** = 380-400VAC, **K (V)** = 440VAC

**Shunt trip:**
**0** = None,
**A** = 24VDC, **B** = 30VAC/DC,
**C** = 48VAC/DC, **D** = 60VAC/DC,
**E** = 110-120VAC/DC, **F** = 120-127VAC/DC,
**G** = 220-240AC/DC, **H** = 240-250VAC/DC,
**J** = 380-400VAC, **K** = 440VAC

**Auxiliary contacts:**
**0** = None [1], **A** = 4 aux. contacts, **B** = 4 aux. contacts 24V,
**C** = UVR de-energized NO, **D** = UVR de-energized NC,
**E** = A+C, **F** = A+D, **G** = B+C, **H** = B+D
**H** = 240-250VAC/DC, **J** = 380-400VAC, **K** = 440VAC

**Spring charging motor:**
**0** = None, **A** = 24-30VAC/DC, **B** = 48-60VAC/DC, **C** = 100-130VAC/DC
**D** = 220-250VAC/DC

**Closing coil:**
**0** = None, **A** = 24VDC, **B** = 30VAC/DC, **C** = 48VAC/DC
**D** = 60VAC/DC, **E** = 110-120VAC/DC, **F** = 120-127VAC/DC, **G** = 220-240AC/DC
**H** = 240-250VAC/DC, **J** = 380-400VAC, **K** = 440VAC

**Trip unit accessories (PR332/P only):**
**0** = None, **B** = Voltage measuring module, **C** = Communication module

**Trip unit:**
**C** = PR331/P-LSI (T8), **D** = Switch, **E** = PR331/P-LSIG, **P** = PR332/P-LI
**R** = PR332/P-LSI, **S** = PR332/P-LSIG

**Rating plug:**
**0** = Switch, **D** = 1000A, **E** = 1200A, **F** = 1600A
**G** = 2000A, **H** = 2500A, **J** = 3000A

**Frame Amp Rating:**
**C** = 1600A (3p), **D** = 2000A (3p), **E** = 2500A (3p), **F** = 3000A (3p)
**G** = 1600A (4p), **H** = 2000A (4p), **I** = 2500A (4p), **J** = 3000A (4p)

**Version:**
**B** = Fixed, **Q** = Fixed 100% Rated, **0** = Fixed Switch

**Breaking Capacity 600V:**
**V** = 100kA

# Tmax molded case circuit breakers
## Power distribution circuit breakers

### Tmax T1 100 A - FIXED (F) 1pole - CSA C22.2 / UL listed (Discount DS-ST)
**Iu (40**°C) = 100 A - Front terminals for copper/aluminum cables (FC CuAl)

| Thermal-Magnetic trip unit with fixed tresholds - TMF - 347V AC | | | Part number |
|---|---|---|---|
| Type | In | $I_3$ | B (14kA) |
| TMF | 15 A (1) | 1000 A | T1B015TL-1 |
| TMF | 20 A | 1000 A | T1B020TL-1 |
| TMF | 25 A | 1000 A | T1B025TL-1 |
| TMF | 30 A | 1000 A | T1B030TL-1 |
| TMF | 40 A | 1000 A | T1B040TL-1 |
| TMF | 50 A | 1500 A | T1B050TL-1 |
| TMF | 60 A | 1500 A | T1B060TL-1 |
| TMF | 70 A | 1500 A | T1B070TL-1 |
| TMF | 80 A | 1500 A | T1B080TL-1 |
| TMF | 90 A | 1500 A | T1B090TL-1 |
| TMF | 100 A | 1500 A | T1B100TL-1 |

**(1) In 15A = 10 kA at 347V AC**

### Tmax T1 100 A - FIXED (F) 3 poles - CSA C22.2 / UL listed (Discount DS-ST)
**Iu (40**°C) = 100 A - Front terminals for copper/aluminum cables (FC CuAl)

| Thermal-Magnetic trip unit with fixed tresholds - TMF - 480V AC / 500V DC | | | Part number |
|---|---|---|---|
| Type | In | $I_3$ | N (22kA) |
| TMF | 15 A (1) | 1000 A | T1N015TL |
| TMF | 20 A | 1000 A | T1N020TL |
| TMF | 25 A | 1000 A | T1N025TL |
| TMF | 30 A | 1000 A | T1N030TL |
| TMF | 40 A | 1000 A | T1N040TL |
| TMF | 50 A | 1500 A | T1N050TL |
| TMF | 60 A | 1500 A | T1N060TL |
| TMF | 70 A | 1500 A | T1N070TL |
| TMF | 80 A | 1500 A | T1N080TL |
| TMF | 90 A | 1500 A | T1N090TL |
| TMF | 100 A | 1500 A | T1N100TL |

**(1) In 15A = 14 kA at 480Y/277V AC**

### Tmax T1 100 A - FIXED (F) 4 poles - CSA C22.2 / UL listed (Discount DS-ST)
**Iu (40**°C) = 100 A - Front terminals for copper/aluminum cables (FC CuAl)

| Thermal-Magnetic trip unit with fixed tresholds - TMF - 480V AC / 500V DC | | | Part number |
|---|---|---|---|
| Type | In | $I_3$ | N (22kA) |
| TMF | 15 A (1) | 1000 A | T1N015TL-4 |
| TMF | 20 A | 1000 A | T1N020TL-4 |
| TMF | 25 A | 1000 A | T1N025TL-4 |
| TMF | 30 A | 1000 A | T1N030TL-4 |
| TMF | 40 A | 1000 A | T1N040TL-4 |
| TMF | 50 A | 1500 A | T1N050TL-4 |
| TMF | 60 A | 1500 A | T1N060TL-4 |
| TMF | 70 A | 1500 A | T1N070TL-4 |
| TMF | 80 A | 1500 A | T1N080TL-4 |
| TMF | 90 A | 1500 A | T1N090TL-4 |
| TMF | 100 A | 1500 A | T1N100TL-4 |

**(1) In 15A = 14 kA at 480Y/277V AC**

# Tmax molded case circuit breakers
## Power distribution circuit breakers

### Tmax T1 100 A - FIXED (F) 3 poles - 100% rated - CSA C22.2 / UL listed (Discount DS-ST)

**Iu (40**°C) = 100 A - Front terminals for copper/aluminum cables (FC CuAl)

| Thermal-Magnetic trip unit with fixed tresholds - TMF - 480V AC / 500V DC | | | Part number |
|---|---|---|---|
| Type | In | $I_3$ | NQ (22kA) |
| TMF | 15 A (1) | 1000 A | T1NQ015TL |
| TMF | 20 A | 1000 A | T1NQ020TL |
| TMF | 25 A | 1000 A | T1NQ025TL |
| TMF | 30 A | 1000 A | T1NQ030TL |
| TMF | 40 A | 1000 A | T1NQ040TL |
| TMF | 50 A | 1500 A | T1NQ050TL |
| TMF | 60 A | 1500 A | T1NQ060TL |
| TMF | 70 A | 1500 A | T1NQ070TL |
| TMF | 80 A | 1500 A | T1NQ080TL |
| TMF | 90 A | 1500 A | T1NQ090TL |
| TMF | 100 A | 1500 A | T1NQ100TL |

**(1) In 15A = 14 kA at 480Y/277V AC**

# Tmax molded case circuit breakers
## Power distribution circuit breakers

### Tmax T2 100 A - FIXED (F) 3 poles - CSA C22.2 / UL listed (Discount DS-ST)
**Iu (40**°C) = 100 A - Front terminals (F)

| Thermal-Magnetic trip unit with fixed tresholds - TMF - 480V AC | | | Part number | |
|---|---|---|---|---|
| Type | In | $I_3$ | S (35kA) | H (65kA) |
| TMF | 15 A | 500 A | T2S015TL | T2H015TL |
| TMF | 20 A | 500 A | T2S020TL | T2H020TL |
| TMF | 25 A | 500 A | T2S025TL | T2H025TL |
| TMF | 30 A | 500 A | T2S030TL | T2H030TL |
| TMF | 40 A | 500 A | T2S040TL | T2H040TL |
| TMF | 50 A | 500 A | T2S050TL | T2H050TL |
| TMF | 60 A | 600 A | T2S060TL | T2H060TL |
| TMF | 70 A | 700 A | T2S070TL | T2H070TL |
| TMF | 80 A | 800 A | T2S080TL | T2H080TL |
| TMF | 90 A | 900 A | T2S090TL | T2H090TL |
| TMF | 100 A | 1000 A | T2S100TL | T2H100TL |

### Tmax T2 100 A - FIXED (F) 3 poles - CSA C22.2 / UL listed (Discount DS-ST)
**Iu (40**°C) = 100 A - Front terminals (F)

| Electronic trip unit (AC only) - 480V AC | | Part number | |
|---|---|---|---|
| Type | In | S (35kA) | H (65kA) |
| PR221DS-LS/I | 25 A (10...25 A) | T2S025BW | T2H025BW |
| PR221DS-LS/I | 60 A (24...60 A) | T2S060BW | T2H060BW |
| PR221DS-LS/I | 100 A (40...100 A) | T2S100BW | T2H100BW |

### Tmax T2 100 A - FIXED (F) 4 poles - CSA C22.2 / UL listed (Discount DS-ST)
**Iu (40**°C) = 100 A - Front terminals (F)

| Thermal-Magnetic trip unit with fixed tresholds - TMF - 480V AC | | | Part number | |
|---|---|---|---|---|
| Type | In | $I_3$ | S (35kA) | H (65kA) |
| TMF | 15 A | 500 A | T2S015TL-4 | T2H015TL-4 |
| TMF | 20 A | 500 A | T2S020TL-4 | T2H020TL-4 |
| TMF | 25 A | 500 A | T2S025TL-4 | T2H025TL-4 |
| TMF | 30 A | 500 A | T2S030TL-4 | T2H030TL-4 |
| TMF | 40 A | 500 A | T2S040TL-4 | T2H040TL-4 |
| TMF | 50 A | 500 A | T2S050TL-4 | T2H050TL-4 |
| TMF | 60 A | 600 A | T2S060TL-4 | T2H060TL-4 |
| TMF | 70 A | 700 A | T2S070TL-4 | T2H070TL-4 |
| TMF | 80 A | 800 A | T2S080TL-4 | T2H080TL-4 |
| TMF | 90 A | 900 A | T2S090TL-4 | T2H090TL-4 |
| TMF | 100 A | 1000 A | T2S100TL-4 | T2H100TL-4 |

### Tmax T2 100 A - FIXED (F) 4 poles - CSA C22.2 / UL listed (Discount DS-ST)
**Iu (40**°C) = 100 A - Front terminals (F)

| Electronic trip unit (AC only) - 480V AC | | Part number | |
|---|---|---|---|
| Type | In | S (35kA) | H (65kA) |
| PR221DS-LS/I | 25 A (10...25 A) | T2S025BW-4 | T2H025BW-4 |
| PR221DS-LS/I | 60 A (24...60 A) | T2S060BW-4 | T2H060BW-4 |
| PR221DS-LS/I | 100 A (40...100 A) | T2S100BW-4 | T2H100BW-4 |

# Tmax molded case circuit breakers
## Power distribution circuit breakers

### Tmax T2 100 A - FIXED (F) 3 poles - 100% rated - CSA C22.2 / UL listed (Discount DS-ST)

**Iu (40**°C) = 100 A - Front terminals (F)

| Thermal-Magnetic trip unit with fixed tresholds - TMF - 480V AC | | | Part number | |
|---|---|---|---|---|
| Type | In | $I_3$ | SQ (35kA) | HQ (65kA) |
| TMF | 15 A | 500 A | T2SQ015TL | T2HQ015TL |
| TMF | 20 A | 500 A | T2SQ020TL | T2HQ020TL |
| TMF | 25 A | 500 A | T2SQ025TL | T2HQ025TL |
| TMF | 30 A | 500 A | T2SQ030TL | T2HQ030TL |
| TMF | 40 A | 500 A | T2SQ040TL | T2HQ040TL |
| TMF | 50 A | 500 A | T2SQ050TL | T2HQ050TL |
| TMF | 60 A | 600 A | T2SQ060TL | T2HQ060TL |
| TMF | 70 A | 700 A | T2SQ070TL | T2HQ070TL |
| TMF | 80 A | 800 A | T2SQ080TL | T2HQ080TL |
| TMF | 90 A | 900 A | T2SQ090TL | T2HQ090TL |
| TMF | 100 A | 1000 A | T2SQ100TL | T2HQ100TL |

### Tmax T2 100 A - FIXED (F) 3 poles - 100% rated - CSA C22.2 / UL listed (Discount DS-ST)

**Iu (40**°C) = 100 A - Front terminals (F)

| Electronic trip unit (AC only) PR221DS-LS/I- 480V AC | | Part number | |
|---|---|---|---|
| Type | In | SQ (35kA) | HQ (65kA) |
| LS/I | 25 A (10...25 A) | T2SQ025BW | T2HQ025BW |
| LS/I | 60 A (24...60 A) | T2SQ060BW | T2HQ060BW |
| LS/I | 100 A (40...100 A) | T2SQ100BW | T2HQ100BW |

# Tmax molded case circuit breakers
## Power distribution circuit breakers

### Tmax T3 225 A - FIXED (F) 3 poles - CSA C22.2 / UL listed (Discount DS-ST)
**Iu (40**°C) = 225 A - Front terminals (F)

| Thermal-Magnetic trip unit with fixed tresholds - TMF - 480V AC / 500V DC | | | Part number | |
|---|---|---|---|---|
| Type | In | $I_3$ | N (25kA) | S (35kA) |
| TMF | 60 A | 600 A | T3N060TW | T3S060TW |
| TMF | 70 A | 700 A | T3N070TW | T3S070TW |
| TMF | 80 A | 800 A | T3N080TW | T3S080TW |
| TMF | 90 A | 900 A | T3N090TW | T3S090TW |
| TMF | 100 A | 1000 A | T3N100TW | T3S100TW |
| TMF | 125 A | 1250 A | T3N125TW | T3S125TW |
| TMF | 150 A | 1500 A | T3N150TW | T3S150TW |
| TMF | 175 A | 1750 A | T3N175TW | T3S175TW |
| TMF | 200 A | 2000 A | T3N200TW | T3S200TW |
| TMF | 225 A | 2250 A | T3N225TW | T3S225TW |

### Tmax T3 225 A - FIXED (F) 4 poles - CSA C22.2 / UL listed (Discount DS-ST)
**Iu (40**°C) = 225 A - Front terminals (F)

| Thermal-Magnetic trip unit with fixed tresholds - TMF - 480V AC / 500V DC | | | Part number | |
|---|---|---|---|---|
| Type | In | $I_3$ | N (25kA) | S (35kA) |
| TMF | 60 A | 600 A | T3N060TW-4 | T3S060TW-4 |
| TMF | 70 A | 700 A | T3N070TW-4 | T3S070TW-4 |
| TMF | 80 A | 800 A | T3N080TW-4 | T3S080TW-4 |
| TMF | 90 A | 900 A | T3N090TW-4 | T3S090TW-4 |
| TMF | 100 A | 1000 A | T3N100TW-4 | T3S100TW-4 |
| TMF | 125 A | 1250 A | T3N125TW-4 | T3S125TW-4 |
| TMF | 150 A | 1500 A | T3N150TW-4 | T3S150TW-4 |
| TMF | 175 A | 1750 A | T3N175TW-4 | T3S175TW-4 |
| TMF | 200 A | 2000 A | T3N200TW-4 | T3S200TW-4 |
| TMF | 225 A | 2250 A | T3N225TW-4 | T3S225TW-4 |

### Tmax T3 225 A - FIXED (F) 3 poles - 100% rated - CSA C22.2 / UL listed (Discount DS-ST)
**Iu (40**°C) = 225 A - Front terminals (F)

| Thermal-Magnetic trip unit with fixed tresholds - TMF - 480V AC / 500V DC | | | Part number | |
|---|---|---|---|---|
| Type | In | $I_3$ | NQ (25kA) | SQ (35kA) |
| TMF | 60 A | 600 A | T3NQ060TW | T3SQ060TW |
| TMF | 70 A | 700 A | T3NQ070TW | T3SQ070TW |
| TMF | 80 A | 800 A | T3NQ080TW | T3SQ080TW |
| TMF | 90 A | 900 A | T3NQ090TW | T3SQ090TW |
| TMF | 100 A | 1000 A | T3NQ100TW | T3SQ100TW |
| TMF | 125 A | 1250 A | T3NQ125TW | T3SQ125TW |
| TMF | 150 A | 1500 A | T3NQ150TW | T3SQ150TW |
| TMF | 175 A | 1750 A | T3NQ175TW | T3SQ175TW |
| TMF | 200 A | 2000 A | T3NQ200TW | T3SQ200TW |
| TMF | 225 A | 2250 A | T3NQ225TW | T3SQ225TW |

# Tmax molded case circuit breakers
## Power distribution circuit breakers

### Tmax Ts3 150 A - FIXED (F) 2 poles - CSA C22.2 / UL listed (Discount DS-ST)
**Iu (40**°C) = 150 A - Front terminals (F)

| Thermal-Magnetic trip unit with fixed tresholds - TMF - 600V AC / 500V DC | | | Part number | | |
|---|---|---|---|---|---|
| Type | In | $I_3$ | N (14kA) | H (14kA) | L (25kA) |
| TMF | 15 A | 500 A | Ts3N015TW-2 | Ts3H015TW-2 | Ts3L015TW-2 |
| TMF | 20 A | 500 A | Ts3N020TW-2 | Ts3H020TW-2 | Ts3L020TW-2 |
| TMF | 25 A | 500 A | Ts3N025TW-2 | Ts3H025TW-2 | Ts3L025TW-2 |
| TMF | 30 A | 500 A | Ts3N030TW-2 | Ts3H030TW-2 | Ts3L030TW-2 |
| TMF | 35 A | 500 A | Ts3N035TW-2 | Ts3H035TW-2 | Ts3L035TW-2 |
| TMF | 40 A | 500 A | Ts3N040TW-2 | Ts3H040TW-2 | Ts3L040TW-2 |
| TMF | 50 A | 500 A | Ts3N050TW-2 | Ts3H050TW-2 | Ts3L050TW-2 |
| TMF | 60 A | 600 A | Ts3N060TW-2 | Ts3H060TW-2 | Ts3L060TW-2 |
| TMF | 70 A | 700 A | Ts3N070TW-2 | Ts3H070TW-2 | Ts3L070TW-2 |
| TMF | 80 A | 800 A | Ts3N080TW-2 | Ts3H080TW-2 | Ts3L080TW-2 |
| TMF | 90 A | 900 A | Ts3N090TW-2 | Ts3H090TW-2 | Ts3L090TW-2 |
| TMF | 100 A | 1000 A | Ts3N100TW-2 | Ts3H100TW-2 | Ts3L100TW-2 |
| TMF | 125 A | 1250 A | Ts3N125TW-2 | Ts3H125TW-2 | Ts3L125TW-2 |
| TMF | 150 A | 1500 A | Ts3N150TW-2 | Ts3H150TW-2 | Ts3L150TW-2 |

### Tmax Ts3 225 A - FIXED (F) 2 poles - CSA C22.2 / UL listed (Discount DS-ST)
**Iu (40**°C) = 225 A - Front terminals (F)

| Thermal-Magnetic trip unit with fixed tresholds - TMF - 480V AC / 500V DC | | | Part number | | |
|---|---|---|---|---|---|
| Type | In | $I_3$ | N (25kA) | H (50kA) | L (65kA) |
| TMF | 175 A | 1750 A | Ts3N175TW-2 | Ts3H175TW-2 | Ts3L175TW-2 |
| TMF | 200 A | 2000 A | Ts3N200TW-2 | Ts3H200TW-2 | Ts3L200TW-2 |
| TMF | 225 A | 2250 A | Ts3N225TW-2 | Ts3H225TW-2 | Ts3L225TW-2 |

### Tmax Ts3 150 A - FIXED (F) 3 poles - CSA C22.2 / UL listed (Discount DS-ST)
**Iu (40**°C) = 150 A - Front terminals (F)

| Thermal-Magnetic trip unit with fixed tresholds - TMF - 600V AC / 600V DC | | | Part number | | |
|---|---|---|---|---|---|
| Type | | | N (14kA) | H (14kA) | L (25kA) |
| TMF | 15 A | 500 A | Ts3N015TW | Ts3H015TW | Ts3L015TW |
| TMF | 20 A | 500 A | Ts3N020TW | Ts3H020TW | Ts3L020TW |
| TMF | 25 A | 500 A | Ts3N025TW | Ts3H025TW | Ts3L025TW |
| TMF | 30 A | 500 A | Ts3N030TW | Ts3H030TW | Ts3L030TW |
| TMF | 35 A | 500 A | Ts3N035TW | Ts3H035TW | Ts3L035TW |
| TMF | 40 A | 500 A | Ts3N040TW | Ts3H040TW | Ts3L040TW |
| TMF | 50 A | 500 A | Ts3N050TW | Ts3H050TW | Ts3L050TW |
| TMF | 60 A | 600 A | Ts3N060TW | Ts3H060TW | Ts3L060TW |
| TMF | 70 A | 700 A | Ts3N070TW | Ts3H070TW | Ts3L070TW |
| TMF | 80 A | 800 A | Ts3N080TW | Ts3H080TW | Ts3L080TW |
| TMF | 90 A | 900 A | Ts3N090TW | Ts3H090TW | Ts3L090TW |
| TMF | 100 A | 1000 A | Ts3N100TW | Ts3H100TW | Ts3L100TW |
| TMF | 125 A | 1250 A | Ts3N125TW | Ts3H125TW | Ts3L125TW |
| TMF | 150 A | 1500 A | Ts3N150TW | Ts3H150TW | Ts3L150TW |

# Tmax molded case circuit breakers
## Power distribution circuit breakers

### Tmax Ts3 225 A - FIXED (F) 3 poles - CSA C22.2 / UL listed (Discount DS-ST)
**Iu (40**°C) = 225 A - Front terminals (F)

| Thermal-Magnetic trip unit with fixed tresholds - TMF - 480V AC / 500V DC | | | Part number | | |
|---|---|---|---|---|---|
| Type | In | $I_3$ | N (25kA) | H (50kA) | L (65kA) |
| TMF | 175 A | 1750 A | Ts3N175TW | Ts3H175TW | Ts3L175TW |
| TMF | 200 A | 2000 A | Ts3N200TW | Ts3H200TW | Ts3L200TW |
| TMF | 225 A | 2250 A | Ts3N225TW | Ts3H225TW | Ts3L225TW |

### Tmax Ts3 150 A - FIXED (F) 4 poles - CSA C22.2 / UL listed (Discount DS-ST)
**Iu (40**°C) = 150 A - Front terminals (F)

| Thermal-Magnetic trip unit with fixed tresholds - TMF - 600V AC / 600V DC | | | Part number |
|---|---|---|---|
| Type | In | $I_3$ | N (14kA) |
| TMF | 15 A | 500 A | Ts3N015TW-4 |
| TMF | 20 A | 500 A | Ts3N020TW-4 |
| TMF | 25 A | 500 A | Ts3N025TW-4 |
| TMF | 30 A | 500 A | Ts3N030TW-4 |
| TMF | 35 A | 500 A | Ts3N035TW-4 |
| TMF | 40 A | 500 A | Ts3N040TW-4 |
| TMF | 50 A | 500 A | Ts3N050TW-4 |
| TMF | 60 A | 600 A | Ts3N060TW-4 |
| TMF | 70 A | 700 A | Ts3N070TW-4 |
| TMF | 80 A | 800 A | Ts3N080TW-4 |
| TMF | 90 A | 900 A | Ts3N090TW-4 |
| TMF | 100 A | 1000 A | Ts3N100TW-4 |
| TMF | 125 A | 1250 A | Ts3N125TW-4 |
| TMF | 150 A | 1500 A | Ts3N150TW-4 |

### Tmax Ts3 225 A - FIXED (F) 4 poles - CSA C22.2 / UL listed (Discount DS-ST)
**Iu (40**°C) = 225 A - Front terminals (F)

| Thermal-Magnetic trip unit with fixed tresholds - TMF - 480V AC / 500V DC | | | Part number |
|---|---|---|---|
| Type | In | $I_3$ | N (25kA) |
| TMF | 175 A | 1750 A | Ts3N175TW-4 |
| TMF | 200 A | 2000 A | Ts3N200TW-4 |
| TMF | 225 A | 2250 A | Ts3N225TW-4 |

# Tmax molded case circuit breakers
## Power distribution circuit breakers

### Tmax Ts3 150 A - FIXED (F) 3 poles - 100% rated - CSA C22.2 / UL listed (DiscountDS-ST)

**Iu (40**°C) = 150 A - Front terminals (F)

| Thermal-Magnetic trip unit with fixed tresholds - TMF - 600V AC / 600V DC | | | Part number | | |
|---|---|---|---|---|---|
| Type | In | $I_3$ | NQ (14kA) | HQ (14kA) | LQ (25kA) |
| TMF | 15 A | 500 A | Ts3NQ015TW | Ts3HQ015TW | Ts3LQ015TW |
| TMF | 20 A | 500 A | Ts3NQ020TW | Ts3HQ020TW | Ts3LQ020TW |
| TMF | 25 A | 500 A | Ts3NQ025TW | Ts3HQ025TW | Ts3LQ025TW |
| TMF | 30 A | 500 A | Ts3NQ030TW | Ts3HQ030TW | Ts3LQ030TW |
| TMF | 35 A | 500 A | Ts3NQ035TW | Ts3HQ035TW | Ts3LQ035TW |
| TMF | 40 A | 500 A | Ts3NQ040TW | Ts3HQ040TW | Ts3LQ040TW |
| TMF | 50 A | 500 A | Ts3NQ050TW | Ts3HQ050TW | Ts3LQ050TW |
| TMF | 60 A | 600 A | Ts3NQ060TW | Ts3HQ060TW | Ts3LQ060TW |
| TMF | 70 A | 700 A | Ts3NQ070TW | Ts3HQ070TW | Ts3LQ070TW |
| TMF | 80 A | 800 A | Ts3NQ080TW | Ts3HQ080TW | Ts3LQ080TW |
| TMF | 90 A | 900 A | Ts3NQ090TW | Ts3HQ090TW | Ts3LQ090TW |
| TMF | 100 A | 1000 A | Ts3NQ100TW | Ts3HQ100TW | Ts3LQ100TW |
| TMF | 125 A | 1250 A | Ts3NQ125TW | Ts3HQ125TW | Ts3LQ125TW |
| TMF | 150 A | 1500 A | Ts3NQ150TW | Ts3HQ150TW | Ts3LQ150TW |

### Tmax Ts3 225 A - FIXED (F) 3 poles - 100% rated - CSA C22.2 / UL listed (Discount DS-ST)

**Iu (40**°C) = 225 A - Front terminals (F)

| Thermal-Magnetic trip unit with fixed tresholds - TMF - 480V AC / 500V DC | | | Part number | | |
|---|---|---|---|---|---|
| Type | In | $I_3$ | NQ (25kA) | HQ (50kA) | LQ (65kA) |
| TMF | 175 A | 1750 A | Ts3NQ175TW | Ts3HQ175TW | Ts3LQ175TW |
| TMF | 200 A | 2000 A | Ts3NQ200TW | Ts3HQ200TW | Ts3LQ200TW |
| TMF | 225 A | 2250 A | Ts3NQ225TW | Ts3HQ225TW | Ts3LQ225TW |

# Tmax molded case circuit breakers
## Power distribution circuit breakers

### Tmax T4 250 A - FIXED (F) 2 poles - CSA C22.2 / UL listed (Discount DS-ST)
**Iu (40**°C) = 250 A - Front terminals (F)

| Thermal-Magnetic trip unit - TMD/TMA - 600V AC / 500V DC | | | Part number |
|---|---|---|---|
| Type | In | $I_3$ | N (18kA) |
| TMD | 30 A (21...30 A) | 500 A | T4N030TW-2 |
| TMD | 40 A (28...40 A) | 500 A | T4N040TW-2 |
| TMD | 50 A (36...50 A) | 500 A | T4N050TW-2 |
| TMA | 80 A (56...80 A) | 800 A (400...800A) | T4N080TW-2 |
| TMA | 100 A (70...100 A) | 1000 A (500...1000A) | T4N100TW-2 |
| TMA | 125 A (88...125 A) | 1250 A (625...1250 A) | T4N125TW-2 |
| TMA | 150 A (100...150 A) | 1500 A (750...1500 A) | T4N150TW-2 |
| TMA | 200 A (140...200 A) | 2000 A (1000...2000 A) | T4N200TW-2 |
| TMA | 250 A (175...250 A) | 2500 A (1250...2500 A) | T4N250TW-2 |

### Tmax T4 100 A - FIXED (F) 2 poles - CSA C22.2 / UL listed (Discount DS-ST)
**Iu (40**°C) = 100 A - Front terminals (F)

| Electronic trip unit (AC only) - 600V AC | | Part number |
|---|---|---|
| Type | In | N (18kA) |
| PR221DS-LS/I | 100 A (40...100 A) | T4N100BW-2 |
| PR222DS-LSI | 100 A (40...100 A) | T4N100CW-2 |
| PR222DS-LSIG | 100 A (40...100 A) | T4N100EW-2 |

### Tmax T4 150 A - FIXED (F) 2 poles - CSA C22.2 / UL listed (Discount DS-ST)
**Iu (40**°C) = 150 A - Front terminals (F)

| Electronic trip unit (AC only) - 600V AC | | Part number |
|---|---|---|
| Type | In | N (18kA) |
| PR221DS-LS/I | 150 A (60...150 A) | T4N150BW-2 |
| PR222DS-LSI | 150 A (60...150 A) | T4N150CW-2 |
| PR222DS-LSIG | 150 A (60...150 A) | T4N150EW-2 |

### Tmax T4 250 A - FIXED (F) 2 poles - CSA C22.2 / UL listed (Discount DS-ST)
**Iu (40**°C) = 250 A - Front terminals (F)

| Electronic trip unit (AC only) - 600V AC | | Part number |
|---|---|---|
| Type | In | N (18kA) |
| PR221DS-LS/I | 250 A (60...150 A) | T4N250BW-2 |
| PR222DS-LSI | 250 A (60...150 A) | T4N250CW-2 |
| PR222DS-LSIG | 250 A (60...150 A) | T4N250EW-2 |

# Tmax molded case circuit breakers
## Power distribution circuit breakers

### Tmax T4 250 A - FIXED (F) 3 poles - CSA C22.2 / UL listed (Discount DS-ST)
**Iu (40**°C) = 250 A - Front terminals (F)

| Thermal-Magnetic trip unit - TMF/TMD/TMA - 600V AC / 600V DC | | | Part number | | | | |
|---|---|---|---|---|---|---|---|
| Type | In | $I_3$ | N (18kA) | S (25kA) | H (35kA) | L (65kA) | V (100kA) |
| TMF | 20 A | 500 A | T4N020TW | T4S020TW | T4H020TW | T4L020TW | T4V020TW |
| TMD | 30 A (21...30 A) | 500 A | T4N030TW | T4S030TW | T4H030TW | T4L030TW | T4V030TW |
| TMD | 40 A (28...40 A) | 500 A | T4N040TW | T4S040TW | T4H040TW | T4L040TW | T4V040TW |
| TMD | 50 A (36...50 A) | 500 A | T4N050TW | T4S050TW | T4H050TW | T4L050TW | T4V050TW |
| TMA | 80 A (56...80 A) | 800 A (400...800A) | T4N080TW | T4S080TW | T4H080TW | T4L080TW | T4V080TW |
| TMA | 100 A (70...100 A) | 1000 A (500...1000A) | T4N100TW | T4S100TW | T4H100TW | T4L100TW | T4V100TW |
| TMA | 125 A (88...125 A) | 1250 A (625...1250 A) | T4N125TW | T4S125TW | T4H125TW | T4L125TW | T4V125TW |
| TMA | 150 A (100...150 A) | 1500 A (750...1500 A) | T4N150TW | T4S150TW | T4H150TW | T4L150TW | T4V150TW |
| TMA | 200 A (140...200 A) | 2000 A (1000...2000 A) | T4N200TW | T4S200TW | T4H200TW | T4L200TW | T4V200TW |
| TMA | 250 A (175...250 A) | 2500 A (1250...2500 A) | T4N250TW | T4S250TW | T4H250TW | T4L250TW | T4V250TW |

### Tmax T4 100 A - FIXED (F) 3 poles - CSA C22.2 / UL listed (Discount DS-ST)
**Iu (40**°C) = 100 A - Front terminals (F)

| Electronic trip unit (AC only) - 600V AC | | Part number | | | | |
|---|---|---|---|---|---|---|
| Type | In | N (18kA) | S (25kA) | H (35kA) | L (65kA) | V (100kA) |
| PR221DS-LS/I | 100 A (40...100 A) | T4N100BW | T4S100BW | T4H100BW | T4L100BW | T4V100BW |
| PR222DS-LSI | 100 A (40...100 A) | T4N100CW | T4S100CW | T4H100CW | T4L100CW | T4V100CW |
| PR222DS-LSIG | 100 A (40...100 A) | T4N100EW | T4S100EW | T4H100EW | T4L100EW | T4V100EW |

### Tmax T4 150 A - FIXED (F) 3 poles - CSA C22.2 / UL listed (Discount DS-ST)
**Iu (40**°C) = 150 A - Front terminals (F)

| Electronic trip unit (AC only) - 600V AC | | Part number | | | | |
|---|---|---|---|---|---|---|
| Type | In | N (18kA) | S (25kA) | H (35kA) | L (65kA) | V (100kA) |
| PR221DS-LS/I | 150 A (60...150 A) | T4N150BW | T4S150BW | T4H150BW | T4L150BW | T4V150BW |
| PR222DS-LSI | 150 A (60...150 A) | T4N150CW | T4S150CW | T4H150CW | T4L150CW | T4V150CW |
| PR222DS-LSIG | 150 A (60...150 A) | T4N150EW | T4S150EW | T4H150EW | T4L150EW | T4V150EW |

### Tmax T4 250 A - FIXED (F) 3 poles - CSA C22.2 / UL listed (Discount DS-ST)
**Iu (40**°C) = 250 A - Front terminals (F)

| Electronic trip unit (AC only) - 600V AC | | Part number | | | | |
|---|---|---|---|---|---|---|
| Type | In | N (18kA) | S (25kA) | H (35kA) | L (65kA) | V (100kA) |
| PR221DS-LS/I | 250 A (100...250 A) | T4N250BW | T4S250BW | T4H250BW | T4L250BW | T4V250BW |
| PR222DS-LSI | 250 A (100...250 A) | T4N250CW | T4S250CW | T4H250CW | T4L250CW | T4V250CW |
| PR222DS-LSIG | 250 A (100...250 A) | T4N250EW | T4S250EW | T4H250EW | T4L250EW | T4V250EW |

# Tmax molded case circuit breakers
## Power distribution circuit breakers

### Tmax T4 250 A - FIXED (F) 3 poles - 100% rated - CSA C22.2 / UL listed (Discount DS-ST)
**Iu (40**°C) = 250 A - Front terminals (F)

| Thermal-Magnetic trip unit - TMF/TMD/TMA - 600V AC / 600V DC | | | Part number | | | | |
|---|---|---|---|---|---|---|---|
| Type | | | NQ (18kA) | SQ (25kA) | HQ (35kA) | LQ (65kA) | VQ (100kA) |
| TMF | 20 A | 500 A | T4NQ020TW | T4SQ020TW | T4HQ020TW | T4LQ020TW | T4VQ020TW |
| TMD | 30 A (21...30 A) | 500 A | T4NQ030TW | T4SQ030TW | T4HQ030TW | T4LQ030TW | T4VQ030TW |
| TMD | 40 A (28...40 A) | 500 A | T4NQ040TW | T4SQ040TW | T4HQ040TW | T4LQ040TW | T4VQ040TW |
| TMD | 50 A (36...50 A) | 500 A | T4NQ050TW | T4SQ050TW | T4HQ050TW | T4LQ050TW | T4VQ050TW |
| TMA | 80 A (56...80 A) | 800 A (400...800A) | T4NQ080TW | T4SQ080TW | T4HQ080TW | T4LQ080TW | T4VQ080TW |
| TMA | 100 A (70...100 A) | 1000 A (500...1000A) | T4NQ100TW | T4SQ100TW | T4HQ100TW | T4LQ100TW | T4VQ100TW |
| TMA | 125 A (88...125 A) | 1250 A (625...1250 A) | T4NQ125TW | T4SQ125TW | T4HQ125TW | T4LQ125TW | T4VQ125TW |
| TMA | 150 A (100...150 A) | 1500 A (750...1500 A) | T4NQ150TW | T4SQ150TW | T4HQ150TW | T4LQ150TW | T4VQ150TW |
| TMA | 200 A (140...200 A) | 2000 A (1000...2000 A) | T4NQ200TW | T4SQ200TW | T4HQ200TW | T4LQ200TW | T4VQ200TW |
| TMA | 250 A (175...250 A) | 2500 A (1250...2500 A) | T4NQ250TW | T4SQ250TW | T4HQ250TW | T4LQ250TW | T4VQ250TW |

### Tmax T4 100 A - FIXED (F) 3 poles - 100% rated - CSA C22.2 / UL listed (Discount DS-ST)
**Iu (40**°C) = 100 A - Front terminals (F)

| Electronic trip unit (AC only) - 600V AC | | Part number | | | | |
|---|---|---|---|---|---|---|
| Type | In | NQ (18kA) | SQ (25kA) | HQ (35kA) | LQ (65kA) | VQ (100kA) |
| PR221DS-LS/I | 100 A (40...100 A) | T4NQ100BW | T4SQ100BW | T4HQ100BW | T4LQ100BW | T4VQ100BW |
| PR222DS-LSI | 100 A (40...100 A) | T4NQ100CW | T4SQ100CW | T4HQ100CW | T4LQ100CW | T4VQ100CW |
| PR222DS-LSIG | 100 A (40...100 A) | T4NQ100EW | T4SQ100EW | T4HQ100EW | T4LQ100EW | T4VQ100EW |

### Tmax T4 150 A - FIXED (F) 3 poles - 100% rated - CSA C22.2 / UL listed (Discount DS-ST)
**Iu (40**°C) = 150 A - Front terminals (F)

| Electronic trip unit (AC only) - 600V AC | | Part number | | | | |
|---|---|---|---|---|---|---|
| Type | In | NQ (18kA) | SQ (25kA) | HQ (35kA) | LQ (65kA) | VQ (100kA) |
| PR221DS-LS/I | 150 A (60...150 A) | T4NQ150BW | T4SQ150BW | T4HQ150BW | T4LQ150BW | T4VQ150BW |
| PR222DS-LSI | 150 A (60...150 A) | T4NQ150CW | T4SQ150CW | T4HQ150CW | T4LQ150CW | T4VQ150CW |
| PR222DS-LSIG | 150 A (60...150 A) | T4NQ150EW | T4SQ150EW | T4HQ150EW | T4LQ150EW | T4VQ150EW |

### Tmax T4 250 A - FIXED (F) 3 poles - 100% rated - CSA C22.2 / UL listed (Discount DS-ST)
**Iu (40**°C) = 250 A - Front terminals (F)

| Electronic trip unit (AC only) - 600V AC | | Part number | | | | |
|---|---|---|---|---|---|---|
| Type | In | NQ (18kA) | SQ (25kA) | HQ (35kA) | LQ (65kA) | VQ (100kA) |
| PR221DS-LS/I | 250 A (100...250 A) | T4NQ250BW | T4SQ250BW | T4HQ250BW | T4LQ250BW | T4VQ250BW |
| PR222DS-LSI | 250 A (100...250 A) | T4NQ250CW | T4SQ250CW | T4HQ250CW | T4LQ250CW | T4VQ250CW |
| PR222DS-LSIG | 250 A (100...250 A) | T4NQ250EW | T4SQ250EW | T4HQ250EW | T4LQ250EW | T4VQ250EW |

# Tmax molded case circuit breakers
## Power distribution circuit breakers

### Tmax T4 250 A - FIXED (F) 4 poles - CSA C22.2 / UL listed (Discount DS-ST)
**Iu (40**°C) = 250 A - Front terminals (F)

| Thermal-Magnetic trip unit - TMF/TMD/TMA - 600V AC / 600V DC | | | Part number | |
|---|---|---|---|---|
| Type | In | $I_3$ | N (18kA) | H (35kA) |
| TMF | 20 A | 500 A | T4N020TW-4 | T4H020TW-4 |
| TMD | 30 A (21...30 A) | 500 A | T4N030TW-4 | T4H030TW-4 |
| TMD | 40 A (28...40 A) | 500 A | T4N040TW-4 | T4H040TW-4 |
| TMD | 50 A (36...50 A) | 500 A | T4N050TW-4 | T4H050TW-4 |
| TMA | 80 A (56...80 A) | 800 A (400...800A) | T4N080TW-4 | T4H080TW-4 |
| TMA | 100 A (70...100 A) | 1000 A (500...1000A) | T4N100TW-4 | T4H100TW-4 |
| TMA | 125 A (88...125 A) | 1250 A (625...1250 A) | T4N125TW-4 | T4H125TW-4 |
| TMA | 150 A (100...150 A) | 1500 A (750...1500 A) | T4N150TW-4 | T4H150TW-4 |
| TMA | 200 A (140...200 A) | 2000 A (1000...2000 A) | T4N200TW-4 | T4H200TW-4 |
| TMA | 250 A (175...250 A) | 2500 A (1250...2500 A) | T4N250TW-4 | T4H250TW-4 |

### Tmax T4 100 A - FIXED (F) 4 poles - CSA C22.2 / UL listed (Discount DS-ST)
**Iu (40**°C) = 100 A - Front terminals (F)

| Electronic trip unit (AC only) - 600V AC | | Part number | |
|---|---|---|---|
| Type | In | N (18kA) | H (35kA) |
| PR221DS-LS/I | 100 A (40...100 A) | T4N100BW-4 | T4H100BW-4 |
| PR222DS-LSI | 100 A (40...100 A) | T4N100CW-4 | T4H100CW-4 |
| PR222DS-LSIG | 100 A (40...100 A) | T4N100EW-4 | T4H100EW-4 |

### Tmax T4 150 A - FIXED (F) 4 poles - CSA C22.2 / UL listed (Discount DS-ST)
**Iu (40**°C) = 150 A - Front terminals (F)

| Electronic trip unit (AC only) - 600V AC | | Part number | |
|---|---|---|---|
| Type | In | N (18kA) | H (35kA) |
| PR221DS-LS/I | 150 A (60...150 A) | T4N150BW-4 | T4H150BW-4 |
| PR222DS-LSI | 150 A (60...150 A) | T4N150CW-4 | T4H150CW-4 |
| PR222DS-LSIG | 150 A (60...150 A) | T4N150EW-4 | T4H150EW-4 |

### Tmax T4 250 A - FIXED (F) 4 poles - CSA C22.2 / UL listed (Discount DS-ST)
**Iu (40**°C) = 250 A - Front terminals (F)

| Electronic trip unit (AC only) - 600V AC | | Part number | |
|---|---|---|---|
| Type | In | N (18kA) | H (35kA) |
| PR221DS-LS/I | 250 A (100...250 A) | T4N250BW-4 | T4H250BW-4 |
| PR222DS-LSI | 250 A (100...250 A) | T4N250CW-4 | T4H250CW-4 |
| PR222DS-LSIG | 250 A (100...250 A) | T4N250EW-4 | T4H250EW-4 |

# Tmax molded case circuit breakers
## Power distribution circuit breakers

### Tmax T5 300 A - FIXED (F) 2 poles - CSA C22.2 / UL listed (Discount DS-ST)
**Iu (40**°C) = 300 A - Front terminals (F)

| Thermal-Magnetic trip unit - TMA - 600V AC / 500V DC | | | Part number |
|---|---|---|---|
| Type | In | $I_3$ | N (18kA) |
| TMA | 300 A (210...300 A) | 3000 A (1500...3000 A) | T5N300TW-2 |

### Tmax T5 300 A - FIXED (F) 2 poles - CSA C22.2 / UL listed (Discount DS-ST)
**Iu (40**°C) = 300 A - Front terminals (F)

| Electronic trip unit (AC only)- 600V AC | | Part number |
|---|---|---|
| Type | In | N (18kA) |
| PR221DS-LS/I | 300 A (120...300 A) | T5N300BW-2 |
| PR222DS-LSI | 300 A (120...300 A) | T5N300CW-2 |
| PR222DS-LSIG | 300 A (120...300 A) | T5N300EW-2 |

### Tmax T5 400 A - FIXED (F) 2 poles - CSA C22.2 / UL listed (Discount DS-ST)
**Iu (40**°C) = 400 A - Front terminals (F)

| Thermal-Magnetic trip unit - TMA - 600V AC / 500V DC | | | Part number |
|---|---|---|---|
| Type | In | $I_3$ | N (18kA) |
| TMA | 400 A (280...400 A) | 4000 A (2000...4000 A) | T5N400TW-2 |

### Tmax T5 400 A - FIXED (F) 2 poles - CSA C22.2 / UL listed (Discount DS-ST)
**Iu (40**°C) = 400 A - Front terminals (F)

| Electronic trip unit (AC only) - 600V AC | | Part number |
|---|---|---|
| Type | In | N (18kA) |
| PR221DS-LS/I | 400 A (160...400 A) | T5N400BW-2 |
| PR222DS-LSI | 400 A (160...400 A) | T5N400CW-2 |
| PR222DS-LSIG | 400 A (160...400 A) | T5N400EW-2 |

# Tmax molded case circuit breakers
## Power distribution circuit breakers

### Tmax T5 300 A - FIXED (F) 3 poles - CSA C22.2 / UL listed (Discount DS-ST)
**Iu (40**°C) = 300 A - Front terminals (F)

| Thermal-Magnetic trip unit - TMA - 600V AC / 600V DC | | | Part number | | | | |
|---|---|---|---|---|---|---|---|
| Type | In | $I_3$ | N (18kA) | S (25kA) | H (35kA) | L (65kA) | V (100kA) |
| TMA | 300 A (210...300 A) | 3000 A (1500...3000 A) | T5N300TW | T5S300TW | T5H300TW | T5L300TW | T5V300TW |

### Tmax T5 300 A - FIXED (F) 3 poles - CSA C22.2 / UL listed (Discount DS-ST)
**Iu (40**°C) = 300 A - Front terminals (F)

| Electronic trip unit (AC only) - 600V AC | | Part number | | | | |
|---|---|---|---|---|---|---|
| Type | In | N (18kA) | S (25kA) | H (35kA) | L (65kA) | V (100kA) |
| PR221DS-LS/I | 300 A (120...300 A) | T5N300BW | T5S300BW | T5H300BW | T5L300BW | T5V300BW |
| PR222DS-LSI | 300 A (120...300 A) | T5N300CW | T5S300CW | T5H300CW | T5L300CW | T5V300CW |
| PR222DS-LSIG | 300 A (120...300 A) | T5N300EW | T5S300EW | T5H300EW | T5L300EW | T5V300EW |

### Tmax T5 400 A - FIXED (F) 3 poles - CSA C22.2 / UL listed (Discount DS-ST)
**Iu (40**°C) = 400 A - Front terminals (F)

| Thermal-Magnetic trip unit - TMA - 600V AC / 600V DC | | | Part number | | | | |
|---|---|---|---|---|---|---|---|
| Type | In | $I_3$ | N (18kA) | S (25kA) | H (35kA) | L (65kA) | V (100kA) |
| TMA | 400 A (280...400 A) | 4000 A (2000...4000 A) | T5N400TW | T5S400TW | T5H400TW | T5L400TW | T5V400TW |

### Tmax T5 400 A - FIXED (F) 3 poles - CSA C22.2 / UL listed (Discount DS-ST)
**Iu (40**°C) = 400 A - Front terminals (F)

| Electronic trip unit (AC only) - 600V AC | | Part number | | | | |
|---|---|---|---|---|---|---|
| Type | In | N (18kA) | S (25kA) | H (35kA) | L (65kA) | V (100kA) |
| PR221DS-LS/I | 400 A (160...400 A) | T5N400BW | T5S400BW | T5H400BW | T5L400BW | T5V400BW |
| PR222DS-LSI | 400 A (160...400 A) | T5N400CW | T5S400CW | T5H400CW | T5L400CW | T5V400CW |
| PR222DS-LSIG | 400 A (160...400 A) | T5N400EW | T5S400EW | T5H400EW | T5L400EW | T5V400EW |

### Tmax T5 600 A - FIXED (F) 3 poles - CSA C22.2 / UL listed (Discount DS-ST)
**Iu (40**°C) = 600 A - Front terminals (F)

| Electronic trip unit (AC only) - 600V AC | | Part number | | | | |
|---|---|---|---|---|---|---|
| Type | In | N (18kA) | S (25kA) | H (35kA) | L (65kA) | V (100kA) |
| PR221DS-LS/I | 600 A (240...600 A) | T5N600BW | T5S600BW | T5H600BW | T5L600BW | T5V600BW |
| PR222DS-LSI | 600 A (240...600 A) | T5N600CW | T5S600CW | T5H600CW | T5L600CW | T5V600CW |
| PR222DS-LSIG | 600 A (240...600 A) | T5N600EW | T5S600EW | T5H600EW | T5L600EW | T5V600EW |

# Tmax molded case circuit breakers
## Power distribution circuit breakers

### Tmax T5 300 A - FIXED (F) 3 poles - 100% rated - CSA C22.2 / UL listed (Discount DS-ST)
**Iu (40**°C) = 300 A - Front terminals (F)

| Thermal-Magnetic trip unit - TMA - 600V AC / 600V DC | | | Part number | | | | |
|---|---|---|---|---|---|---|---|
| Type | In | $I_3$ | NQ (18kA) | SQ (25kA) | HQ (35kA) | LQ (65kA) | VQ (100kA) |
| TMA | 300 A (210...300 A) | 3000 A (1500...3000 A) | T5NQ300TW | T5SQ300TW | T5HQ300TW | T5LQ300TW | T5VQ300TW |

### Tmax T5 300 A - FIXED (F) 3 poles - 100% rated - CSA C22.2 / UL listed (Discount DS-ST)
**Iu (40**°C) = 300 A - Front terminals (F)

| Electronic trip unit (AC only) - 600V AC | | Part number | | | | |
|---|---|---|---|---|---|---|
| Type | In | NQ (18kA) | SQ (25kA) | HQ (35kA) | LQ (65kA) | VQ (100kA) |
| PR221DS-LS/I | 300 A (120...300 A) | T5NQ300BW | T5SQ300BW | T5HQ300BW | T5LQ300BW | T5VQ300BW |
| PR222DS-LSI | 300 A (120...300 A) | T5NQ300CW | T5SQ300CW | T5HQ300CW | T5LQ300CW | T5VQ300CW |
| PR222DS-LSIG | 300 A (120...300 A) | T5NQ300EW | T5SQ300EW | T5HQ300EW | T5LQ300EW | T5VQ300EW |

### Tmax T5 400 A - FIXED (F) 3 poles - 100% rated - CSA C22.2 / UL listed (Discount DS-ST)
**Iu (40**°C) = 400 A - Front terminals (F)

| Thermal-Magnetic trip unit - TMA - 600V AC / 600V DC | | | Part number | | | | |
|---|---|---|---|---|---|---|---|
| Type | In | $I_3$ | NQ (18kA) | SQ (25kA) | HQ (35kA) | LQ (65kA) | VQ (100kA) |
| TMA | 400 A (280...400 A) | 4000 A (2000...4000 A) | T5NQ400TW | T5SQ400TW | T5HQ400TW | T5LQ400TW | T5VQ400TW |

### Tmax T5 400 A - FIXED (F) 3 poles - 100% rated - CSA C22.2 / UL listed (Discount DS-ST)
**Iu (40**°C) = 400 A - Front terminals (F)

| Electronic trip unit (AC only) - 600V AC | | Part number | | | | |
|---|---|---|---|---|---|---|
| Type | In | NQ (18kA) | SQ (25kA) | HQ (35kA) | LQ (65kA) | VQ (100kA) |
| PR221DS-LS/I | 400 A (160...400 A) | T5NQ400BW | T5SQ400BW | T5HQ400BW | T5LQ400BW | T5VQ400BW |
| PR222DS-LSI | 400 A (160...400 A) | T5NQ400CW | T5SQ400CW | T5HQ400CW | T5LQ400CW | T5VQ400CW |
| PR222DS-LSIG | 400 A (160...400 A) | T5NQ400EW | T5SQ400EW | T5HQ400EW | T5LQ400EW | T5VQ400EW |

# Tmax molded case circuit breakers
## Power distribution circuit breakers

### Tmax T5 300 A - FIXED (F) 4 poles - CSA C22.2 / UL listed (Discount DS-ST)
**Iu (40**°C) = 300 A - Front terminals (F)

| Thermal-Magnetic trip unit - TMA - 600V AC / 600V DC | | | Part number | | | | |
|---|---|---|---|---|---|---|---|
| Type | In | $I_3$ | N (18kA) | S (25kA) | H (35kA) | L (65kA) | V (100kA) |
| TMA | 300 A (210...300 A) | 3000 A (1500...3000 A) | T5N300TW-4 | T5S300TW-4 | T5H300TW-4 | T5L300TW-4 | T5V300TW-4 |

### Tmax T5 300 A - FIXED (F) 4 poles - CSA C22.2 / UL listed (Discount DS-ST)
**Iu (40**°C) = 300 A - Front terminals (F)

| Electronic trip unit (AC only) - 600V AC | | Part number | | | | |
|---|---|---|---|---|---|---|
| Type | In | N (18kA) | S (25kA) | H (35kA) | L (65kA) | V (100kA) |
| PR221DS-LS/I | 300 A (120...300 A) | T5N300BW-4 | T5S300BW-4 | T5H300BW-4 | T5L300BW-4 | T5V300BW-4 |
| PR222DS-LSI | 300 A (120...300 A) | T5N300CW-4 | T5S300CW-4 | T5H300CW-4 | T5L300CW-4 | T5V300CW-4 |
| PR222DS-LSIG | 300 A (120...300 A) | T5N300EW-4 | T5S300EW-4 | T5H300EW-4 | T5L300EW-4 | T5V300EW-4 |

### Tmax T5 400 A - FIXED (F) 4 poles - CSA C22.2 / UL listed (Discount DS-ST)
**Iu (40**°C) = 400 A - Front terminals (F)

| Thermal-Magnetic trip unit - TMA - 600V AC / 600V DC | | | Part number | | | | |
|---|---|---|---|---|---|---|---|
| Type | In | $I_3$ | N (18kA) | S (25kA) | H (35kA) | L (65kA) | V (100kA) |
| TMA | 400 A (280...400 A) | 4000 A (2000...4000 A) | T5N400TW-4 | T5S400TW-4 | T5H400TW-4 | T5L400TW-4 | T5V400TW-4 |

### Tmax T5 400 A - FIXED (F) 4 poles - CSA C22.2 / UL listed (Discount DS-ST)
**Iu (40**°C) = 400 A - Front terminals (F)

| Electronic trip unit (AC only) - 600V AC | | Part number | | | | |
|---|---|---|---|---|---|---|
| Type | In | N (18kA) | S (25kA) | H (35kA) | L (65kA) | V (100kA) |
| PR221DS-LS/I | 400 A (160...400 A) | T5N400BW-4 | T5S400BW-4 | T5H400BW-4 | T5L400BW-4 | T5V400BW-4 |
| PR222DS-LSI | 400 A (160...400 A) | T5N400CW-4 | T5S400CW-4 | T5H400CW-4 | T5L400CW-4 | T5V400CW-4 |
| PR222DS-LSIG | 400 A (160...400 A) | T5N400EW-4 | T5S400EW-4 | T5H400EW-4 | T5L400EW-4 | T5V400EW-4 |

# Tmax molded case circuit breakers
## Power distribution circuit breakers

### Tmax T6 600 A - FIXED (F) 3 poles - CSA C22.2 / UL listed (Discount DS-ST)
**Iu (40**°C) = 600 A - Front terminals (F)

| Thermal-Magnetic trip unit - TMA - 600V AC / 600V DC | | | Part number | | | |
|---|---|---|---|---|---|---|
| Type | In | $I_3$ | N (20kA) | S (25kA) | H (35kA) | L (42kA) |
| TMA | 600 A (420...600 A) | 6000 A (3000...6000 A) | T6N600TW | T6S600TW | T6H600TW | T6L600TW |

### Tmax T6 600 A - FIXED (F) 3 poles - CSA C22.2 / UL listed (Discount DS-ST)
**Iu (40**°C) = 600 A - Front terminals (F)

| Electronic trip unit (AC only) - 600V AC | | Part number | | | |
|---|---|---|---|---|---|
| Type | In | N (20kA) | S (25kA) | H (35kA) | L (42kA) |
| PR221DS-LS/I | 600 A (240...600 A) | T6N600BW | T6S600BW | T6H600BW | T6L600BW |
| PR222DS-LSI | 600 A (240...600 A) | T6N600CW | T6S600CW | T6H600CW | T6L600CW |
| PR222DS-LSIG | 600 A (240...600 A) | T6N600EW | T6S600EW | T6H600EW | T6L600EW |

### Tmax T6 800 A - FIXED (F) 3 poles - CSA C22.2 / UL listed (Discount DS-ST)
**Iu (40**°C) = 800 A - Front terminals (F)

| Thermal-Magnetic trip unit - TMA - 600V AC / 600V DC | | | Part number | | | |
|---|---|---|---|---|---|---|
| Type | In | $I_3$ | N (20kA) | S (25kA) | H (35kA) | L (42kA) |
| TMA | 800 A (560...800 A) | 8000 A (4000...8000 A) | T6N800TW | T6S800TW | T6H800TW | T6L800TW |

### Tmax T6 800 A - FIXED (F) 3 poles - CSA C22.2 / UL listed (Discount DS-ST)
**Iu (40**°C) = 800 A - Front terminals (F)

| Electronic trip unit (AC only) - 600V AC | | Part number | | | |
|---|---|---|---|---|---|
| Type | In | N (20kA) | S (25kA) | H (35kA) | L (42kA) |
| PR221DS-LS/I | 800 A (320...800 A) | T6N800BW | T6S800BW | T6H800BW | T6L800BW |
| PR222DS-LSI | 800 A (320...800 A) | T6N800CW | T6S800CW | T6H800CW | T6L800CW |
| PR222DS-LSIG | 800 A (320...800 A) | T6N800EW | T6S800EW | T6H800EW | T6L800EW |

# Tmax molded case circuit breakers
## Power distribution circuit breakers

### Tmax T6 600 A - FIXED (F) 3 poles - 100% rated - CSA C22.2 / UL listed (Discount DS-ST)
**Iu (40**°C) = 600 A - Front terminals (F)

| Thermal-Magnetic trip unit - TMA - 600V AC / 600V DC | | | Part number | | | |
|---|---|---|---|---|---|---|
| Type | In | $I_3$ | NQ (20kA) | SQ (25kA) | HQ (35kA) | LQ (42kA) |
| TMA | 600 A (420...600 A) | 6000 A (3000...6000 A) | T6NQ600TW | T6SQ600TW | T6HQ600TW | T6LQ600TW |

### Tmax T6 600 A - FIXED (F) 3 poles - 100% rated - CSA C22.2 / UL listed (Discount DS-ST)
**Iu (40**°C) = 600 A - Front terminals (F)

| Electronic trip unit (AC only) - 600V AC | | Part number | | | |
|---|---|---|---|---|---|
| Type | In | NQ (20kA) | SQ (25kA) | HQ (35kA) | LQ (42kA) |
| PR221DS-LS/I | 600 A (240...600 A) | T6NQ600BW | T6SQ600BW | T6HQ600BW | T6LQ600BW |
| PR222DS-LSI | 600 A (240...600 A) | T6NQ600CW | T6SQ600CW | T6HQ600CW | T6LQ600CW |
| PR222DS-LSIG | 600 A (240...600 A) | T6NQ600EW | T6SQ600EW | T6HQ600EW | T6LQ600EW |

### Tmax T6 800 A - FIXED (F) 3 poles - 100% rated - CSA C22.2 / UL listed (Discount DS-ST)
**Iu (40**°C) = 800 A - Front terminals (F)

| Thermal-Magnetic trip unit - TMA - 600V AC / 600V DC | | | Part number | | | |
|---|---|---|---|---|---|---|
| Type | In | $I_3$ | NQ (20kA) | SQ (25kA) | HQ (35kA) | LQ (42kA) |
| TMA | 800 A (560...800 A) | 8000 A (4000...8000 A) | T6NQ800TW | T6SQ800TW | T6HQ800TW | T6LQ800TW |

### Tmax T6 800 A - FIXED (F) 3 poles - 100% rated - CSA C22.2 / UL listed (Discount DS-ST)
**Iu (40**°C) = 800 A - Front terminals (F)

| Electronic trip unit (AC only) - 600V AC | | Part number | | | |
|---|---|---|---|---|---|
| Type | In | NQ (20kA) | SQ (25kA) | HQ (35kA) | LQ (42kA) |
| PR221DS-LS/I | 800 A (320...800 A) | T6NQ800BW | T6SQ800BW | T6HQ800BW | T6LQ800BW |
| PR222DS-LSI | 800 A (320...800 A) | T6NQ800CW | T6SQ800CW | T6HQ800CW | T6LQ800CW |
| PR222DS-LSIG | 800 A (320...800 A) | T6NQ800EW | T6SQ800EW | T6HQ800EW | T6LQ800EW |

# Tmax molded case circuit breakers
## Power distribution circuit breakers

### Tmax T6 600 A - FIXED (F) 4 poles - CSA C22.2 / UL listed (Discount DS-ST)
**Iu (40**°C) = 600 A - Front terminals (F)

| Thermal-Magnetic trip unit - TMA - 600V AC / 600V DC | | | Part number | |
|---|---|---|---|---|
| Type | In | $I_3$ | N (20kA) | H (35kA) |
| TMA | 600 A (420...600 A) | 6000 A (3000...6000 A) | T6N600TW-4 | T6H600TW-4 |

### Tmax T6 600 A - FIXED (F) 4 poles - CSA C22.2 / UL listed (Discount DS-ST)
**Iu (40**°C) = 600 A - Front terminals (F)

| Electronic trip unit (AC only) - 600V AC | | Part number | |
|---|---|---|---|
| Type | In | N (20kA) | H (35kA) |
| PR221DS-LS/I | 600 A (240...600 A) | T6N600BW-4 | T6H600BW-4 |
| PR222DS-LSI | 600 A (240...600 A) | T6N600CW-4 | T6H600CW-4 |
| PR222DS-LSIG | 600 A (240...600 A) | T6N600EW-4 | T6H600EW-4 |

### Tmax T6 800 A - FIXED (F) 4 poles - CSA C22.2 / UL listed (Discount DS-ST)
**Iu (40**°C) = 800 A - Front terminals (F)

| Thermal-Magnetic trip unit - TMA - 600V AC / 600V DC | | | Part number | |
|---|---|---|---|---|
| Type | In | $I_3$ | N (20kA) | H (35kA) |
| TMA | 800 A (560...800 A) | 8000 A (4000...8000 A) | T6N800TW-4 | T6H800TW-4 |

### Tmax T6 800 A - FIXED (F) 4 poles - CSA C22.2 / UL listed (Discount DS-ST)
**Iu (40**°C) = 800 A - Front terminals (F)

| Electronic trip unit (AC only) - 600V AC | | Part number | |
|---|---|---|---|
| Type | In | N (20kA) | H (35kA) |
| PR221DS-LS/I | 800 A (320...800 A) | T6N800BW-4 | T6H800BW-4 |
| PR222DS-LSI | 800 A (320...800 A) | T6N800CW-4 | T6H800CW-4 |
| PR222DS-LSIG | 800 A (320...800 A) | T6N800EW-4 | T6H800EW-4 |

# Tmax molded case circuit breakers
## Power distribution circuit breakers

### Tmax T7 1000 A - FIXED (F) 3 poles - CSA C22.2 / UL listed (Discount DS-ST)
**Iu (40**°C) = 1000 A - Front terminals (F)

| Electronic trip unit (AC only) - 600V AC | | Part number | | |
|---|---|---|---|---|
| Type | In | S (25kA) | H (50kA) | L (65kA) |
| PR231/P-LS/I | 1000 A (400...1000 A) | T7S1000BW | T7H1000BW | T7L1000BW |
| PR232/P-LSI | 1000 A (400...1000 A) | T7S1000CW | T7H1000CW | T7L1000CW |
| PR331/P-LSIG | 1000 A (400...1000 A) | T7S1000EW | T7H1000EW | T7L1000EW |
| PR332/P-LI | 1000 A (400...1000 A) | T7S1000PW | T7H1000PW | T7L1000PW |
| PR332/P/LSI | 1000 A (400...1000 A) | T7S1000RW | T7H1000RW | T7L1000RW |
| PR332/P-LSIG | 1000 A (400...1000 A) | T7S1000SW | T7H1000SW | T7L1000SW |

### Tmax T7 1000 A - FIXED (F) 3 poles - 100% rated - CSA C22.2 / UL listed (Discount DS-ST)
**Iu (40**°C) = 1000 A - Front terminals (F)

| Electronic trip unit (AC only) - 600V AC | | Part number | | |
|---|---|---|---|---|
| Type | In | SQ (25kA) | HQ (50kA) | LQ (65kA) |
| PR231/P-LS/I | 1000 A (400...1000 A) | T7SQ1000BW | T7HQ1000BW | T7LQ1000BW |
| PR232/P-LSI | 1000 A (400...1000 A) | T7SQ1000CW | T7HQ1000CW | T7LQ1000CW |
| PR331/P-LSIG | 1000 A (400...1000 A) | T7SQ1000EW | T7HQ1000EW | T7LQ1000EW |
| PR332/P-LI | 1000 A (400...1000 A) | T7SQ1000PW | T7HQ1000PW | T7LQ1000PW |
| PR332/P/LSI | 1000 A (400...1000 A) | T7SQ1000RW | T7HQ1000RW | T7LQ1000RW |
| PR332/P-LSIG | 1000 A (400...1000 A) | T7SQ1000SW | T7HQ1000SW | T7LQ1000SW |

### Tmax T7 1000 A - FIXED (F) 4 poles - CSA C22.2 / UL listed (Discount DS-ST)
**Iu (40**°C) = 1000 A - Front terminals (F)

| Electronic trip unit (AC only) - 600V AC | | Part number | | |
|---|---|---|---|---|
| Type | In | S (25kA) | H (50kA) | L (65kA) |
| PR231/P-LS/I | 1000 A (400...1000 A) | T7S1000BW-4 | T7H1000BW-4 | T7L1000BW-4 |
| PR232/P-LSI | 1000 A (400...1000 A) | T7S1000CW-4 | T7H1000CW-4 | T7L1000CW-4 |
| PR331/P-LSIG | 1000 A (400...1000 A) | T7S1000EW-4 | T7H1000EW-4 | T7L1000EW-4 |
| PR332/P-LI | 1000 A (400...1000 A) | T7S1000PW-4 | T7H1000PW-4 | T7L1000PW-4 |
| PR332/P/LSI | 1000 A (400...1000 A) | T7S1000RW-4 | T7H1000RW-4 | T7L1000RW-4 |
| PR332/P-LSIG | 1000 A (400...1000 A) | T7S1000SW-4 | T7H1000SW-4 | T7L1000SW-4 |

# Tmax molded case circuit breakers
## Power distribution circuit breakers

### Tmax T7 1200 A - FIXED (F) 3 poles - CSA C22.2 / UL listed (Discount DS-ST)
**Iu (40**°C) = 1200 A - Front terminals (F)

| Electronic trip unit (AC only) - 600V AC | | Part number | | |
|---|---|---|---|---|
| Type | In | S (25kA) | H (50kA) | L (65kA) |
| PR231/P-LS/I | 1200 A (480...1200 A) | T7S1200BW | T7H1200BW | T7L1200BW |
| PR232/P-LSI | 1200 A (480...1200 A) | T7S1200CW | T7H1200CW | T7L1200CW |
| PR331/P-LSIG | 1200 A (480...1200 A) | T7S1200EW | T7H1200EW | T7L1200EW |
| PR332/P-LI | 1200 A (480...1200 A) | T7S1200PW | T7H1200PW | T7L1200PW |
| PR332/P/LSI | 1200 A (480...1200 A) | T7S1200RW | T7H1200RW | T7L1200RW |
| PR332/P-LSIG | 1200 A (480...1200 A) | T7S1200SW | T7H1200SW | T7L1200SW |

### Tmax T7 1200 A - FIXED (F) 3 poles - 100% rated - CSA C22.2 / UL listed (Discount DS-ST)
**Iu (40**°C) = 1200 A - Front terminals (F)

| Electronic trip unit (AC only) - 600V AC | | Part number | | |
|---|---|---|---|---|
| Type | In | SQ (25kA) | HQ (50kA) | LQ (65kA) |
| PR231/P-LS/I | 1200 A (480...1200 A) | T7SQ1200BW | T7HQ1200BW | T7LQ1200BW |
| PR232/P-LSI | 1200 A (480...1200 A) | T7SQ1200CW | T7HQ1200CW | T7LQ1200CW |
| PR331/P-LSIG | 1200 A (480...1200 A) | T7SQ1200EW | T7HQ1200EW | T7LQ1200EW |
| PR332/P-LI | 1200 A (480...1200 A) | T7SQ1200PW | T7HQ1200PW | T7LQ1200PW |
| PR332/P/LSI | 1200 A (480...1200 A) | T7SQ1200RW | T7HQ1200RW | T7LQ1200RW |
| PR332/P-LSIG | 1200 A (480...1200 A) | T7SQ1200SW | T7HQ1200SW | T7LQ1200SW |

### Tmax T7 1200 A - FIXED (F) 4 poles - CSA C22.2 / UL listed (Discount DS-ST)
**Iu (40**°C) = 1200 A - Front terminals (F)

| Electronic trip unit (AC only) - 600V AC | | Part number | | |
|---|---|---|---|---|
| Type | In | S (25kA) | H (50kA) | L (65kA) |
| PR231/P-LS/I | 1200 A (480...1200 A) | T7S1200BW-4 | T7H1200BW-4 | T7L1200BW-4 |
| PR232/P-LSI | 1200 A (480...1200 A) | T7S1200CW-4 | T7H1200CW-4 | T7L1200CW-4 |
| PR331/P-LSIG | 1200 A (480...1200 A) | T7S1200EW-4 | T7H1200EW-4 | T7L1200EW-4 |
| PR332/P-LI | 1200 A (480...1200 A) | T7S1200PW-4 | T7H1200PW-4 | T7L1200PW-4 |
| PR332/P/LSI | 1200 A (480...1200 A) | T7S1200RW-4 | T7H1200RW-4 | T7L1200RW-4 |
| PR332/P-LSIG | 1200 A (480...1200 A) | T7S1200SW-4 | T7H1200SW-4 | T7L1200SW-4 |

# Tmax molded case circuit breakers
## Power distribution circuit breakers

### Tmax T7M 1000 A - FIXED (F) 3 poles - CSA C22.2 / UL listed (Discount DS-ST)
**Iu (40**°C) = 1000 A - Front terminals (F)

| Electronic trip unit (AC only) - 600V AC | | Part number | | |
|---|---|---|---|---|
| Type | In | S (25kA) | H (50kA) | L (65kA) |
| PR231/P-LS/I | 1000 A (400...1000 A) | T7MS1000BW | T7MH1000BW | T7ML1000BW |
| PR232/P-LSI | 1000 A (400...1000 A) | T7MS1000CW | T7MH1000CW | T7ML1000CW |
| PR331/P-LSIG | 1000 A (400...1000 A) | T7MS1000EW | T7MH1000EW | T7ML1000EW |
| PR332/P-LI | 1000 A (400...1000 A) | T7MS1000PW | T7MH1000PW | T7ML1000PW |
| PR332/P/LSI | 1000 A (400...1000 A) | T7MS1000RW | T7MH1000RW | T7ML1000RW |
| PR332/P-LSIG | 1000 A (400...1000 A) | T7MS1000SW | T7MH1000SW | T7ML1000SW |

### Tmax T7M 1000 A - FIXED (F) 3 poles - 100% rated - CSA C22.2 / UL listed (Discount DS-ST)
**Iu (40**°C) = 1000 A - Front terminals (F)

| Electronic trip unit (AC only) - 600V AC | | Part number | | |
|---|---|---|---|---|
| Type | In | SQ (25kA) | HQ (50kA) | LQ (65kA) |
| PR231/P-LS/I | 1000 A (400...1000 A) | T7MSQ1000BW | T7MHQ1000BW | T7MLQ1000BW |
| PR232/P-LSI | 1000 A (400...1000 A) | T7MSQ1000CW | T7MHQ1000CW | T7MLQ1000CW |
| PR331/P-LSIG | 1000 A (400...1000 A) | T7MSQ1000EW | T7MHQ1000EW | T7MLQ1000EW |
| PR332/P-LI | 1000 A (400...1000 A) | T7MSQ1000PW | T7MHQ1000PW | T7MLQ1000PW |
| PR332/P/LSI | 1000 A (400...1000 A) | T7MSQ1000RW | T7MHQ1000RW | T7MLQ1000RW |
| PR332/P-LSIG | 1000 A (400...1000 A) | T7MSQ1000SW | T7MHQ1000SW | T7MLQ1000SW |

### Tmax T7M 1000 A - FIXED (F) 4 poles - CSA C22.2 / UL listed (Discount DS-ST)
**Iu (40**°C) = 1000 A - Front terminals (F)

| Electronic trip unit (AC only) - 600V AC | | Part number | | |
|---|---|---|---|---|
| Type | In | S (25kA) | H (50kA) | L (65kA) |
| PR231/P-LS/I | 1000 A (400...1000 A) | T7MS1000BW-4 | T7MH1000BW-4 | T7ML1000BW-4 |
| PR232/P-LSI | 1000 A (400...1000 A) | T7MS1000CW-4 | T7MH1000CW-4 | T7ML1000CW-4 |
| PR331/P-LSIG | 1000 A (400...1000 A) | T7MS1000EW-4 | T7MH1000EW-4 | T7ML1000EW-4 |
| PR332/P-LI | 1000 A (400...1000 A) | T7MS1000PW-4 | T7MH1000PW-4 | T7ML1000PW-4 |
| PR332/P/LSI | 1000 A (400...1000 A) | T7MS1000RW-4 | T7MH1000RW-4 | T7ML1000RW-4 |
| PR332/P-LSIG | 1000 A (400...1000 A) | T7MS1000SW-4 | T7MH1000SW-4 | T7ML1000SW-4 |

# Tmax molded case circuit breakers
## Power distribution circuit breakers

### Tmax T7M 1200 A - FIXED (F) 3 poles - CSA C22.2 / UL listed (Discount DS-ST)
**Iu (40**°C) = 1200 A - Front terminals (F)

| Electronic trip unit (AC only) - 600V AC | | Part number | | |
|---|---|---|---|---|
| Type | In | S (25kA) | H (50kA) | L (65kA) |
| PR231/P-LS/I | 1200 A (480...1200 A) | T7MS1200BW | T7MH1200BW | T7ML1200BW |
| PR232/P-LSI | 1200 A (480...1200 A) | T7MS1200CW | T7MH1200CW | T7ML1200CW |
| PR331/P-LSIG | 1200 A (480...1200 A) | T7MS1200EW | T7MH1200EW | T7ML1200EW |
| PR332/P-LI | 1200 A (480...1200 A) | T7MS1200PW | T7MH1200PW | T7ML1200PW |
| PR332/P/LSI | 1200 A (480...1200 A) | T7MS1200RW | T7MH1200RW | T7ML1200RW |
| PR332/P-LSIG | 1200 A (480...1200 A) | T7MS1200SW | T7MH1200SW | T7ML1200SW |

### Tmax T7M 1200 A - FIXED (F) 3 poles - 100% rated - CSA C22.2 / UL listed (Discount DS-ST)
**Iu (40**°C) = 1200 A - Front terminals (F)

| Electronic trip unit (AC only) - 600V AC | | Part number | | |
|---|---|---|---|---|
| Type | In | SQ (25kA) | HQ (50kA) | LQ (65kA) |
| PR231/P-LS/I | 1200 A (480...1200 A) | T7MSQ1200BW | T7MHQ1200BW | T7MLQ1200BW |
| PR232/P-LSI | 1200 A (480...1200 A) | T7MSQ1200CW | T7MHQ1200CW | T7MLQ1200CW |
| PR331/P-LSIG | 1200 A (480...1200 A) | T7MSQ1200EW | T7MHQ1200EW | T7MLQ1200EW |
| PR332/P-LI | 1200 A (480...1200 A) | T7MSQ1200PW | T7MHQ1200PW | T7MLQ1200PW |
| PR332/P/LSI | 1200 A (480...1200 A) | T7MSQ1200RW | T7MHQ1200RW | T7MLQ1200RW |
| PR332/P-LSIG | 1200 A (480...1200 A) | T7MSQ1200SW | T7MHQ1200SW | T7MLQ1200SW |

### Tmax T7M 1200 A - FIXED (F) 4 poles - CSA C22.2 / UL listed (Discount DS-ST)
**Iu (40**°C) = 1200 A - Front terminals (F)

| Electronic trip unit (AC only) - 600V AC | | Part number | | |
|---|---|---|---|---|
| Type | In | S (25kA) | H (50kA) | L (65kA) |
| PR231/P-LS/I | 1200 A (480...1200 A) | T7MS1200BW-4 | T7MH1200BW-4 | T7ML1200BW-4 |
| PR232/P-LSI | 1200 A (480...1200 A) | T7MS1200CW-4 | T7MH1200CW-4 | T7ML1200CW-4 |
| PR331/P-LSIG | 1200 A (480...1200 A) | T7MS1200EW-4 | T7MH1200EW-4 | T7ML1200EW-4 |
| PR332/P-LI | 1200 A (480...1200 A) | T7MS1200PW-4 | T7MH1200PW-4 | T7ML1200PW-4 |
| PR332/P/LSI | 1200 A (480...1200 A) | T7MS1200RW-4 | T7MH1200RW-4 | T7ML1200RW-4 |
| PR332/P-LSIG | 1200 A (480...1200 A) | T7MS1200SW-4 | T7MH1200SW-4 | T7ML1200SW-4 |

# Tmax molded case circuit breakers
## Power distribution circuit breakers

### Tmax T8 1600 A - FIXED (F) 3 poles - CSA C22.2 / UL listed (Discount DS-ST8)
**Iu (40**°C) = 1600 A - Front terminals (F)

| Electronic trip unit (AC only) - 600V AC | | Part number |
|---|---|---|
| Type | In | V (100kA) |
| PR331/P-LSI | 1600 A (640...1600 A) | T8V16CW |
| PR331/P-LSIG | 1600 A (640...1600 A) | T8V16EW |
| PR332/P-LI | 1600 A (640...1600 A) | T8V16PW |
| PR332/P/LSI | 1600 A (640...1600 A) | T8V16RW |
| PR332/P-LSIG | 1600 A (640...1600 A) | T8V16SW |

### Tmax T8 2000 A - FIXED (F) 3 poles - CSA C22.2 / UL listed (Discount DS-ST8)
**Iu (40**°C) = 2000 A - Front terminals (F)

| Electronic trip unit (AC only) - 600V AC | | Part number |
|---|---|---|
| Type | In | V (100kA) |
| PR331/P-LSI | 2000 A (800...2000 A) | T8V20CW |
| PR331/P-LSIG | 2000 A (800...2000 A) | T8V20EW |
| PR332/P-LI | 2000 A (800...2000 A) | T8V20PW |
| PR332/P/LSI | 2000 A (800...2000 A) | T8V20RW |
| PR332/P-LSIG | 2000 A (800...2000 A) | T8V20SW |

### Tmax T8 2500 A - FIXED (F) 3 poles - CSA C22.2 / UL listed (Discount DS-ST8)
**Iu (40**°C) = 2500 A - Front terminals (F)

| Electronic trip unit (AC only) - 600V AC | | Part number |
|---|---|---|
| Type | In | V (100kA) |
| PR331/P-LSI | 2500 A (1000...2500 A) | T8V25CW |
| PR331/P-LSIG | 2500 A (1000...2500 A) | T8V25EW |
| PR332/P-LI | 2500 A (1000...2500 A) | T8V25PW |
| PR332/P/LSI | 2500 A (1000...2500 A) | T8V25RW |
| PR332/P-LSIG | 2500 A (1000...2500 A) | T8V25SW |

### Tmax T8 3000 A - FIXED (F) 3 poles - CSA C22.2 / UL listed (Discount DS-ST8)
**Iu (40**°C) = 3000 A - Front terminals (F)

| Electronic trip unit (AC only) - 600V AC | | Part number |
|---|---|---|
| Type | In | V (100kA) |
| PR331/P-LSI | 3000 A (1200...3000 A) | T8V30CW |
| PR331/P-LSIG | 3000 A (1200...3000 A) | T8V30EW |
| PR332/P-LI | 3000 A (1200...3000 A) | T8V30PW |
| PR332/P/LSI | 3000 A (1200...3000 A) | T8V30RW |
| PR332/P-LSIG | 3000 A (1200...3000 A) | T8V30SW |

# Tmax molded case circuit breakers
## Power distribution circuit breakers

### Tmax T8 1600 A - FIXED (F) 3 poles - 100% rated - CSA C22.2 / UL listed (Discount DS-ST8)
**Iu (40**°C) = 1600 A - Front terminals (F)

| Electronic trip unit (AC only) - 600V AC | | Part number |
|---|---|---|
| Type | In | VQ (100kA) |
| PR331/P-LSI | 1600 A (640...1600 A) | T8VQ16CW |
| PR331/P-LSIG | 1600 A (640...1600 A) | T8VQ16EW |
| PR332/P-LI | 1600 A (640...1600 A) | T8VQ16PW |
| PR332/P/LSI | 1600 A (640...1600 A) | T8VQ16RW |
| PR332/P-LSIG | 1600 A (640...1600 A) | T8VQ16SW |

### Tmax T8 2000 A - FIXED (F) 3 poles - 100% rated - CSA C22.2 / UL listed (Discount DS-ST8)
**Iu (40**°C) = 2000 A - Front terminals (F)

| Electronic trip unit (AC only) - 600V AC | | Part number |
|---|---|---|
| Type | In | VQ (100kA) |
| PR331/P-LSI | 2000 A (800...2000 A) | T8VQ20CW |
| PR331/P-LSIG | 2000 A (800...2000 A) | T8VQ20EW |
| PR332/P-LI | 2000 A (800...2000 A) | T8VQ20PW |
| PR332/P/LSI | 2000 A (800...2000 A) | T8VQ20RW |
| PR332/P-LSIG | 2000 A (800...2000 A) | T8VQ20SW |

### Tmax T8 2500 A - FIXED (F) 3 poles - 100% rated - CSA C22.2 / UL listed (Discount DS-ST8)
**Iu (40**°C) = 2500 A - Rear vertical terminals (VR)

| Electronic trip unit (AC only) - 600V AC | | Part number |
|---|---|---|
| Type | In | VQ (100kA) |
| PR331/P-LSI | 2500 A (1000...2500 A) | T8VQ25CW |
| PR331/P-LSIG | 2500 A (1000...2500 A) | T8VQ25EW |
| PR332/P-LI | 2500 A (1000...2500 A) | T8VQ25PW |
| PR332/P/LSI | 2500 A (1000...2500 A) | T8VQ25RW |
| PR332/P-LSIG | 2500 A (1000...2500 A) | T8VQ25SW |

### Tmax T8 3000 A - FIXED (F) 3 poles - 100% rated - CSA C22.2 / UL listed (Discount DS-ST8)
**Iu (40**°C) = 3000 A - Rear vertical terminals (VR)

| Electronic trip unit (AC only) - 600V AC | | Part number |
|---|---|---|
| Type | In | VQ (100kA) |
| PR331/P-LSI | 3000 A (1200...3000 A) | T8VQ30CW |
| PR331/P-LSIG | 3000 A (1200...3000 A) | T8VQ30EW |
| PR332/P-LI | 3000 A (1200...3000 A) | T8VQ30PW |
| PR332/P/LSI | 3000 A (1200...3000 A) | T8VQ30RW |
| PR332/P-LSIG | 3000 A (1200...3000 A) | T8VQ30SW |

# Tmax molded case circuit breakers
## Power distribution circuit breakers

### Tmax T8 1600 A - FIXED (F) 4 poles - CSA C22.2 / UL listed (Discount DS-ST8)
**Iu (40**°C) = 1600 A - Front terminals (F)

| Electronic trip unit (AC only) - 600V AC | | Part number |
|---|---|---|
| Type | In | V (100kA) |
| PR331/P-LSI | 1600 A (640...1600 A) | T8V16CW-4 |
| PR331/P-LSIG | 1600 A (640...1600 A) | T8V16EW-4 |
| PR332/P-LI | 1600 A (640...1600 A) | T8V16PW-4 |
| PR332/P/LSI | 1600 A (640...1600 A) | T8V16RW-4 |
| PR332/P-LSIG | 1600 A (640...1600 A) | T8V16SW-4 |

### Tmax T8 2000 A - FIXED (F) 4 poles - CSA C22.2 / UL listed (Discount DS-ST8)
**Iu (40**°C) = 2000 A - Front terminals (F)

| Electronic trip unit (AC only) - 600V AC | | Part number |
|---|---|---|
| Type | In | V (100kA) |
| PR331/P-LSI | 2000 A (800...2000 A) | T8V20CW-4 |
| PR331/P-LSIG | 2000 A (800...2000 A) | T8V20EW-4 |
| PR332/P-LI | 2000 A (800...2000 A) | T8V20PW-4 |
| PR332/P/LSI | 2000 A (800...2000 A) | T8V20RW-4 |
| PR332/P-LSIG | 2000 A (800...2000 A) | T8V20SW-4 |

### Tmax T8 2500 A - FIXED (F) 4 poles - CSA C22.2 / UL listed (Discount DS-ST8)
**Iu (40**°C) = 2500 A - Front terminals (F)

| Electronic trip unit (AC only) - 600V AC | | Part number |
|---|---|---|
| Type | In | V (100kA) |
| PR331/P-LSI | 2500 A (1000...2500 A) | T8V25CW-4 |
| PR331/P-LSIG | 2500 A (1000...2500 A) | T8V25EW-4 |
| PR332/P-LI | 2500 A (1000...2500 A) | T8V25PW-4 |
| PR332/P/LSI | 2500 A (1000...2500 A) | T8V25RW-4 |
| PR332/P-LSIG | 2500 A (1000...2500 A) | T8V25SW-4 |

### Tmax T8 3000 A - FIXED (F) 4 poles - CSA C22.2 / UL listed (Discount DS-ST8)
**Iu (40**°C) = 3000 A - Front terminals (F)

| Electronic trip unit (AC only) - 600V AC | | Part number |
|---|---|---|
| Type | In | V (100kA) |
| PR331/P-LSI | 3000 A (1200...3000 A) | T8V30CW-4 |
| PR331/P-LSIG | 3000 A (1200...3000 A) | T8V30EW-4 |
| PR332/P-LI | 3000 A (1200...3000 A) | T8V30PW-4 |
| PR332/P/LSI | 3000 A (1200...3000 A) | T8V30RW-4 |
| PR332/P-LSIG | 3000 A (1200...3000 A) | T8V30SW-4 |

# Tmax molded case circuit breakers
## Motor control protection circuit breakers

### Tmax T2 100 A - FIXED (F) 3 poles - CSA C22.2 / UL listed (Discount DS-ST)
**Iu (40**°C) = 100 A - Front terminals (F)

| Magnetic only trip unit - MA - 480V AC | | | Part number | |
|---|---|---|---|---|
| Type | In | $I_3$ | S (35kA) | H (65kA) |
| MA | 20 A | 240 A (120...240 A) | T2S020MW | T2H020MW |
| MA | 50 A | 600 A (300...600 A) | T2S050MW | T2H050MW |
| MA | 100 A | 1200 A (600...1200 A) | T2S100MW | T2H100MW |

### Tmax T2 100 A - FIXED (F) 3 poles - CSA C22.2 / UL listed (Discount DS-ST)
**Iu (40**°C) = 100 A - Front terminals (F)

| Instantaneous only electronic trip unit - 480V AC | | | Part number | |
|---|---|---|---|---|
| Type | In | $I_3$ | S (35kA) | H (65kA) |
| PR221DS-I | 25 A | 250 A (25...250 A) | T2S020E5W | T2H020E5W |
| PR221DS-I | 60 A | 600 A (60...600 A) | T2S050E5W | T2H050E5W |
| PR221DS-I | 100 A | 1000 A (100...1000 A) | T2S100E5W | T2H100E5W |

### Tmax T3 225 A - FIXED (F) 3 poles - CSA C22.2 / UL listed (Discount DS-ST)
**Iu (40**°C) = 225 A - Front terminals (F)

| Magnetic only trip unit - MA - 480V AC / 500V DC | | | Part number |
|---|---|---|---|
| Type | In | $I_3$ | S (35kA) |
| MA | 100 A | 1200 A (600...1200 A) | T3S100MW |
| MA | 125 A | 1500 A (750...1500 A) | T3S125MW |
| MA | 150 A | 1800 A (900...1800 A) | T3S150MW |
| MA | 200 A | 2400 A (1200...2400 A) | T3S200MW |

### Tmax Ts3 150 A - FIXED (F) 3 poles - CSA C22.2 / UL listed (Discount DS-ST)
**Iu (40**°C) = 150 A - Front terminals (F)

| Magnetic only trip unit - MA - 600V AC / 600V DC | | | Part number | |
|---|---|---|---|---|
| Type | In | $I_3$ | L (10kA) | L (25kA) |
| MA | 3 A | 36 A (12...36 A) | Ts3L003MW | - |
| MA | 5 A | 60 A (20...60 A) | Ts3L005MW | - |
| MA | 10 A | 120 A (40...120 A) | Ts3L010MW | - |
| MA | 25 A | 300 A (100...300 A) | Ts3L025MW | - |
| MA | 50 A | 600 A (200...600 A) | - | Ts3L050MW |
| MA | 100 A | 1200 A (400...1200 A) | - | Ts3L100MW |
| MA | 125 A | 1500 A (500...1500 A) | - | Ts3L125MW |
| MA | 150 A | 1800 A (600...1800 A) | - | Ts3L150MW |

### Tmax Ts3 225 A - FIXED (F) 3 poles - CSA C22.2 / UL listed (Discount DS-ST)
**Iu (40**°C) = 225 A - Front terminals (F)

| Magnetic only trip unit - MA - 480V AC / 500V DC | | | Part number |
|---|---|---|---|
| Type | In | $I_3$ | L (65kA) |
| MA | 175 A | 2100 A (700...2100 A) | Ts3L175MW |
| MA | 225 A | 2400 A (800...2400 A) | Ts3L225MW |

# Tmax molded case circuit breakers
## Motor control protection circuit breakers

### Tmax T4 250 A - FIXED (F) 3 poles - CSA C22.2 / UL listed (Discount DS-ST)
**Iu (40**°C) = 250 A - Front terminals (F)

| Instantaneous only electronic trip unit - 600V AC | | | Part number | | | |
|---|---|---|---|---|---|---|
| Type | In | $I_3$ | N (18kA) | S (25kA) | H (35kA) | L (65kA) |
| PR221DS-I | 100 A | 1000 A (100...1000 A) | T4N100E5W | T4S100E5W | T4H100E5W | T4L100E5W |
| PR221DS-I | 150 A | 1500 A (150...1500 A) | T4N150E5W | T4S150E5W | T4H150E5W | T4L150E5W |
| PR221DS-I | 250 A | 2500 A (250...2500 A) | T4N250E5W | T4S250E5W | T4H250E5W | T4L250E5W |

### Tmax T5 400 A - FIXED (F) 3 poles - CSA C22.2 / UL listed (Discount DS-ST)
**Iu (40**°C) = 400 A - Front terminals (F)

| Instantaneous only electronic trip unit - 600V AC | | | Part number | | | |
|---|---|---|---|---|---|---|
| Type | In | $I_3$ | N (18kA) | S (25kA) | H (35kA) | L (65kA) |
| PR221DS-I | 300 A | 3000 A (300...3000 A) | T5N300E5W | T5S300E5W | T5H300E5W | T5L300E5W |
| PR221DS-I | 400 A | 4000 A (400...4000 A) | T5N400E5W | T5S400E5W | T5H400E5W | T5L400E5W |

### Tmax T5 600 A - FIXED (F) 3 poles - CSA C22.2 / UL listed (Discount DS-ST)
**Iu (40**°C) = 600 A - Front terminals (F)

| Instantaneous only electronic trip unit - 600V AC | | | Part number | | | |
|---|---|---|---|---|---|---|
| Type | In | $I_3$ | N (18kA) | S (25kA) | H (35kA) | L (65kA) |
| PR221DS-I | 600 A | 6000 A (600...6000 A) | T5N600E5W | T5S600E5W | T5H600E5W | T5L600E5W |

### Tmax T6 800 A - FIXED (F) 3 poles - CSA C22.2 / UL listed (Discount DS-ST)
**Iu (40**°C) = 800 A - Front terminals (F)

| Instantaneous only electronic trip unit - 600V AC | | | Part number | | | |
|---|---|---|---|---|---|---|
| Type | In | $I_3$ | N (20kA) | S (25kA) | H (35kA) | L (42kA) |
| PR221DS-I | 600 A | 6000 A (600...6000 A) | T6N600E5W | T6S600E5W | T6H600E5W | T6L600E5W |
| PR221DS-I | 800 A | 8000 A (800...8000 A) | T6N800E5W | T6S800E5W | T6H800E5W | T6L800E5W |

# Tmax molded case circuit breakers
## Molded case switch

### Tmax T1 100 A - FIXED (F) 3 poles - CSA C22.2 / UL listed (Discount DS-ST)
**Iu (40**°C) = 100 A - Front terminals for copper/aluminium cables (FC CuAl)

| Molded case switch - 347V AC / 500V DC | | | Part number |
|---|---|---|---|
| Type | In | $I_3$ | N (2kA) |
| MS | 100 A | 1000 A (1) | T1N100DL |

(1) Magnetic override

### Tmax T1 100 A - FIXED (F) 4 poles - CSA C22.2 / UL listed (Discount DS-ST)
**Iu (40**°C) = 100 A - Front terminals for copper/aluminium cables (FC CuAl)

| Molded case switch - 347V AC / 500V DC | | | Part number |
|---|---|---|---|
| Type | In | $I_3$ | N (2kA) |
| MS | 100 A | 1000 A (1) | T1N100DL-4 |

(1) Magnetic override

### Tmax T3 225 A - FIXED (F) 3 poles - CSA C22.2 / UL listed (Discount DS-ST)
**Iu (40**°C) = 225 A - Front terminals (F)

| Molded case switch - 347V AC / 500V DC | | | Part number |
|---|---|---|---|
| Type | In | $I_3$ | S (3.6kA) |
| MS | 150 A | 1500 A (1) | T3S150DW |
| MS | 225 A | 2250 A (1) | T3S225DW |

(1) Magnetic override

### Tmax T3 225 A - FIXED (F) 4 poles - CSA C22.2 / UL listed (Discount DS-ST)
**Iu (40**°C) = 225 A - Front terminals (F)

| Molded case switch - 347V AC / 500V DC | | | Part number |
|---|---|---|---|
| Type | In | $I_3$ | S (3.6kA) |
| MS | 150 A | 1500 A (1) | T3S150DW-4 |
| MS | 225 A | 2250 A (1) | T3S225DW-4 |

(1) Magnetic override

# Tmax molded case circuit breakers
## Molded case switch

### Tmax Ts3 150 A - FIXED (F) 3 poles - CSA C22.2 / UL listed (Discount DS-ST)
**Iu (40**°C) = 150 A - Front terminals (F)

| Molded case switch - 600V AC / 600V DC | | | Part number |
|---|---|---|---|
| Type | In | $I_3$ | H (6.5kA) |
| MS | 150 A | 1500 A (1) | Ts3H150DW |

(1) Magnetic override

### Tmax Ts3 150 A - FIXED (F) 4 poles - CSA C22.2 / UL listed (Discount DS-ST)
**Iu (40**°C) = 150 A - Front terminals (F)

| Molded case switch - 600V AC / 600V DC | | | Part number |
|---|---|---|---|
| Type | In | $I_3$ | H (6.5kA) |
| MS | 150 A | 1500 A (1) | Ts3H150DW-4 |

(1) Magnetic override

### Tmax Ts3 225 A - FIXED (F) 3 poles - CSA C22.2 / UL listed (Discount DS-ST)
**Iu (40**°C) = 225 A - Front terminals (F)

| Molded case switch - 480V AC / 500V DC | | | Part number |
|---|---|---|---|
| Type | In | $I_3$ | H (6.5kA) |
| MS | 225 A | 2250 A (1) | Ts3H225DW |

(1) Magnetic override

### Tmax Ts3 225 A - FIXED (F) 4 poles - CSA C22.2 / UL listed (Discount DS-ST)
**Iu (40**°C) = 225 A - Front terminals (F)

| Molded case switch - 480V AC / 500V DC | | | Part number |
|---|---|---|---|
| Type | In | $I_3$ | H (6.5kA) |
| MS | 225 A | 2250 A (1) | Ts3H225DW-4 |

(1) Magnetic override

### Tmax T4 250 A - FIXED (F) 3 poles - CSA C22.2 / UL listed (Discount DS-ST)
**Iu (40**°C) = 250 A - Front terminals (F)

| Molded case switch - 600V AC / 600V DC | | | Part number | | | | |
|---|---|---|---|---|---|---|---|
| Type | In | $I_3$ | N (3.6kA) | S (3.6kA) | H (3.6kA) | L (3.6kA) | V (3.6kA) |
| MS | 250 A | 3000 A (1) | T4N250DW | T4S250DW | T4H250DW | T4L250DW | T4V250DW |

(1) Magnetic override

### Tmax T4 250 A - FIXED (F) 4 poles - CSA C22.2 / UL listed (Discount DS-ST)
**Iu (40**°C) = 250 A - Front terminals (F)

| Molded case switch - 600V AC / 600V DC | | | Part number |
|---|---|---|---|
| Type | In | $I_3$ | H (3.6kA) |
| MS | 250 A | 3000 A (1) | T4H250DW-4 |

(1) Magnetic override

# Tmax molded case circuit breakers
## Molded case switch

### Tmax T5 400 A - FIXED (F) 3 poles - CSA C22.2 / UL listed (Discount DS-ST)
**Iu (40**°C) = 400 A - Front terminals (F)

| Molded case switch - 600V AC / 600V DC | | | Part number | | | | |
|---|---|---|---|---|---|---|---|
| Type | In | $I_3$ | N (6kA) | S (6kA) | H (6kA) | L (6kA) | V (6kA) |
| MS | 400 A | 5000 A (1) | T5N400DW | T5S400DW | T5H400DW | T5L400DW | T5V400DW |

(1) Magnetic override

### Tmax T5 400 A - FIXED (F) 4 poles - CSA C22.2 / UL listed (Discount DS-ST)
**Iu (40**°C) = 400 A - Front terminals (F)

| Molded case switch - 600V AC / 600V DC | | | Part number |
|---|---|---|---|
| Type | In | $I_3$ | H (6kA) |
| MS | 400 A | 5000 A (1) | T5H400DW-4 |

(1) Magnetic override

### Tmax T5 600 A - FIXED (F) 3 poles - CSA C22.2 / UL listed (Discount DS-ST)
**Iu (40**°C) = 600 A - Front terminals (F)

| Molded case switch - 600V AC / 600V DC | | | Part number | | | | |
|---|---|---|---|---|---|---|---|
| Type | In | $I_3$ | N (6kA) | S (6kA) | H (6kA) | L (6kA) | V (6kA) |
| MS | 600 A | 6000 A (1) | T5N600DW | T5S600DW | T5H600DW | T5L600DW | T5V600DW |

(1) Magnetic override

### Tmax T6 800 A - FIXED (F) 3 poles - CSA C22.2 / UL listed (Discount DS-ST)
**Iu (40**°C) = 800 A - Front terminals (F)

| Molded case switch - 600V AC / 600V DC | | | Part number |
|---|---|---|---|
| Type | In | $I_3$ | H (15kA) |
| MS | 800 A | 10000 A (1) | T6H800DW |

(1) Magnetic override

### Tmax T6 800 A - FIXED (F) 4 poles - CSA C22.2 / UL listed (Discount DS-ST)
**Iu (40**°C) = 800 A - Front terminals (F)

| Molded case switch - 600V AC / 600V DC | | | Part number |
|---|---|---|---|
| Type | In | $I_3$ | H (15kA) |
| MS | 800 A | 10000 A (1) | T6H800DW-4 |

(1) Magnetic override

# Tmax molded case circuit breakers
## Molded case switch

### Tmax T7 1200 A - FIXED (F) 3 poles - CSA C22.2 / UL listed (Discount DS-ST)
**Iu (40**°C) = 1200 A - Front terminals (F)

| Molded case switch - 600V AC / 600V DC | | | Part number |
|---|---|---|---|
| Type | In | $I_3$ | H (20kA) |
| MS (T7) | 1200 A | 12000 A (1) | T7H1200DW |
| MS (T7M) | 1200 A | 12000 A (1) | T7MH1200DW |

(1) Magnetic override

### Tmax T7 1200 A - FIXED (F) 4 poles - CSA C22.2 / UL listed (Discount DS-ST)
**Iu (40**°C) = 1200 A - Front terminals (F)

| Molded case switch - 600V AC / 600V DC | | | Part number |
|---|---|---|---|
| Type | In | $I_3$ | H (20kA) |
| MS (T7) | 1200 A | 12000 A (1) | T7H1200DW-4 |
| MS (T7M) | 1200 A | 12000 A (1) | T7MH1200DW-4 |

(1) Magnetic override

### Tmax T8 2000/2500/3000 A - FIXED (F) 3 poles - CSA C22.2 / UL listed (Discount DS-ST8)
**Iu (40**°C) = 2000/2500/3000 A - Front terminals (F)

| Molded case switch - 600V AC / 600V DC | | | Part number |
|---|---|---|---|
| Type | In | $I_3$ | V (40kA) |
| MS | 2000 A | 40000 A (1) | T8V20DW |
| MS | 2500 A | 40000 A (1) | T8V25DW |
| MS | 3000 A | 40000 A (1) | T8V30DW |

(1) Magnetic override

### Tmax T8 2000/2500/3000 A - FIXED (F) 4 poles - CSA C22.2 / UL listed (Discount DS-ST8)
**Iu (40**°C) = 2000/2500/3000 A - Front terminals (F)

| Molded case switch - 600V AC / 600V DC | | | Part number |
|---|---|---|---|
| Type | In | $I_3$ | V (40kA) |
| MS | 2000 A | 40000 A (1) | T8V20DW-4 |
| MS | 2500 A | 40000 A (1) | T8V25DW-4 |
| MS | 3000 A | 40000 A (1) | T8V30DW-4 |

(1) Magnetic override

# Tmax molded case circuit breakers
## Current limiting circuit breakers

### Tmax T2 100 A - FIXED (F) 3 poles - CSA C22.2 / UL listed (Discount DS-ST)
**Iu (40**°C) = 100 A - Front terminals (F)

| Thermal-Magnetic trip unit with fixed tresholds - 480V AC | | | Part number |
|---|---|---|---|
| Type | In | $I_3$ | H (65kA) |
| TMF | 15 A | 500 A | T2H015TW |
| TMF | 20 A | 500 A | T2H020TW |
| TMF | 25 A | 500 A | T2H025TW |
| TMF | 30 A | 500 A | T2H030TW |
| TMF | 40 A | 500 A | T2H040TW |
| TMF | 50 A | 500 A | T2H050TW |
| TMF | 60 A | 600 A | T2H060TW |
| TMF | 70 A | 700 A | T2H070TW |
| TMF | 80 A | 800 A | T2H080TW |
| TMF | 90 A | 900 A | T2H090TW |
| TMF | 100 A | 1000 A | T2H100TW |

### Tmax T2 100 A - FIXED (F) 3 poles - CSA C22.2 / UL listed (Discount DS-ST)
**Iu (40**°C) = 100 A - Front terminals (F)

| Electronic trip unit (AC only) - 480V AC | | Part number |
|---|---|---|
| Type | In | H (65kA) |
| PR221DS-LS/I | 25 A (10...25 A) | T2H025BW |
| PR221DS-LS/I | 60 A (24...60 A) | T2H060BW |
| PR221DS-LS/I | 100 A (40...100 A) | T2H100BW |

### Tmax T2 100 A - FIXED (F) 3 poles - 100% rated - CSA C22.2 / UL listed (Discount DS-ST)
**Iu (40**°C) = 100 A - Front terminals (F)

| Thermal-Magnetic trip unit with fixed tresholds - 480V AC | | | Part number |
|---|---|---|---|
| Type | In | $I_3$ | HQ (65kA) |
| TMF | 15 A | 500 A | T2HQ015TW |
| TMF | 20 A | 500 A | T2HQ020TW |
| TMF | 25 A | 500 A | T2HQ025TW |
| TMF | 30 A | 500 A | T2HQ030TW |
| TMF | 40 A | 500 A | T2HQ040TW |
| TMF | 50 A | 500 A | T2HQ050TW |
| TMF | 60 A | 600 A | T2HQ060TW |
| TMF | 70 A | 700 A | T2HQ070TW |
| TMF | 80 A | 800 A | T2HQ080TW |
| TMF | 90 A | 900 A | T2HQ090TW |
| TMF | 100 A | 1000 A | T2HQ100TW |

### Tmax T2 100 A - FIXED (F) 3 poles - 100% rated - CSA C22.2 / UL listed (Discount DS-ST)
**Iu (40**°C) = 100 A - Front terminals (F)

| Electronic trip unit (AC only) - 480V AC | | Part number |
|---|---|---|
| Type | In | HQ (65kA) |
| PR221DS-LS/I | 25 A (10...25 A) | T2HQ025BW |
| PR221DS-LS/I | 60 A (24...60 A) | T2HQ060BW |
| PR221DS-LS/I | 100 A (40...100 A) | T2HQ100BW |

# Tmax molded case circuit breakers
## Current limiting circuit breakers

### Tmax T4 250 A - FIXED (F) 3 poles - CSA C22.2 / UL listed (Discount DS-ST)
**Iu (40**°C) = 100 A - Front terminals (F)

| Thermal-Magnetic trip unit TMF/TMD/TMA - 600V AC / 600V DC | | | Part number | |
|---|---|---|---|---|
| Type | In | $I_3$ | H (35kA) | V (100kA) |
| TMF | 20 A | 500 A | T4H020TW | T4V020TW |
| TMD | 30 A (21...30 A) | 500 A | T4H030TW | T4V030TW |
| TMD | 40 A (28...40 A) | 500 A | T4H040TW | T4V040TW |
| TMD | 50 A (35...50 A) | 500 A | T4H050TW | T4V050TW |
| TMA | 80 A (56...80 A) | 800 A (400...800 A) | T4H080TW | T4V080TW |
| TMA | 100 A (70...100 A) | 1000 A (500...1000 A) | T4H100TW | T4V100TW |
| TMA | 125 A (88...125 A) | 1250 A (625...1250 A) | T4H125TW | T4V125TW |
| TMA | 150 A (105...150 A) | 1500 A (750...1500 A) | T4H150TW | T4V150TW |
| TMA | 200 A (140...200 A) | 2000 A (1000...2000 A) | T4H200TW | T4V200TW |
| TMA | 250 A (175...250 A) | 2500 A (1250...2500 A) | T4H250TW | T4V250TW |

### Tmax T4 100 A - FIXED (F) 3 poles - CSA C22.2 / UL listed (Discount DS-ST)
**Iu (40**°C) = 100 A - Front terminals (F)

| Electronic trip unit (AC only) - 600V AC | | Part number | |
|---|---|---|---|
| Type | In | H (35kA) | V (100kA) |
| PR221DS-LS/I | 100 A (40...100 A) | T4H100BW | T4V100BW |
| PR222DS-LSI | 100 A (40...100 A) | T4H100CW | T4V100CW |
| PR222DS-LSIG | 100 A (40...100 A) | T4H100EW | T4V100EW |

### Tmax T4 150 A - FIXED (F) 3 poles - CSA C22.2 / UL listed (Discount DS-ST)
**Iu (60**°C) = 150 A - Front terminals (F)

| Electronic trip unit (AC only) - 600V AC | | Part number | |
|---|---|---|---|
| Type | In | H (35kA) | V (100kA) |
| PR221DS-LS/I | 150 A (60...150 A) | T4H150BW | T4V150BW |
| PR222DS-LSI | 150 A (60...150 A) | T4H150CW | T4V150CW |
| PR222DS-LSIG | 150 A (60...150 A) | T4H150EW | T4V150EW |

### Tmax T4 250 A - FIXED (F) 3 poles - CSA C22.2 / UL listed (Discount DS-ST)
**Iu (60**°C) = 250 A - Front terminals (F)

| Electronic trip unit (AC only) - 600V AC | | Part number | |
|---|---|---|---|
| Type | In | H (35kA) | V (100kA) |
| PR221DS-LS/I | 250 A (100...250 A) | T4H250BW | T4V250BW |
| PR222DS-LSI | 250 A (100...250 A) | T4H250CW | T4V250CW |
| PR222DS-LSIG | 250 A (100...250 A) | T4H250EW | T4V250EW |

# Tmax molded case circuit breakers
## Current limiting circuit breakers

### Tmax T4 250 A - FIXED (F) 3 poles - 100% rated - CSA C22.2 / UL listed (Discount DS-ST)
**Iu (40**°C) = 100 A - Front terminals (F)

| Thermal-Magnetic trip unit TMF/TMD/TMA - 600V AC / 600V DC | | | Part number | |
|---|---|---|---|---|
| Type | In | $I_3$ | HQ (35kA) | VQ (100kA) |
| TMF | 20 A | 500 A | T4HQ020TW | T4VQ020TW |
| TMD | 30 A (21...30 A) | 500 A | T4HQ030TW | T4VQ030TW |
| TMD | 40 A (28...40 A) | 500 A | T4HQ040TW | T4VQ040TW |
| TMD | 50 A (35...50 A) | 500 A | T4HQ050TW | T4VQ050TW |
| TMA | 80 A (56...80 A) | 800 A (400...800 A) | T4HQ080TW | T4VQ080TW |
| TMA | 100 A (70...100 A) | 1000 A (500...1000 A) | T4HQ100TW | T4VQ100TW |
| TMA | 125 A (88...125 A) | 1250 A (625...1250 A) | T4HQ125TW | T4VQ125TW |
| TMA | 150 A (105...150 A) | 1500 A (750...1500 A) | T4HQ150TW | T4VQ150TW |
| TMA | 200 A (140...200 A) | 2000 A (1000...2000 A) | T4HQ200TW | T4VQ200TW |
| TMA | 250 A (175...250 A) | 2500 A (1250...2500 A) | T4HQ250TW | T4VQ250TW |

### Tmax T4 100 A - FIXED (F) 3 poles - 100% rated - CSA C22.2 / UL listed (Discount DS-ST)
**Iu (40**°C) = 100 A - Front terminals (F)

| Electronic trip unit (AC only) - 600V AC | | Part number | |
|---|---|---|---|
| Type | In | HQ (35kA) | VQ (100kA) |
| PR221DS-LS/I | 100 A (40...100 A) | T4HQ100BW | T4VQ100BW |
| PR222DS-LSI | 100 A (40...100 A) | T4HQ100CW | T4VQ100CW |
| PR222DS-LSIG | 100 A (40...100 A) | T4HQ100EW | T4VQ100EW |

### Tmax T4 150 A - FIXED (F) 3 poles - 100% rated - CSA C22.2 / UL listed (Discount DS-ST)
**Iu (60**°C) = 150 A - Front terminals (F)

| Electronic trip unit (AC only) - 600V AC | | Part number | |
|---|---|---|---|
| Type | In | HQ (35kA) | VQ (100kA) |
| PR221DS-LS/I | 150 A (60...150 A) | T4HQ150BW | T4VQ150BW |
| PR222DS-LSI | 150 A (60...150 A) | T4HQ150CW | T4VQ150CW |
| PR222DS-LSIG | 150 A (60...150 A) | T4HQ150EW | T4VQ150EW |

### Tmax T4 250 A - FIXED (F) 3 poles - 100% rated - CSA C22.2 / UL listed (Discount DS-ST)
**Iu (60**°C) = 250 A - Front terminals (F)

| Electronic trip unit (AC only) - 600V AC | | Part number | |
|---|---|---|---|
| Type | In | HQ (35kA) | VQ (100kA) |
| PR221DS-LS/I | 250 A (100...250 A) | T4HQ250BW | T4VQ250BW |
| PR222DS-LSI | 250 A (100...250 A) | T4HQ250CW | T4VQ250CW |
| PR222DS-LSIG | 250 A (100...250 A) | T4HQ250EW | T4VQ250EW |

# Tmax molded case circuit breakers
## Current limiting circuit breakers

### Tmax T5 300 A - FIXED (F) 3 poles - CSA C22.2 / UL listed (Discount DS-ST)
**Iu (40**°C) = 300 A - Front terminals (F)

| Thermal-Magnetic trip unit TMA - 600V AC / 600V DC | | | Part number | |
|---|---|---|---|---|
| Type | In | $I_3$ | H (35kA) | V (100kA) |
| TMA | 300 A (210...300 A) | 3000 A (1500...3000 A) | T5H300TW | T5V300TW |

### Tmax T5 300 A - FIXED (F) 3 poles - CSA C22.2 / UL listed (Discount DS-ST)
**Iu (40**°C) = 300 A - Front terminals (F)

| Electronic trip unit (AC only) - 600V AC | | Part number | |
|---|---|---|---|
| Type | In | H (35kA) | V (100kA) |
| PR221DS-LS/I | 300 A (120...300 A) | T5H300BW | T5V300BW |
| PR222DS-LSI | 300 A (120...300 A) | T5H300CW | T5V300CW |
| PR222DS-LSIG | 300 A (120...300 A) | T5H300EW | T5V300EW |

### Tmax T5 400 A - FIXED (F) 3 poles - CSA C22.2 / UL listed (Discount DS-ST)
**Iu (40**°C) = 400 A - Front terminals (F)

| Thermal-Magnetic trip unit TMA - 600V AC / 600V DC | | | Part number | |
|---|---|---|---|---|
| Type | In | $I_3$ | H (35kA) | V (100kA) |
| TMA | 400 A (280...400 A) | 4000 A (2000...4000 A) | T5H400TW | T5V400TW |

### Tmax T5 400 A - FIXED (F) 3 poles - CSA C22.2 / UL listed (Discount DS-ST)
**Iu (40**°C) = 400 A - Front terminals (F)

| Electronic trip unit (AC only) - 600V AC | | Part number | |
|---|---|---|---|
| Type | In | H (35kA) | V (100kA) |
| PR221DS-LS/I | 400 A (160...400 A) | T5H400BW | T5V400BW |
| PR222DS-LSI | 400 A (160...400 A) | T5H400CW | T5V400CW |
| PR222DS-LSIG | 400 A (160...400 A) | T5H400EW | T5V400EW |

# Tmax molded case circuit breakers
## Current limiting circuit breakers

### Tmax T5 300 A - FIXED (F) 3 poles - 100% rated - CSA C22.2 / UL listed (Discount DS-ST)
**Iu (40**°C) = 300 A - Front terminals (F)

| Thermal-Magnetic trip unit TMA - 600V AC / 600V DC | | | Part number | |
|---|---|---|---|---|
| Type | In | $I_3$ | HQ (35kA) | VQ (100kA) |
| TMA | 300 A (210...300 A) | 3000 A (1500...3000 A) | T5HQ300TW | T5VQ300TW |

### Tmax T5 300 A - FIXED (F) 3 poles - 100% rated - CSA C22.2 / UL listed (Discount DS-ST)
**Iu (40**°C) = 300 A - Front terminals (F)

| Electronic trip unit (AC only) - 600V AC | | Part number | |
|---|---|---|---|
| Type | In | HQ (35kA) | VQ (100kA) |
| PR221DS-LS/I | 300 A (120...300 A) | T5HQ300BW | T5VQ300BW |
| PR222DS-LSI | 300 A (120...300 A) | T5HQ300CW | T5VQ300CW |
| PR222DS-LSIG | 300 A (120...300 A) | T5HQ300EW | T5VQ300EW |

### Tmax T5 400 A - FIXED (F) 3 poles - 100% rated - CSA C22.2 / UL listed (Discount DS-ST)
**Iu (40**°C) = 400 A - Front terminals (F)

| Thermal-Magnetic trip unit TMA - 600V AC / 600V DC | | | Part number | |
|---|---|---|---|---|
| Type | In | $I_3$ | HQ (35kA) | VQ (100kA) |
| TMA | 400 A (280...400 A) | 4000 A (2000...4000 A) | T5HQ400TW | T5VQ400TW |

### Tmax T5 400 A - FIXED (F) 3 poles - 100% rated - CSA C22.2 / UL listed (Discount DS-ST)
**Iu (40**°C) = 400 A - Front terminals (F)

| Electronic trip unit (AC only) - 600V AC | | Part number | |
|---|---|---|---|
| Type | In | HQ (35kA) | VQ (100kA) |
| PR221DS-LS/I | 400 A (160...400 A) | T5HQ400BW | T5VQ400BW |
| PR222DS-LSI | 400 A (160...400 A) | T5HQ400CW | T5VQ400CW |
| PR222DS-LSIG | 400 A (160...400 A) | T5HQ400EW | T5VQ400EW |

# Tmax molded case circuit breakers
## Cradle conversion kits and accessories

### Tmax Plug-in base with front terminals (F) - T2...T3
### CSA / UL listed

| Breaker type | Part number | |
|---|---|---|
| | 3 poles | 4 poles |
| T2 | KT2PFF | KT2PFF-4 |
| T3 | KT3PFF | KT3PFF-4 |

### Tmax Plug-in base with front extended terminals (EF) - Ts3...T5
### CSA / UL listed

| Breaker type | Part number | |
|---|---|---|
| | 3 poles | 4 poles |
| Ts3 | KTs3PFF | KTs3PFF-4 |
| T4 | KT4PFEF | KT4PFEF-4 |
| T5 400 A | KT5PFEF | KT5PFEF-4 |
| T5 600 A | KT5PFEF6 | KT5PFEF6-4 |

### Tmax Plug-in base with rear vertical terminals (VR) - T4...T5
### CSA / UL listed

| Breaker type | Part number | |
|---|---|---|
| | 3 poles | 4 poles |
| T4 | KT4PFVR | KT4PFVR-4 |
| T5 400 A | KT5PFVR | KT5PFVR-4 |
| T5 600 A | KT5PFVR6 | KT5PFVR6-4 |

### Tmax Plug-in base with rear horizontal terminals (HR) - T4...T5
### CSA / UL listed

| Breaker type | Part number | |
|---|---|---|
| | 3 poles | 4 poles |
| T4 | KT4PFHR | KT4PFHR-4 |
| T5 400 A | KT5PFHR | KT5PFHR-4 |
| T5 600 A | KT5PFHR6 | KT5PFHR6-4 |

### Tmax Plug-in base with rear threaded terminals (R) - Ts3
### CSA / UL listed

| Breaker type | Part number | |
|---|---|---|
| | 3 poles | 4 poles |
| Ts3 | KTs3PFR | KTs3PFR-4 |

### Tmax accessory connectors and adaptors - T2...T6
Required when adding accessories to plug-in type breakers

| Accessory type | Part number | |
|---|---|---|
| | T2...T3 | T4...T6 |
| Shunt trip / Undervoltage | KT3PC-3 | KT6ADP-5 |
| 1 form C + 1 BA | KT3PC-6 | KT6ADP-6 |
| 3 form C + 1BA | KT3PC-12 | KT6ADP-12 |
| Stored energy motor | - | KT6ADP-10 |
| Stored energy motor + Shunt trip / Undervoltage | - | KT6ADP-10 |

# Tmax molded case circuit breakers
## Cradle conversion kits and accessories

### Tmax Draw-out cradle with front terminals (F) - Ts3
### CSA / UL listed

| Breaker type | Part number | |
|---|---|---|
| | 3 poles | 4 poles |
| Ts3 | KTs3WFC | KTs3WFC-4 |

### Tmax Draw-out cradle with rear terminals (R) - Ts3
### CSA / UL listed

| Breaker type | Part number | |
|---|---|---|
| | 3 poles | 4 poles |
| Ts3 | KTs3WFR | KTs3WFR-4 |

### Tmax Draw-out cradle with front extended terminals (EF) - Ts3...T6
### CSA / UL listed

| Breaker type | Part number | |
|---|---|---|
| | 3 poles | 4 poles |
| Ts3 | KTs3WFF | KTs3WFF-4 |
| T4 | KT4WFEF | KT4WFEF-4 |
| T5 400 A | KT5WFEF | KT5WFEF-4 |
| T5 600 A | KT5WFEF6 | KT5WFEF6-4 |
| T6 | KT6WFEF | KT6WFEF |

### Tmax Draw-out cradle with rear vertical terminals (VR) - T4...T6
### CSA / UL listed

| Breaker type | Part number | |
|---|---|---|
| | 3 poles | 4 poles |
| T4 | KT4WFVR | KT4WFVR-4 |
| T5 400 A | KT5WFVR | KT5WFVR-4 |
| T5 600 A | KT5WFVR6 | KT5WFVR6-4 |
| T6 | KT6WFVR | KT6WFVR-4 |

### Tmax Draw-out cradle with rear horizontal terminals (HR) - T4...T6
### CSA / UL listed

| Breaker type | Part number | |
|---|---|---|
| | 3 poles | 4 poles |
| T4 | KT4WFHR | KT4WFHR-4 |
| T5 400 A | KT5WFHR | KT5WFHR-4 |
| T5 600 A | KT5WFHR6 | KT5WFHR6-4 |
| T6 | KT6WFHR | KT6WFHR-4 |

### Tmax Draw-out cradle with rear adkustable terminals (RC) - T7 / T7M
### CSA / UL listed

| Breaker type | Part number | |
|---|---|---|
| | 3 poles | 4 poles |
| T7...T7M | KT7WFRC | KT7WFRC-4 |

# Tmax molded case circuit breakers
## Cradle conversion kits and accessories

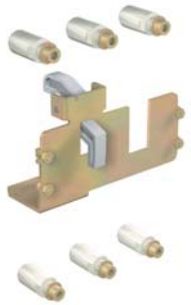

### Tmax conversion kits from FIXED into moving part of PLUG-IN - Ts3...T5
### CSA / UL listed

| Breaker type | Part number | |
|---|---|---|
| | 3 poles | 4 poles |
| Ts3 | KTs3PMK | KTs3PMK-4 |
| T2 | KT2PMK | KT2PMK-4 |
| T3 | KT3PMK | KT3PMK-4 |
| T4 | KT4PMK | KT4PMK-4 |
| T5 400 A | KT5PMK | KT5PMK-4 |
| T5 600 A | KT5PMK6 | KT5PMK6-4 |

**The plug-in version must be composed as follow:**
**a) Fixed circuit-breaker**
**b) Conversion kit for fixed into moving part of plug-in**
**c) Plug-in base**

### Tmax conversion kits from FIXED into moving part of DRAW-OUT - Ts3...T7
### CSA / UL listed

| Breaker type | Part number | |
|---|---|---|
| | 3 poles | 4 poles |
| Ts3 | KTs3WMK | KTs3WMK-4 |
| T4 | KT4WMK | KT4WMK-4 |
| T5 400 A | KT5WMK | KT5WMK-4 |
| T5 600 A | KT5WMK6 | KT5WMK6-4 |
| T6 | KT6WMK | KT6WMK-4 |
| T7...T7M | KT7WMK | KT7WMK-4 |

**The plug-in version must be composed as follow:**
**a) Fixed circuit-breaker**
**b) Conversion kit for fixed into moving part of draw out**
**c) Cradle**
**d) Front lever, rotary handle or motor operator (only for T4, T5 and T6)**
**e) Sliding contact blocks if circuit breaker is automatic or fitted with electrical accessories (only for T7)**

### Sliding contact blocks for DRAW-OUT type - T7 / T7M
### CSA / UL listed

| type | Part number | |
|---|---|---|
| | T7 | T7M |
| Left block for breaker MP | KT7XSCMP-L | KT7XSCMP-L |
| Center block for breaker MP | KT7XSCMP-C | KT7XSCMP-C |
| Right block for breaker MP | KT7XSCMP-R | KT7XSCMP-R |
| Left block for cradle | KT7SCFP-L | KT7MXSCFP-L |
| Center block for cradle | KT7XSCFP-C | KT7XSCFP-C |
| Right block for cradle | KT7XSCFP-R | KT7XSCFP-R |

**Note:** **Moving part of a circuit breaker fitted with electronic accessories or PR331/P and PR332/P electronic trip units is supplied as standard with blocks for the connection, while blocks for cradle must always be ordered**

# Tmax molded case circuit breakers
## Cradle conversion kits and accessories

### HR/VR terminals for cradle - T7 / T7M
### CSA / UL listed

| Breaker type | Part number | |
|---|---|---|
| | 3 poles | 4 poles |
| T7...T7M | KT7XHRVR-3 | KT7XHRVR-4 |

### Terminal covers for cradle TCFP - Ts3...T5
### CSA / UL listed

| Breaker type | Part number | |
|---|---|---|
| | 3 poles | 4 poles |
| Ts3 | KTs3TCFP-3 | KTs3TCFP-4 |
| T4 | KT4TCFP-3 | KT4TCFP-4 |
| T5 | KT5TCFP-3 | KT5TCFP-4 |

# Tmax molded case circuit breakers
## Electrical accessories

### Shunt trip SOR - T1...T6
### CSA / UL listed

| Control voltage | Part number | |
|---|---|---|
| | T1...T3 | T4...T6 |
| 12V DC | KT3S9 | KT6S9 |
| 24...30V AC/DC | KT3S8 | KT6S8 |
| 48...60V AC/DC | KT3S7 | KT6S7 |
| 110...125V AC/DC | KT3S4 | KT6S4 |
| 380...440V AC | KT3S3 | KT6S3 |
| 220...250V AC/DC | KT3S2 | KT6S2 |
| 480...500V AC | KT3S1 | KT6S1 |

### Shunt trip SOR - Ts3 (Requires a connector)
### CSA / UL listed

| Control voltage | Part number |
|---|---|
| | Ts3 |
| 12V DC | KTs3S9 |
| 24V AC/DC | KTs3S8 |
| 48V AC/DC | KTs3S7 |
| 110...125V AC/DC | KTs3S4 |
| 220...250V AC/DC | KTs3S2 |
| 480V AC | KTs3S1 |

### Shunt trip connector - Ts3 (Required)
### CSA / UL listed

| Breaker type | Part number | |
|---|---|---|
| | Fixed | Draw-out |
| Ts3 | KTs3C-SU | KTs3C-SUP |

**Shunt trip with permanent supply:**
For remote opening of circuit breaker. Guaranteed operation between 75-110% of the rated power supply voltage.
These shunt trips have much lower power consumption.

### Shunt trip with permanent operation PS-SOR - T4...T6
### CSA / UL listed

| Control voltage | Part number |
|---|---|
| | T4...T6 |
| 24...30V DC | KT6SP4 |
| 110...120V AC/DC | KT6SP8 |

### Shunt trip with permanent operation PS-SOR - Ts3 (Requires a connector)
### CSA / UL listed

| Control voltage | Part number |
|---|---|
| | Ts3 |
| 24V DC | KTs3SP4 |
| 120V AC | KTs3SP8 |

# Tmax molded case circuit breakers
## Electrical accessories

### Shunt trip YO - T7 / T7M
### CSA / UL listed

| Control voltage | Part number T7...T7M |
|---|---|
| 24V AC/DC | KT7XS0 |
| 30V AC/DC | KT7XS9 |
| 48V AC/DC | KT7XS8 |
| 60V AC/DC | KT7XS7 |
| 110...120V AC/DC | KT7XS6 |
| 120...127V AC/DC | KT7XS5 |
| 220...240V AC/DC | KT7XS4 |
| 250V AC/DC | KT7XS3 |
| 380...440V AC | KT7XS2 |
| 440...480V AC | KT7XS1 |

### Shunt trip YO/YO2 - T8
### CSA / UL listed

| Control voltage | Part number | |
|---|---|---|
| | YO-T8 | YO2-T8 |
| 24V AC/DC | KT8ES0 | KT8ES0-2 |
| 30V AC/DC | KT8ES9 | KT8ES9-2 |
| 48V AC/DC | KT8ES8 | KT8ES8-2 |
| 60V AC/DC | KT8ES7 | KT8ES7-2 |
| 110...120V AC/DC | KT8ES6 | KT8ES6-2 |
| 120...127V AC/DC | KT8ES5 | KT8ES5-2 |
| 220...240V AC/DC | KT8ES4 | KT8ES4-2 |
| 250V AC/DC | KT8ES3 | KT8ES3-2 |
| 380...440V AC | KT8ES2 | KT8ES2-2 |
| 440...480V AC | KT8ES1 | KT8ES1-2 |

# Tmax molded case circuit breakers
## Electrical accessories

### Undervoltage release UVR - T1...T6
### CSA / UL listed

| Control voltage | Part number | |
|---|---|---|
| | T1...T3 | T4...T6 |
| 24...30V AC/DC | KT3U8 | KT6U8 |
| 48V AC/DC | KT3U7 | KT6U7 |
| 60V AC/DC | KT3U5 | KT6U5 |
| 110...125V AC/DC | KT3U4 | KT6U4 |
| 380...440V AC | KT3U3 | KT6U3 |
| 220...250V AC/DC | KT3U2 | KT6U2 |
| 480...500V AC | KT3U1 | KT6U1 |

### Undervoltage release UVR - Ts3 (Requires a connector)
### CSA / UL listed

| Control voltage | Part number |
|---|---|
| | T7...T7M |
| 24V AC/DC | KTs3U8 |
| 48V AC/DC | KTs3U7 |
| 110...125V DC | KTs3U6 |
| 220...250V DC | KTs3U5 |
| 110...127V AC | KTs3U4 |
| 24V AC | KTs3U3 |
| 220...250V AC | KTs3U2 |
| 480V AC | KTs3U1 |

### Undervoltage connector - Ts3 (Required)
### CSA / UL listed

| Breaker type | Part number | |
|---|---|---|
| | Fixed | Draw-out |
| Ts3 | KTs3C-SU | KTs3C-SUP |

### Undervoltage release UVR - T7 / T7M
### CSA / UL listed

| Control voltage | Part number T7...T7M |
|---|---|
| 24V AC/DC | KT7XU0 |
| 30V AC/DC | KT7XU9 |
| 48V AC/DC | KT7XU8 |
| 60V AC/DC | KT7XU7 |
| 110...120V AC/DC | KT7XU6 |
| 120...127V AC/DC | KT7XU5 |
| 220...240V AC/DC | KT7XU4 |
| 250V AC/DC | KT7XU3 |
| 380...440V AC | KT7XU2 |
| 440...480V AC | KT7XU1 |

### Undervoltage release UVR - T8
### CSA / UL listed

| Control voltage | Part number T8 |
|---|---|
| 24V AC/DC | KT8EU0 |
| 30V AC/DC | KT8EU9 |
| 48V AC/DC | KT8EU8 |
| 60V AC/DC | KT8EU7 |
| 110...120V AC/DC | KT8EU6 |
| 120...127V AC/DC | KT8EU5 |
| 220...240V AC/DC | KT8EU4 |
| 250V AC/DC | KT8EU3 |
| 380...440V AC | KT8EU2 |
| 440...480V AC | KT8EU1 |

# Tmax molded case circuit breakers
## Electrical accessories

### Shunt closing release YC - T7M
### CSA / UL listed

| Control voltage | Part number T7M |
|---|---|
| 24V AC/DC | KT7MXC0 |
| 30V AC/DC | KT7MXC9 |
| 48V AC/DC | KT7MXC8 |
| 60V AC/DC | KT7MXC7 |
| 110...120V AC/DC | KT7MXC6 |
| 120...127V AC/DC | KT7MXC5 |
| 220...240V AC/DC | KT7MXC4 |
| 250V AC/DC | KT7MXC3 |
| 380...440V AC | KT7MXC2 |
| 440...480V AC | KT7MXC1 |

### Shunt closing release YC - T8
### CSA / UL listed

| Control voltage | Part number T8 |
|---|---|
| 24V AC/DC | KT8EC0 |
| 30V AC/DC | KT8EC9 |
| 48V AC/DC | KT8EC8 |
| 60V AC/DC | KT8EC7 |
| 110...120V AC/DC | KT8EC6 |
| 120...127V AC/DC | KT8EC5 |
| 220...240V AC/DC | KT8EC4 |
| 250V AC/DC | KT8EC3 |
| 380...440V AC | KT8EC2 |
| 440...480V AC | KT8EC1 |

# Tmax molded case circuit breakers
## Electrical accessories

### Auxiliary contacts AUX - T1...T6
### CSA / UL listed

| Control voltage | Part number | |
|---|---|---|
| | T1...T3 | T4...T6 |
| 1 form C + 1 BA 250V AC/DC | KT3AS (1) | KT6AS |
| 3 form C + 1 BA 250V AC/DC | KT3AS3 (1) | KT6AS3 |
| 2 form C 400V AC | - | KT6AS2 |
| 3 form C + 1 BA 24V DC | - | KT6AS3L |
| Manual / Remote signalling contact for stored energy motor operator | - | KT6MA |

**(1) Can't be fitted with T2 equipped with PR221DS electronic trip unit**

### Auxiliary contacts AUX - T2 with PR221DS

| Control voltage | Part number |
|---|---|
| | T2 |
| 2 form C + 1 BA for PR221DS | KT2AS-E |
| 1 form C + 1 BA + 1S51 for PR221DS | KT2AS-E2 |

### Auxiliary contacts AUX - T4...T6 with PR222DS/PD-A only

| Control voltage | Part number | |
|---|---|---|
| | T4...T5 | T6 |
| 1 form C + 1 BA for PR222DS/PD-A | KT5AS-E | KT6AS-E |

### Auxiliary contacts AUX - Ts3 (Requires a connector)
### CSA / UL listed

| Control voltage | Part number |
|---|---|
| | Ts3 |
| 2 form C 250V AC/DC | KTs3AS |
| 1 form C + 1 BA 250V AC/DC | KTs3BA |

### Auxiliary contacts connector - Ts3 (Required)
### CSA / UL listed

| Breaker type | Part number | |
|---|---|---|
| | Fixed | Draw-out |
| Ts3 | KTs3C-AB | KTs3C-ABP |

# Tmax molded case circuit breakers
## Electrical accessories

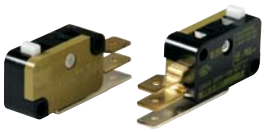

### Auxiliary contacts AUX - T7 / T7M
### CSA / UL listed

| Type | Part number | |
|---|---|---|
| | T7 | T7M |
| 1 form C + 1 BA 400V AC | KT7AS | - |
| 2 form C 400V AC | KT7AS2 | KT7XAS2 |
| 1 form C + 1 BA 24V DC | KT7ASL | - |
| 2 form C 24V DC | KT7XAS2L | KT7XAS2L |
| 1 S51 250V AC | KT7S51 | KT7XS51 |
| Ready to close contact 24V DC | - | KT7XRTC24 |
| Ready to close contact 250V AC/DC | - | KT7XRTC250 |
| Spring charged 24 V DC | - | KT7XSC24 |
| Spring charged 250V AC/DC | - | KT7XSC250 |
| 1 BA + remote reset 24...30V AC/DC | - | KT7XETBAR9 |
| 1 BA + remote reset 110...130V AC/DC | - | KT7XETBAR5 |
| 1 BA + remote reset 200...240V AC/DC | - | KT7XETBAR4 |

**Note: For T7/T7M in draw-out version, sliding contact blocks for cradle and breaker are necessary**

### Possible standard combinations are (excluding S51, RTC and SC):

T7: a) 2 form C + 1 BA
b) 3 form C + 1 BA
c) 2 form C

T7M: a) 2 form C
b) 4 form C

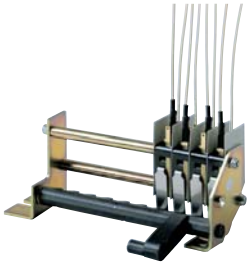

### Auxiliary contacts AUX - T8
### CSA / UL listed

| Type | Part number |
|---|---|
| | T8 |
| 4 form C for PR232-PR331 | KT8AS4 |
| 4 form C for PR332 (1) | KT8AS4-332 |
| 4 form C for PR232-PR331 low voltage 24V | KT8AS4L |
| 4 form C for PR332 low voltage 24V | KT8AS4L-332 |
| 1 BA | KT8ETBA |
| 1 BA + remote reset 24...30V AC/DC | KT8ETBAR9 |
| 1 BA + remote reset 110...130V AC/DC | KT8ETBAR5 |
| 1 BA + remote reset 220...240V AC/DC | KT8ETBAR4 |
| 1 NC contact for UVR de-energized | KT8EUE10 |
| 1 NO contact for UVR de-energized | KT8EUE01 |

**(1) 4 auxiliary contacts supplied standard on T8 equipped with PR332. To be ordered as spare part.**

# Tmax molded case circuit breakers
## Electrical accessories

### Early auxiliary contacts AUE - T1...T7

| Type | Part number | | | |
|---|---|---|---|---|
| | T1...T3 | T4...T5 | T6 | T7 |
| Early make contact on rotary handle | KT3EM | KT5EM | KT6EM | KT7EM |

**Note: For T7 in draw-out version, sliding contact blocks for cradle and breaker are necessary**

### Auxiliary position contacts AUP - T4...T6

| Type | Part number T4...T6 |
|---|---|
| 1 form C RACKED-IN contact 400V AC/DC | KT6AUPI |
| 1 form C RACKED-IN contact 24V DC | KT6AUPI24V |
| 1 form C RACKED-OUT contact 400V AC/DC | KT6AUPP |
| 1 form C RACKED-OUT contact 24V DC | KT6AUPP24V |

### Auxiliary position contacts AUP - T7 / T7M
### CSA / UL listed

| Type | Part number T7...T7M |
|---|---|
| Position contacts 24V DC | KT7XAUP24 |
| Position conacts 250V AC | KT7XAUP250 |


### Mechanical counter - T7M...T8

| Type | Part number | |
|---|---|---|
| | T7M | T8 |
| Operation counter | KT7XEMC | KT8EMC |

# Tmax molded case circuit breakers
## Electrical accessories

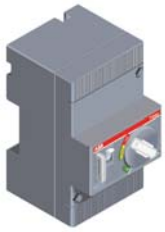

### Solenoid motor operator MOS - T1...T3
### CSA / UL listed

| Control voltage | Part number T1...T3 |
|---|---|
| TOP mounted 48...60V DC | KT3M1 |
| TOP mounted 110...250V AC/DC | KT3M2 |

### Direct action motor operator - Ts3 (Requires a connector)
### CSA / UL listed

| Control voltage | Part number Ts3 |
|---|---|
| 24V DC | KTs3M8 |
| 48V DC | KTs3M7 |
| 100...125V AC/DC | KTs3M4 |
| 220...250V AC/DC | KTs3M2 |

### Direct action motor operator connector - Ts3 (Required)
### CSA / UL listed

| Breaker type | Part number | |
|---|---|---|
| | Fixed | Draw-out |
| Ts3 | KTs3C-M | KTs3C-MP |

### Stored energy motor operator MOE - T4...T6
### CSA / UL listed

| Control voltage | Part number | |
|---|---|---|
| | T4...T5 | T6 |
| 24V DC | KT5M8 | KT6M8 |
| 48...60V DC | KT5M7 | KT6M7 |
| 110...125V AC/DC | KT5M4 | KT6M4 |
| 380V AC | KT5M3 | KT6M3 |
| 220...250V AC/DC | KT5M2 | KT6M2 |

### Stored energy motor operator with electronics MOE-E - T4...T6
### IEC listed

| Control voltage | Part number | |
|---|---|---|
| | T4...T5 | T6 |
| 24V DC | KT5M8-E | KT6M8-E |
| 48...60V DC | KT5M7-E | KT6M7-E |
| 110...125V AC/DC | KT5M4-E | KT6M4-E |
| 380V AC | KT5M3-E | KT6M3-E |
| 220...250V AC/DC | KT5M2-E | KT6M2-E |

# Tmax molded case circuit breakers
## Electrical accessories

### Spring charging motor - T7M
### CSA / UL listed

| Control voltage | Part number T7M |
|---|---|
| 24...30V AC/DC | KT7MXM9 |
| 48...60V AC/DC | KT7MXM7 |
| 100...130V AC/DC | KT7MXM5 |
| 220...250V AC/DC | KT7MXM3 |
| 380...415V AC | KT7MXM2 |

**Note: For T7M in draw-out version, sliding contact blocks for cradle and breaker are necessary**

### Spring charging motor - T8
### CSA / UL listed

| Control voltage | Part number T8 |
|---|---|
| 24...30V AC/DC | KT8EM9 |
| 48...60V AC/DC | KT8EM7 |
| 100...130V AC/DC | KT8EM5 |
| 220...250V AC/DC | KT8EM3 |

### CT for external neutral - T4...T6
### UL / CSA listed

| Type | Part number | | |
|---|---|---|---|
| | T4 | T5 | T6 |
| CT for external neutral 100 A (1) | KT4NCT-100 | - | - |
| CT for external neutral 150 A (1) | KT4NCT-150 | - | - |
| CT for external neutral 250 A (1) | KT4NCT-250 | - | - |
| CT for external neutral 300 A (1) | - | KT5NCT-300 | - |
| CT for external neutral 400 A (1) | - | KT5NCT-400 | - |
| CT for external neutral 600 A (1) | - | KT5NCT-600 | KT6NCT-600 |
| CT for external neutral 800 A (1) | - | - | KT6NCT-800 |

**(1) X4 connector required to connect to trip unit**

### Current sensors for external neutral - T7...T8
### UL / CSA listed

| Type | Part number | |
|---|---|---|
| | T7...T7M | T8 |
| Current sensors for external neutral 400...1200 A | KT7XNCT-1200 | - |
| Current sensors for external neutral 1000...3000 A | - | KT8NCT-3000 |

### X3-X4 connectors for external neutral - T4...T6
### UL / CSA listed

| Type | Part number | |
|---|---|---|
| | Fixed | Plug-in / Draw-out |
| X3 connector for T4...T6 equipped with PR222DS trip unit | KT6CX3 | KT6CX3-P |
| X4 connector for T4...T6 equipped with PR222DS trip unit | KT6CX4 | KT6CX4-P |

# Tmax molded case circuit breakers
## Mechanical accessories

### Rotary handle operators (Direct mounted) RHD - T1...T7
### CSA / UL listed

| Type | Part number | | | |
|---|---|---|---|---|
| | T1...T3 | T4...T5 | T6 | T7 |
| Rotary handle FIXED / PLUG-IN | KT3RH | KT5RH | KT6RH | KT7RH |
| Rotary handle DRAW-OUT | - | KT5RHW | KT6RHW | KT7RH |

KT3VD-M + KT3VD-S + KT3VD-H

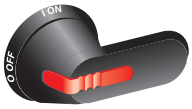


OHB pistol type handle

### Rotary handle operators (Variable depth) RHD - T1...T7
### CSA / UL listed

| Type | Part number | | | |
|---|---|---|---|---|
| | T1...T3 | T4...T5 | T6 | T7 |
| Mechanism | KT3VD-M | KT5VD-M | KT6VD-M | KT7VD-M |
| NEMA 1 square type handle | KT3VD-H | KT5VD-H | KT6VD-H | KT7VD-H |
| NEMA 4, 4x pistol type black handle | - | - | - | - |
| NEMA 4, 4x pistol type yellow handle | - | - | - | - |
| NEMA 1,3R,12 pistol type black handle | OHB65J6B | OHB125J10B | OHB125J10B | OHB125J10B |
| NEMA 1,3R,12 pistol type yellow handle | - | - | - | - |
| Shaft for pistol type handle | OXP6X430 | OXP10X500 | OXP10X500 | OXP10X500 |
| Shaft for square type handle | KT3VD-S | KT5VD-S | KT5VD-S | KT7VD-S |

**Note: A complete kit consists in 1 mechanism + 1 shaft + 1 handle. KT*VD-S shall only be used with KT*VD-H handle type**

### Rotary handle operators (Direct mounted) RHD - Ts3

| Type | Part number |
|---|---|
| | Ts3 |
| Rotary handle FIXED / PLUG-IN | KTs3RH |
| Rotary handle DRAW-OUT | KTs3RHW |

KTs3VD-M + KTs3VD-S + KTs3VD-H

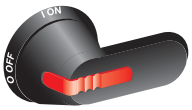


OHB pistol type handle

### Rotary handle operators (Variable depth) RHD - Ts3

| Type | Part number |
|---|---|
| | Ts3 |
| Mechanism | KTs3VD-M |
| NEMA 1 square type handle | KTs3VD-H |
| NEMA 4, 4x pistol type black handle | OHB125L10 |
| NEMA 1,3R,12 pistol type black handle | OHB125J10X |
| Shaft for pistol type handle | OXP10X500 |
| Shaft for square type handle | KTs3VD-S |

**Note: A complete kit consists in 1 mechanism + 1 shaft + 1 handle. KTs3VD-S shall only be used with KTs3VD-H handle type**

# Tmax molded case circuit breakers
## Mechanical accessories

### Cable operated flange handles - T1...T5
### CSA / UL listed (Discount DS-HT)

| Type | Part number | | | |
|---|---|---|---|---|
| | T1...T2 | T3 | Ts3...T4 | T5 |
| Mechanism | MKCT2 | MKCT3 | MKCT4 | MKCT5 |
| NEMA 1,3R,12 grey painted handle | OHF1C12T | OHF1C12T | OHF1C12 (1) | OHF1C12 (1) |
| NEMA 4, 4x nickel plated handle | OHF1C4T | OHF1C4T | OHF1C4 (1) | OHF1C4 (1) |

**(1) Discount DS-H**

### Cables for flange handles - T1...T5
### CSA / UL listed (Discount DS-H)

| Type | Part number T1...T5 |
|---|---|
| Cable 91 cm (36”) | OXC1L36 |
| Cable 122 cm (48”) | OXC1L48 |
| Cable 152 cm (60”) | OXC1L60 |
| Cable 183 cm (72”) | OXC1L72 |
| Cable 213 cm (84”) | OXC1L84 |
| Cable 244 cm (96”) | OXC1L96 |
| Cable 305 cm (108”) | OXC1L108 |

**The flange handle must be composed as follow:**
**a) 1x Fixed circuit-breaker**
**b) 1x Mechanism**
**c) 1x Handle**
**d) 1x Cable**


### Padlock lever lock PLL - T1...T3
### CSA / UL listed

| Type | Part number T1...T3 |
|---|---|
| Padlock in OPEN-CLOSED for fixed version only | KT3LD |
| Padlock in OPEN for fixed version only | KT3LDO |

### Front lever operating mechanism FLD - Ts3

| Type | Part number Ts3 |
|---|---|
| Padlock in OPEN for fixed / plug-in version | KTs3FLD |
| Padlock in OPEN for draw-out version | KTs3LDW |

### Front lever operating mechanism FLD - T4...T6
### CSA / UL listed

| Type | Part number | |
|---|---|---|
| | T4...T5 | T6 |
| Padlock in OPEN for fixed / plug-in version | KT5FLD | KT6FLD |
| Padlock in OPEN for draw-out version | KT5FLDW | KT6FLDW |

### Padlock lever lock PLL - T7 / T7M
### CSA / UL listed

| Type | Part number | |
|---|---|---|
| | T7 | T7M |
| Padlock in OPEN for fixed / Draw-out version | KT7LDO | KT7MLDO |

# Tmax molded case circuit breakers
## Mechanical accessories

### Padlock - T8
### CSA / UL listed

| Type | Part number T8 |
|---|---|
| Padlock in OPEN position | KT8EPD1 |
| Padlock in OPEN position HD | KT8EPDHD1 |

### Pushbutton protection - T7M...T8

| Type | Part number | |
|---|---|---|
| | T7M | T8 |
| Pushbutton protection | KT7XTPC | KT8EPG |
| Pushbutton protection independent cover | KT7XTPCI | - |

### Key lock for rotary handle mechanism RHL - T1...T3

| Type | Part number T1...T3 |
|---|---|
| Different keys in OPEN position | KT3RHL3 |

### Key lock for rotary handle mechanism KLF - Ts3

| Type | Part number T1...T3 |
|---|---|
| Different keys in OPEN position | KTs3KLFD |
| Same keys in OPEN position | KTs3KLFD-2 |

### Key lock for rotary handle mechanism KLF - T4...T6

| Type | Part number | |
|---|---|---|
| | T4...T5 | T6 |
| Different keys in OPEN position | KT5KL-D | KT6KLFD |
| Same keys in OPEN position # 20005 | KT5KL-20005 | KT6KLFS-20005 |
| Same keys in OPEN position # 20006 | KT5KL-20006 | KT6KLFS-20006 |
| Same keys in OPEN position # 20007 | KT5KL-20007 | KT6KLFS-20007 |
| Same keys in OPEN position # 20008 | KT5KL-20008 | KT6KLFS-20008 |

# Tmax molded case circuit breakers
## Mechanical accessories

### Key lock for rotary handle mechanism KLF - T7

| Type | Part number Ts3 |
|---|---|
| Different keys in OPEN position | KT7KLFD |
| Same keys in OPEN position # 20005 | KT7KLFS-20005 |
| Same keys in OPEN position # 20006 | KT7KLFS-20006 |
| Same keys in OPEN position # 20007 | KT7KLFS-20007 |
| Same keys in OPEN position # 20008 | KT7KLFS-20008 |

### Key lock on circuit breaker KLC - T7 / T7M

| Type | Part number | |
|---|---|---|
| | T7 | T7M |
| Different keys in OPEN position | KT7KLCD | KT7MKLCD |
| Same keys in OPEN position # 20005 | KT7KLCS-20005 | KT7MKLCS-20005 |
| Same keys in OPEN position # 20006 | KT7KLCS-20006 | KT7MKLCS-20006 |
| Same keys in OPEN position # 20007 | KT7KLCS-20007 | KT7MKLCS-20007 |
| Same keys in OPEN position # 20008 | KT7KLCS-20008 | KT7MKLCS-20008 |

### Key lock on circuit breaker - T8

| Type | Part number Ts3 |
|---|---|
| Different keys in OPEN position | KT8KL-D |
| Same keys in OPEN position # 20005 | KT8KL-20005 |
| Same keys in OPEN position # 20006 | KT8KL-20006 |
| Same keys in OPEN position # 20007 | KT8KL-20007 |
| Same keys in OPEN position # 20008 | KT8KL-20008 |

### Key lock for motor operator MOL - Ts3

| Type | Part number Ts3 |
|---|---|
| Different keys in OPEN position | KTs3KL-EO |
| Same keys in OPEN position | KTs3KL-EO-2 |

### Key lock for motor operator MOL - T4...T6

| Type | Part number | |
|---|---|---|
| | T7M | T8 |
| Different keys in OPEN position | KT5KL-MO-D | KT6KL-MO-D |
| Same keys in OPEN position # 20005 | KT5KL-MO-20005 | KT6KL-MO-20005 |
| Same keys in OPEN position # 20006 | KT5KL-MO-20006 | KT6KL-MO-20006 |
| Same keys in OPEN position # 20007 | KT5KL-MO-20007 | KT6KL-MO-20007 |
| Same keys in OPEN position # 20008 | KT5KL-MO-20008 | KT6KL-MO-20008 |

# Tmax molded case circuit breakers
## Mechanical accessories

### Key lock in RACKED-IN/TEST/RACKED-OUT position - T7 / T7M

| Type | Part number T7...T7M |
|---|---|
| For 1 circuit breaer, different key | KT7XPL-D |
| For group of circuit breakers, same key # 20005 | KT7XPL-20005 |
| For group of circuit breakers, same key # 20006 | KT7XPL-20006 |
| For group of circuit breakers, same key # 20007 | KT7XPL-20007 |
| For group of circuit breakers, same key # 20008 | KT7XPL-20008 |
| Provision for Ronis key lock | KT7XPL-R |
| Provision for Profalux key lock | KT7XPL-P |
| Provision for Castell key lock | KT7XPL-C |
| Provision for Castell key lock | KT7XPL-K |

**Note: the cradle can be euipped with 2 different keylocks**

### Accessory for lock in RACKED-OUT position - T7 / T7M

| Type | Part number T7...T7M |
|---|---|
| Lock in racked-out position | KT7XPLA |

### Mechanical compartment door lock - T7 / T7M

| Type | Part number T7...T7M |
|---|---|
| Door lock with cables [(1)] | KT7XMLCD |
| Door lock (wall fixing) | KT7XMLWMCB |
| Door lock (floor fixing) | KT7XMLFMCB |
| Door lock for DRAW-OUT type | KT7XMLDOCB |

**Note: a circuit breaker equipped with mechanical compartment door lock, can't be interlocked with another circuit breaker**
**(1) To be ordered with cable kit for interlock and plate for interlock consistent with the circuit breaker**

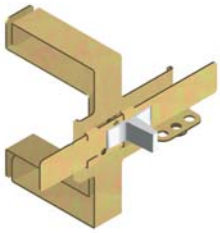

### Mechanical interlock MIF - T1...T3
### CSA / UL listed

| Type | Part number T1...T3 |
|---|---|
| Front interlock piece for 2 circuit breakers | KT3MIF2 |
| Front interlock piece for 3 circuit breakers | KT3MIF3 |

### Mechanical interlock MIR - T3...Ts3
### CSA / UL listed

| Type | Part number | |
|---|---|---|
| | T3 | Ts3 |
| Cable kit | KT3MI-H | KTs3MI-H |
| Plate for fixed unit (on rear plate) | KT3MI-V | KTs3MI-V |

# Tmax molded case circuit breakers
## Mechanical accessories

### Mechanical interlock MIR - T4...T5
### CSA / UL listed

| Type | Part number T4...T5 |
|---|---|
| Horizontal interlock | KT5MI-H |
| Vertical interlock | KT5MI-V |
| Interlock plate Type A T4 (FPW) + T4 (FPW | KT5MIP-A |
| Interlock plate Type B T4 (FPW) + T5 400 (FPW) or T5 600 (F) | KT5MIP-B |
| Interlock plate Type C T4 (FPW) + T5 600 (PW) | KT5MIP-C |
| Interlock plate Type D T5 400 (FPW) or T5 600 (F) + T5 400 (FPW) or T5 600 (F) | KT5MIP-D |
| Interlock plate Type E T5 400 (FPW) or T5 600 (F) + T5 600 (PW) | KT5MIP-E |
| Interlock plate Type F T5 600 (PW) + T5 600 (PW) | KT5MIP-F |

**Note: to interlock 2 circuit breakers you have to order a frame unit interlock (H or V) and the interlock plate**

### Mechanical interlock MIR - T6
### CSA / UL listed

| Type | Part number T6 |
|---|---|
| Horizontal interlock | KT6MI-H |
| Vertical interlock | KT6MI-V |

### Mechanical interlock with cables between 2 circuit breakers - T7 / T7M
### CSA / UL listed

| Type | Part number T7...T7M |
|---|---|
| Cable kit | KT7XMLC |
| Plate for fixed unit (on rear plate) | KT7XIPB |
| Wiring kit for interlock with Emax | KT7XCI |
| Plate for FIXED type | KT7XMLPW |
| Plate for DRAW-OUT type | KT7XMLPF |

**Note: to interlock 2 circuit breakers you have to order a cable kit and 2 plates in function of the version of the circuit breaker**

### IP54 door protection - T7M...T8

| Type | Part number | |
|---|---|---|
| | T7M | T8 |
| IP54 protection door | KT7XDC | KT8EDC |

# Tmax molded case circuit breakers
## Mechanical accessories

### Din rail adapters - T1...T3

| Type | Part number | |
|---|---|---|
| | T1...T2 | T3 |
| 35mm din rail adapter | KT2DIN | KT3DIN |

### Din rail adapters - Ts3

| Type | Part number |
|---|---|
| | Ts3 |
| 75mm din rail adapter | KTs3DMB |

### High insulating terminal covers (kit of 2) HTC - T1...T7

| Breaker type | Part number | |
|---|---|---|
| | 3 poles | 4 poles |
| T1 | KT1HTC-3 | KT1HTC-4 |
| T2 | KT2HTC-3 | KT2HTC-4 |
| T3 | KT3HTC-3 | KT3HTC-4 |
| Ts3 | KTs3HTC-3 | KTs3HTC-4 |
| T4 | KT4HTC-3 | KT4HTC-4 |
| T5 | KT5HTC-3 | KT5HTC-4 |
| T6 | KT6HTC-3 | KT6HTC-4 |
| T7...T7M | KT7XHTC-3 | KT7XHTC-4 |

### Low insulating terminal covers (kit of 2) LTC - T1...T7

| Breaker type | Part number | |
|---|---|---|
| | 3 poles | 4 poles |
| T1 | KT1LTC-3 | KT1LTC-4 |
| T2 | KT2LTC-3 | KT2LTC-4 |
| T3 | KT3LTC-3 | KT3LTC-4 |
| Ts3 | KTs3LTC-3 | KTs3LTC-4 |
| T4 | KT4LTC-3 | KT4LTC-4 |
| T5 | KT5LTC-3 | KT5LTC-4 |
| T6 | KT6LTC-3 | KT6LTC-4 |
| T7...T7M | KT7XLTC-3 | KT7XLTC-4 |

### Sealable screws for terminal covers - T1...T7M

| Type | Part number | |
|---|---|---|
| | T1...T5 | T6...T7M |
| Sealable screws | KT5LC-S | K6LC-S |

### Sealable screws for terminal covers - Ts3

| Type | Part number |
|---|---|
| | Ts3 |
| Sealable screws | KT6LC-S |

# Tmax molded case circuit breakers
## Mechanical accessories

### Phase barriers PB - T1...T7M

| Type | Part number | | | |
|---|---|---|---|---|
| | T1...T3 | T4...T5 | T6 | T7...T7M |
| Low - 4 pieces (for 3 pole circuit breakers) | KT3PBL-3 | KT5PBL-3 | KT6PBL-3 | KT7PBL-3 |
| High - 4 pieces (for 3 pole circuit breakers) | KT3PBH-3 | KT5PBH-3 | - | KT7PBH-3 |
| Low - 6 pieces (for 4 pole circuit breakers) | KT3PBL-4 | KT5PBL-4 | KT6PBL-4 | KT7PBL-4 |
| High - 6 pieces (for 4 pole circuit breakers) | KT3PBH-4 | KT5PBH-4 | - | KT7PBH-4 |

### Phase barriers PB - T8 (Required for lugs)

| Type | Part number |
|---|---|
| | T8 |
| Low - 2 pieces (for 3 pole circuit breakers) | KT8PBL-3 |
| High - 2 pieces (for 3 pole circuit breakers) | KT8PBH-3 |
| Low - 3 pieces (for 4 pole circuit breakers) | KT8PBL-4 |
| High - 3 pieces (for 4 pole circuit breakers) | KT8PBH-4 |

### Front terminals for copper / aluminium cables FC CuAl - T1...T8 CSA / UL listed

| Breaker type | Part number | |
|---|---|---|
| | 3 poles | 4 poles |
| T2 100 A (14 AWG - 1/0) | KT2100-3 | KT2100-4 |
| T3 100 A (14 AWG - 1/0) | KT3100-3 | KT3100-4 |
| T3 225 A (4 AWG - 350 kcmil) | KT3225-3 | KT3225-4 |
| Ts3 100 A (14 AWG - 1/0) | KTs3100-3 | KTs3100-4 |
| Ts3 150 A (2 AWG - 4/0) | KTs3150-3 | KTs3150-4 |
| Ts3 225 A (4 AWG - 300 kcmil) | KTs3225-3 | KTs3225-4 |
| T4 100 A (14 AWG - 1/0) | KT4100-3 | KT4100-4 |
| T4 250 A (6 AWG - 350 kcmil) | KT4250-3 | KT4250-4 |
| T5 300 A (250 kcmil - 500 kcmil) | KT5300-3 | KT5300-4 |
| T5 400 A (2x 3/0 - 2x 250 kcmil) (1) | KT5400-3 | KT5400-4 |
| T5 600 A (2x 3/0 - 2x 500 kcmil) | KT5600-3 | KT5600-4 |
| T6 600 A (2x 250 kcmil - 2x 500 kcmil) | KT6600-3 | KT6600-4 |
| T6 800 A (3x 2/0 - 3x 400 kcmil) (1) | KT6800-3 | KT6800-4 |
| T7...T7M 1200 A (4x 4/0 - 4x 500 kcmil) | KT7X1200-3 | KT7X1200-4 |
| T8 1600 A (4x 1/0 - 4x 750 kcmil) | K8TL | - |
| T8 2500 A (6x 1/0 - 6x 750 kcmil) | K8TM | - |

**Note: 1 kit consists of 3 lugs for 3 pole and 4 lugs for 4 pole. 2 kits required per breaker for line and load connection**
**(1) Comes with high profile terminal covers**

### Front extended terminals EF - T1...T7M

| Breaker type | Part number | |
|---|---|---|
| | 3 poles | 4 poles |
| T2 | KT2EF-3 | KT2EF-4 |
| T3 | KT3EF-3 | KT3EF-4 |
| Ts3 | KTs3EF-3 | KTs3EF-4 |
| T4 | KT4EF | KT4EF-4 |
| T5 | KT5EF | KT5EF-4 |
| T6 800 A | KT6EF-3 | KT6EF-4 |
| T7...T7M | KT7EF-3 | KT7EF-4 |

**Note: 1 kit consists of 3 lugs for 3 pole and 4 lugs for 4 pole. 2 kits required per breaker for line and load connection**

# Tmax molded case circuit breakers
## Mechanical accessories

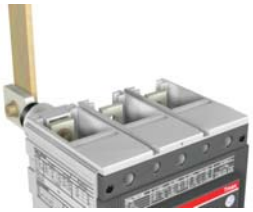

### Rear terminals R - T2...T7M

| Breaker type | Part number | |
|---|---|---|
| | 3 poles | 4 poles |
| T2 | KT2R-3 | KT2R-4 |
| T3 | KT3R-3 | KT3R-4 |
| Ts3 | KTs3R-3 | KTs3R-4 |
| T4 | KT4R-3 | KT4R-4 |
| T5 | KT5R-3 | KT5R-4 |
| T6 800 A | KT6R-3 | KT6R-4 |
| T7...T7M | KT7XR-3 | KT7XR-4 |

**Note: 1 kit consists of 3 lugs for 3 pole and 4 lugs for 4 pole. 2 kits required per breaker for line and load connection**

### Rear "T" terminals - T8

| Breaker type | Part number | |
|---|---|---|
| | Kit of 6 | Kit of 8 |
| T8 (2500 A max) | KT8VR2500 | KT8VR2500-4 |

### Rear flat horizontal terminals HR - T7 / T7M

| Breaker type | Part number | |
|---|---|---|
| | 3 poles | 4 poles |
| T7...T7M | KT7XHR-3 | KT7XHR-4 |

**Note: 1 kit consists of 3 lugs for 3 pole and 4 lugs for 4 pole. 2 kits required per breaker for line and load connection**

### Rear flat vertical terminals HR - T7 / T7M

| Breaker type | Part number | |
|---|---|---|
| | 3 poles | 4 poles |
| T7...T7M | KT7XVR-3 | KT7XVR-4 |

**Note: 1 kit consists of 3 lugs for 3 pole and 4 lugs for 4 pole. 2 kits required per breaker for line and load connection**

### Front terminal adapters (6 plugs and 6 screws) F - T2...T7M

| Breaker type | Part number |
|---|---|
| | T2...T7M |
| T2 | KT2FC-6 |
| T3 | KT3FC-6 |
| Ts3 | KTs3FC-6 |
| T4 | KT4FC-6 |
| T5 | KT5FC-6 |
| T6 | KT6FC-6 |
| T7...T7M | KT7XF-6 |

**Note: to be requested as loose kit only.**

# Tmax molded case circuit breakers
## Mechanical accessories


### Front display unit FDU - T4...T6

| Type | Part number | |
|---|---|---|
| | T4...T5 | T6 |
| Front display unit for PR222 | KT5FDU | KT6FDU |

### Modules for PR33x electronic trip units - T7...T8
### UL / CSA listed

| Type | Part number | | |
|---|---|---|---|
| | T7 | T7M | T8 |
| PR330/V voltage measuring module [1] | KT7PR330V | KT7XPR330V | KT8PR330V-3 |
| PR330/V voltage measuring module for 4P [1] | - | - | KT8PR330V-4 |
| PR330/D-M Modbus RTU communication module [1] | KT8330DMOD | KT8330DMOD | KT8330DMOD |
| PR330/R actuator module [1] | 1SDA063146R1 | 1SDA063146R1 | - |
| BT030 external bluetooth device | 1SDA058259R1 | 1SDA058259R1 | 1SDA058259R1 |
| PR030B battery unit | 1SDA058258R1 | 1SDA058258R1 | 1SDA058258R1 |

**(1) Can't be ordered loose. To be assembled at factory**

# Tmax molded case circuit breakers
## Spare parts


### Rating plug - T7...T8

| Plug type | Part number | |
|---|---|---|
| | T7...T7M | T8 |
| In = 400 A | KT70400RP | - |
| In = 600 A | KT70600RP | - |
| In = 800 A | KT70800RP | - |
| In = 1000 A | KT71000RP | KT81000RP |
| In = 1200 A | KT71200RP | KT81200RP |
| In = 1600 A | - | KT81600RP |
| In = 2000 A | - | KT82000RP |
| In = 2500 A | - | KT82500RP |
| In = 3000 A | - | KT83000RP |

### Flange for compartment door - T1...T6

| Type | Part number | | |
|---|---|---|---|
| | T1...T3 | T4...T5 | T6 |
| Flange for compartment door for fixed version | KT3FCD | KT5FCD | KT6FCD |

### Flange for compartment door - T7...T8

| Type | Part number | |
|---|---|---|
| | T7...T7M | T8 |
| Flange for compartment door for fixed version | KT7XFCD | KT8FCD |

# Contact us

**ABB Canada**
2117, 32e Avenue
Lachine, QC  H8T 3J1
Tel: 514-420-3100
Toll free: 1-800-567-0283
Fax: 514-420-3137

Website: www.abb.ca



1SXP210001C0201_AC1615S / March 2012